Fireplace Products International, Ltd.

Project # 23-229
Branding: Alterra Pro I3000 Series
Model(s): I3000R, I3000A
Type: Catalytic Wood Fired Fireplace Insert
February 5, 2024
Revised: October 3, 2024

ASTM E2780 Standard Test Method for Determining Particulate Matter Emissions from Wood Heaters
EPA Test Method 28R for Certification and Auditing of Wood Heaters

Contact: David Lal
6988 Venture St.
Delta, BC V4G 1H4, Canada
dlal@regency-fire.com
604-946-5155

Prepared by: Aaron Kravitz,
Testing Supervisor

11785 SE Highway 212 – Suite 305
Clackamas, OR 97015-9050
(503) 650-0088
WWW.PFSTECO.COM

Revision Summary

Date: February 5, 2024 – Original Issue

Date: (Report Date) May 31, 2024 – Revised the following items at the request of EPA:

- Added note and diagram explaining the use of three different fuel piece lengths, see page 4.
- Added negative catch weight discussion and uncorrected result to run narrative for run 5 & 9, see pages 8 & 9.
- Corrected sample weight typo and updated Run 5 1st hour emissions results, see page 7 and Appendix A.
- Updated firebox volume calculations to specify total & usable firebox volume, see page 13 and included email Re “i3000 Firebox volume.pdf; Maximum Fuel length.pdf”- see Communication folder of CBI Report.
- Replaced out of date calibration certificate for temperature data logger #215, see Appendix C
- Removed out of date barometer calibration certificate from Appendix C. Added note on page 6 clarifying that NWS data was used for barometric pressure readings, not a local barometer.
- Updated Owners’ Manual (page 33) to include required combustor inspection language, see Appendix B.

Date: (Report Date) October 3, 2024

- Updated Branding and model for unit - Alterra Pro I3000 series. Labels and Manual updated. See Appendix B and updated Non-CBI Report.

Contents

Affidavit 3
Introduction 4
Notes 4
Wood Heater Identification and Testing 5
Test Procedures and Equipment 6
Results 7
Summary Table 7
Test Run Narrative 7
Run 1 8
Run 2 8
Run 3 8
Run 4 8
Run 5 8
Run 6 9
Run 7 9
Run 8 9
Run 9 9
Test Conditions Summary 10
Appliance Operation and Test Settings 11
Settings & Run Notes 11
Appliance Description 12
Test Fuel Properties 16
Sampling Locations and Descriptions 17
Sampling Methods 18
Analytical Methods Description 18
Calibration, Quality Control and Assurances 18
Appliance Sealing and Storage 18
Sealing Label 18
Sealed Unit 19
List of Appendices 20

Affidavit

PFS-TECO was contracted by Fireplace Products International (FPI) to provide testing services for the I3000R Catalytic Wood-Fired Room Heater per EPA Method 28R, *Certification and Auditing of Wood Heaters*. All testing and associated procedures were conducted at PFS-TECO's Portland Laboratory beginning on 11/27/2023 and ending on 12/22/2023. PFS-TECO's Portland Laboratory is located at 11785 SE Highway 212 – Suite 305, Clackamas, Oregon 97015. Testing procedures followed EPA Method 28R and ASTM E2780, *Standard Test Method for Determining Particulate Matter Emissions from Wood Heaters*. Particulate sampling was performed per ASTM E2515, *Standard Test Method for Determination of Particulate Matter Emissions Collected by a Dilution Tunnel*.

PFS-TECO is accredited by the U.S. Environmental Protection Agency for the certification and auditing of wood heaters pursuant to subpart AAA of 40 CFR Part 60, New Source Performance Standards for Residential Wood Heaters and subpart QQQQ of 40 CFR Part 60, Standards of Performance for New Hydronic Heaters and Forced Air Furnaces, Methods 28R, 28WHH, 28 WHH-PTS, and all methods listed in Sections 60.534 and 60.5476. PFS-TECO holds EPA Accreditation Certificate Numbers 4 and 4M (mobile). PFS-TECO is accredited by IAS to ISO 17020:2012 "Criteria for Bodies Performing Inspections", and ISO 17025:2017 "Requirements for Testing Laboratories." PFS-TECO is also accredited by Standards Council of Canada to ISO 17065:2012 "Requirements for Bodies Operating Product Certification Systems."

The following people were associated with the testing, analysis and report writing associated with this project.

Aaron Kravitz, Testing Supervisor

Introduction

FPI contracted with PFS-TECO to perform EPA certification testing on the I3000R Wood-Fired Room Heater. All testing was performed at PFS-TECO's Portland Laboratory. All testing was performed by Aaron Kravitz.

Notes

- Prior to start of testing, 50 hours of conditioning was performed by the manufacturer at a medium burn setting in accordance with ASTM E2780.
- Prior to start of testing, the dilution tunnel was cleaned with a steel brush.
- A separate, independent, third filter train was utilized to determine 1st hour emissions for all test runs.
- A total of 9 test runs were completed. Three initial test runs were found to be invalid. Of the six valid runs, one test run in each of the 4 specified burn rate categories, as well as an additional run in category 2 burn rate, and a fan confirmation test also performed at a category 2 burn rate. All runs other than the initial three have been found to be appropriate, no anomalies occurred. See the Run Narrative section for further detail on each run.
- The unconventional shape of the firebox required the use of 3 separate fuel piece lengths, each based on the maximum length of log that may be placed in that position of the firebox. In the front, 24" is the maximum log length, so 20" fuel pieces were used. In the middle, the max length is 22.25", so 18.5" pieces were used. The rear of the firebox is 20.375" wide, so fuel pieces placed at the rear of the firebox were 17" long. The below drawing shows the maximum log length at the front of the firebox:

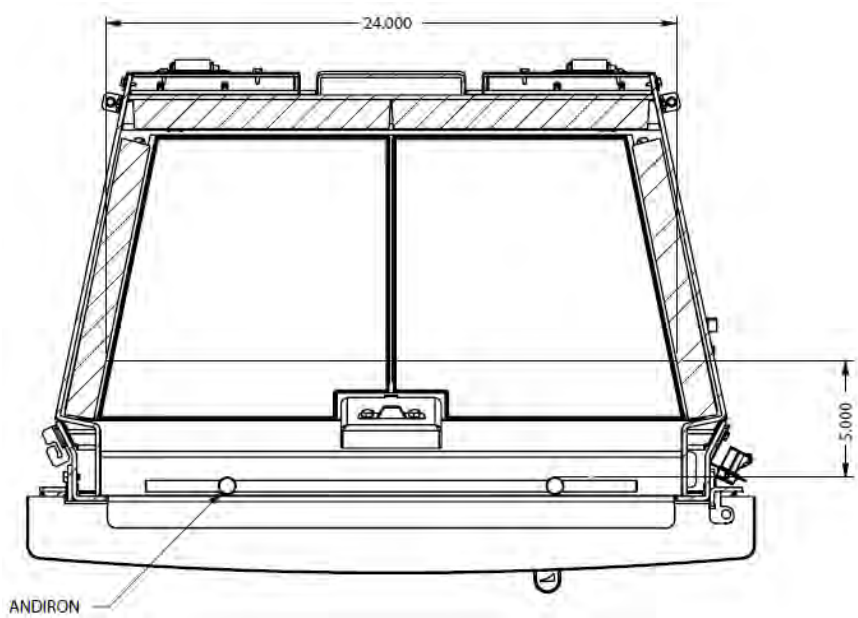

Wood Heater Identification and Testing

- Appliance Tested: ***I3000R***
- Serial Number: ***PFS Tracking Number 169***
- *Manufacturer:* ***FPI***
- Catalyst: ***Yes***
- Heat exchange blower: ***Optional***
- Type: ***Wood Stove***
- Style: ***Free Standing Wood Stove***
- Date Received: ***Monday, November 20, 2023***
- Testing Period – Start: ***Monday, November 27, 2023***
  Finish: ***Friday, December 22, 2023***
- Test Location: ***PFS TECO***
  11785 SE Hwy 212
  Clackamas, OR 97015
- Elevation: ***~131 Feet above sea level***
- Test Technician(s): ***Aaron Kravitz***
- Observers: ***None***

Test Procedures and Equipment

All Sampling and analytical procedures were performed by Aaron Kravitz. All procedures used are directly from ASTM E2780 and ASTM E2515. See the list below for equipment used. See Appendix C submitted with this report for calibration data.

Equipment List:

Equipment ID#	Equipment Description
50	Digiweigh DWP12i Platform Scale
53	APEX XC-60-ED Digital Emissions Sampling Box A
54	APEX XC-60-ED Digital Emissions Sampling Box B
203	APEX XC-50-DIR Digital Emissions Sampling Box C
55	Apex Ambient Air Sample Box
57	California Analytical ZRE CO2/CO/O2 IR ANALYZER
94	Moisture meter calibration block
95	Anemometer
97	10 lb audit weight
107	Sartorius Analytical Balance
109A/B	Troemner 100mg/200mg Audit Weights
111	Microtector
115	Delmhorst Wood Moisture Meter
189	Mettler 3'x3' floor scale w/digital weight indicator
202	Digital Barometer
207	Dewalt Tape Measure
208	Digital Calipers
215	Temperature Logger
CC505834	Gas Analyzer Calibration Span Gas
CC139173	Gas Analyzer Calibration Mid Gas

Barometric pressure data was taken from local National Weather Service station KPDX. As PFS and KPDX are at the same altitude, the correction for altitude per ASTM E2515 6.1.2 is 1:1.

Results

A total of 9 test runs were performed on the I3000R. Runs #1 through #3 were found to be invalid due to tunnel velocity, and are not used in the weighted average. Run #9, a fan confirmation test, was not used in any weighted average results calculations. The weighted average emissions rate for the 5 run test series was measured to be **0.95 g/hr** with a Higher Heating Value efficiency of **78%.** The average CO emission rate for the 4 tests was **0.44 g/min.** The FPI I3000R Wood-Fired Room Heater meets the 2020 cribwood PM emission standard of ≤ 2.0 g/hr per CFR 40 part 60, §60.532 (b).

Detailed individual run data can be found in Appendix A submitted with this report.

Summary Table

	Cat. 2 ≤1.00 kg/hr	Cat. 2 0.80 - 1.25 kg/hr	Cat. 2 0.80 - 1.25 kg/hr	Cat. 3 1.25 - 1.90 kg/hr	Cat. 4 Max Burn Rate	Fan Confirmation (Cat. 2)*
Date	12/18/2023	11/30/2023	12/19/2023	12/21/2023	12/20/2023	12/22/2023
Run Number	5	4	6	8	7	9
Emission Rate (g/hr)	0.70	0.65	1.13	1.30	1.00	0.74
Burn Rate (kg/hr)	0.94	1.19	1.22	1.74	2.44	1.17
Heat Output (Btu/hr)	13,794	17,338	17,742	24,863	33,155	16,861
Overall Efficiency (% HHV)	79%	79%	78%	77%	73%	78%
CO Emissions (g/MJ Output)	1.66	1.04	0.44	0.31	2.08	1.57
CO Emissions (g/kg Dry Fuel)	25.89	16.20	6.74	4.75	30.23	24.13
CO Emissions (g/min)	0.40	0.32	0.14	0.14	1.21	0.46
Emissions – 1st hr (g/hr)	3.80	3.03	3.09	3.08	3.70	1.94
Weighted particulate emission average of 5 test runs: 0.95 grams per hour.						
Weighted average HHV efficiency of 5 test runs: 78%.						
Average CO Emissions Rate: 0.44 g/min						

*Fan Confirmation test not included in weighted average calculations.

Test Run Narrative

Run 1

Run 1 was performed on 11/27/23 as an attempted category 1 test, per EPA Method 28R. The total test time was 401 minutes. The particulate emissions rate for the test was 1.63 g/hr, the burn rate was 0.99 kg/hr with an HHV efficiency of 80.5%. This test was deemed invalid due to dilution tunnel velocity, which at 455 ft/min was less than the 800 ft/min required by section 9.2.1 of ASTM E2515. This test's results are not included in the weighted average.

Run 2

Run 2 was performed on 11/28/2023 as a category 4 test, per EPA Method 28R. The total test time was 165 minutes. The particulate emissions rate for the test was 1.02 g/hr, the burn rate was 2.41 kg/hr with an HHV efficiency of 74.6%. This test was deemed invalid due to dilution tunnel velocity, which at 450 ft/min was less than the 800 ft/min required by section 9.2.1 of ASTM E2515. This test's results are not included in the weighted average.

Run 3

Run 3 was performed on 11/29/2023 as a category 3 test, per EPA Method 28R. The total test time was 249 minutes. The particulate emissions rate for the test was 0.93 g/hr, the burn rate was 1.64 kg/hr with an HHV efficiency of 78.4%. This test was deemed invalid due to dilution tunnel velocity, which at 462 ft/min was less than the 800 ft/min required by section 9.2.1 of ASTM E2515. This test's results are not included in the weighted average.

Run 4

Run 4 was performed on 11/30/2023 as a category 2 test, per EPA Method 28R. The total test time was 337 minutes. The particulate emissions rate for the test was 0.65 g/hr, the burn rate was 1.19 kg/hr with an HHV efficiency of 79.0%. All test results were appropriate and valid. There were no anomalies and all test criteria were met.

Run 5

Run 5 was performed on 12/18/2023 as an attempted category 1 test, per EPA Method 28R. The total test time was 448 minutes. The particulate emissions rate for the test was 0.70 g/hr, the burn rate was 0.94 kg/hr with an HHV efficiency of 78.7%. All test results were appropriate and valid. There were no anomalies and all test criteria were met. This test meets the burn rate requirements described in EPA Method 28 Section 8.1.1.3.2 as a category 2 test with a burn rate of 1.00 kg/hr or less for wood stoves that cannot be operated at burn rates less than 0.8 kg/hr. This test was performed with the air control set to its lowest setting, it is not possible to operate the stove at a lower air setting. Therefore, this test will be used in lieu of a category 1 test. A negative gasket catch weight

was observed in Train A and corrected to 0 for reporting of results. If left uncorrected, the emissions result is still 0.70 g/hr.

Run 6

Run 6 was performed on 12/19/2023 as a category 2 test, per EPA Method 28R. The total test time was 335 minutes. The particulate emissions rate for the test was 1.13 g/hr, the burn rate was 1.22 kg/hr with an HHV efficiency of 78.1%. All test results were appropriate and valid. There were no anomalies and all test criteria were met.

Run 7

Run 7 was performed on 12/20/2023 as a category 4 test, per EPA Method 28R. The total test time was 172 minutes. The particulate emissions rate for the test was 1.00 g/hr, the burn rate was 2.44 kg/hr with an HHV efficiency of 73.2%. All test results were appropriate and valid. There were no anomalies and all test criteria were met.

Run 8

Run 8 was performed on 12/21/2023 as a category 3 test, per EPA Method 28R. The total test time was 235 minutes. The particulate emissions rate for the test was 1.30 g/hr, the burn rate was 1.74 kg/hr with an HHV efficiency of 77.2%. All test results were appropriate and valid. There were no anomalies and all test criteria were met.

Run 9

Run 5 was performed on 12/22/2023 as a category 2 fan confirmation test, per EPA Method 28R. The total test time was 343 minutes. The particulate emissions rate for the test was 0.74 g/hr with a burn rate of 1.17 kg/hr. All test results were appropriate and valid. There were no other anomalies and all test criteria were met. Since the particulate emissions rate is within 1.0 g/hr of the category 2 test, the blower is determined not to have a significant impact on emissions performance and may therefore be approved as an optional accessory. This test run is not included in the weighted average calculations presented in the results summary. A negative gasket catch weight was observed in Train C and corrected to 0 for reporting of results. If left uncorrected, the first hour emissions result is 1.64 g/hr, rather than 1.93 g/hr.

Test Conditions Summary

Testing conditions for all runs fell within allowable specifications of the ASTM 2780 and ASTM E2515. A summary of facility conditions, fuel burned, and run times are listed below.

Run	Ambient (°F)		Relative Humidity (%)		Average Barometric Pressure (In. Hg.)	Preburn Fuel Weight (lbs)	Test Fuel Weight (lbs)	Test Fuel Moisture (%DB)	Test Run Time (Min)
	Pre	Post	Pre	Post					
1	70	77.4	40.9	33.9	29.81	29.45	31.26	21.0	635
2	76	75.9	37.7	42.5	29.83	29.1	30.47	20.4	775
3	73	78.4	32.9	34.7	30.00	27.65	31.33	20.2	276
4	78	82.8	33.6	21.4	29.73	29.7	30.97	21.3	468
5	62	64.6	36.1	29.8	29.56	16.76	18.67	21.3	448
6	73	68.7	35.6	28.8	29.62	17.64	18.21	22.3	335
7	71	72	28.8	29.2	29.77	18.52	18.91	23.5	172
8	69	68.7	26.6	32.7	29.90	19.27	18.34	22.0	235
9	64	65.5	26.6	32.7	29.90	18.3	17.73	21.3	343

Appliance Operation and Test Settings

The appliance was operated according to procedures as described in the Operations Manual, found in Appendix B submitted with this report. Detailed run information can be found in Appendix A submitted with this report.

Settings & Run Notes

	Pre-Burn Air Setting	Test Run Air and Fan Settings
Run 1	Air control fully closed	Air control fully closed, fan on low
Run 2	Air control fully open	Air control fully open, fan on high
Run 3	Air control open 0.516”	Air control open 0.516”, fan on high
Run 4	Air control open 0.232”	Air control open 0.232”, fan on low
Run 5	Air control fully closed	Air control fully closed, fan on low
Run 6	Air control open 0.232”	Air control open 0.232”, fan on low
Run 7	Air control fully open	Air control fully open, fan on high
Run 8	Air control open 0.516”	Air control open 0.516”, fan on high
Run 9	Air control open 0.232”	Air control open 0.232”, fan off (fan confirmation)

Appliance Description

Branding: Alterra Pro I3000 Series

Model(s): I3000R, I3000A

Appliance Type: Catalytic Wood-Fired Fireplace Insert

Total/Usable Firebox Volume: 2.75 ft^3

Model Variants: The I3000R is available in one additional variant, the I3000A. The I3000A features an arched door and fascia while the I3000R features a rectangular door and fascia. This difference is exclusively aesthetic and does not impact emissions performance.

Air Introduction System Primary combustion air enters the appliance through the air control opening located on the bottom front of the stove. Air is routed up the sides of the firebox, then down into the combustion chamber in front of the door glass. Secondary air brought in through a fixed opening on the bottom rear of the appliance and is routed up the back of the firebox and feed into a secondary air tube. Dimensions on all these features can be found in Appendix D.

Baffles: Combustion air is routed to the front of the stove with a steel baffle that sits on top of the secondary air tubes, then back and through the catalytic combustor.

Catalytic Combustor: A 24” x 2.5”, 3” thick metallic substrate catalyst is located in the flue gas path just prior to the flue collar. A bypass door located in the baffle is actuated via a handle located on the left side of the appliance. When the handle is pulled forward, the bypass plate opens allowing flue gasses to exit the firebox directly into the flue. When pushed back, all flue gasses are routed through the catalyst. The appliance also features a catalyst temperature monitoring probe on the top of the appliance, the temperature probe tip is located within 1” of the catalyst exit.

Combustor Temperature Monitoring System: The I3000R uses a novel catalytic combustor temperature monitoring system. The system replaces a display showing temperature with a red LED that has three display states: off, inactive, and active. The ‘active’ state is displayed when the combustor is within its ideal operating range. The temperature sensor location is unchanged from the prior system. EPA has approved the use of this system in an email dated January 25, 2024. This email is shown in Appendix A.

Refractory Insulation: The firebox is lined with 1.25” thick high-density firebrick.

Flue Outlet: 6-inch exhaust outlet located on the top of the appliance.

Fan: A variable speed convection fan is mounted to the front of the appliance.

Appliance design drawings can be found in Appendix D submitted with the CBI copy of this report.

Firebox Volume Calculation

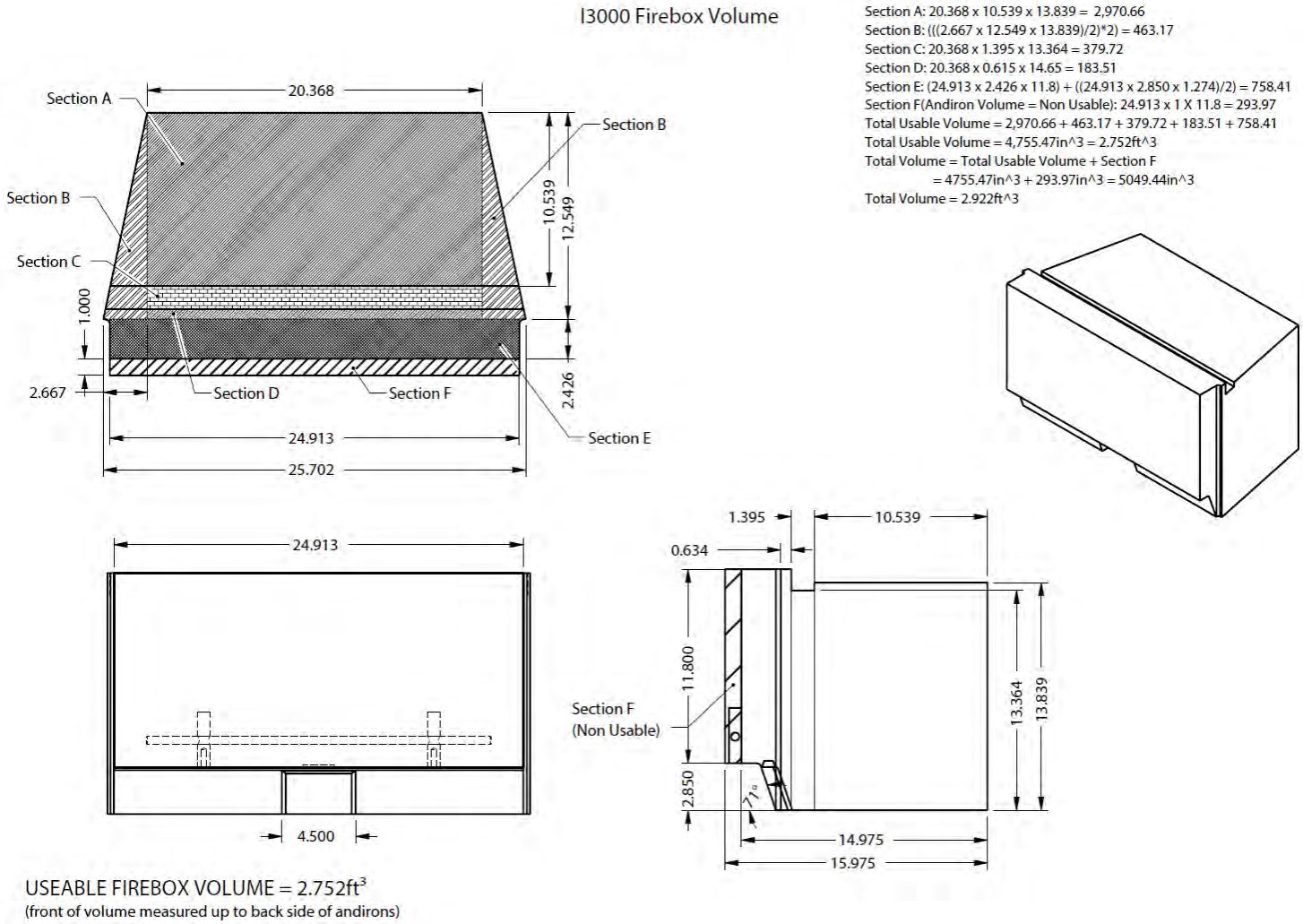

USEABLE FIREBOX VOLUME = 2.752ft^3
(front of volume measured up to back side of andirons)

Appliance Front

Appliance Left

Appliance Right

Appliance Rear

Test Fuel Properties

Test fuel used was Douglas Fir dimensional lumber, air-dried to the specified moisture content range. A typical fuel load is pictured below:

Typical Fuel Load

Sampling Locations and Descriptions

Sample ports are located 16.5 feet downstream from any disturbances and 3.5 feet upstream from any disturbances. Flow rate traverse data was collected 8 feet downstream from any disturbances and 4 feet upstream from any disturbances. (See below).

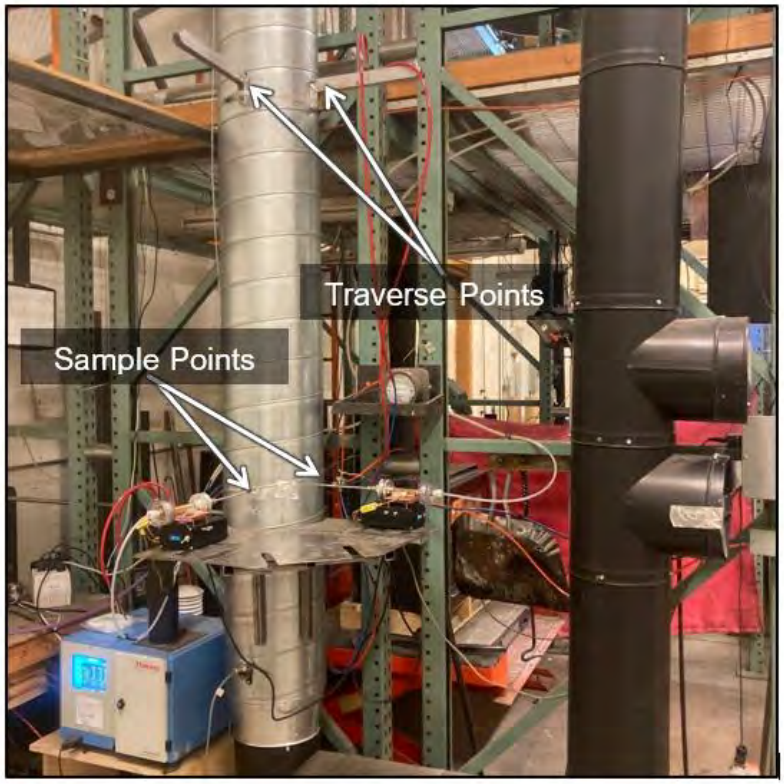

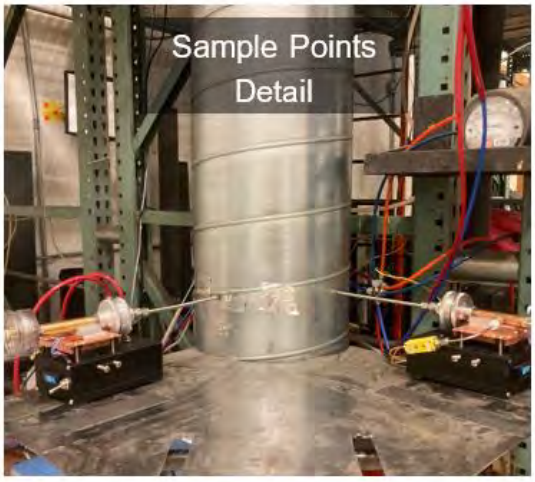

Sampling Methods

ASTM E2515 was used in collecting particulate samples. For runs 1 through 4, the dilution tunnel was 12 inches in diameter. For runs 5 through 9, the dilution tunnel was 6 inches in diameter All sampling conditions per ASTM E2515 were followed. No alternate procedures were used.

Analytical Methods Description

All sample recovery and analysis procedures followed ASTM E2515 procedures. At the end of each test run, filters, O-Rings and probes were removed from their housings dessicated for a minimum of 24 hours, and then weighed in pairs at 6 hour intervals to a constant weight per ASTM E2515-11 Section 10.

Calibration, Quality Control and Assurances

Calibration procedures and results were conducted per EPA Method 28R and ASTM E2515-11. Test method quality control procedures (leak checks, volume meter checks, stratification checks, proportionality results) followed the procedures outlined.

Appliance Sealing and Storage

Upon completion of testing, the appliance was secured with metal strapping and the seal below was applied, the appliance was then returned to the manufacturer's location at: 6988 Venture St, Delta, BC V4G 1H4, Canada, for archival.

Sealing Label

ATTENTION:

THIS SEAL IS NOT TO BE BROKEN WITHOUT PRIOR AUTHORIZATION FROM THE UNITED STATES ENVIRONMENTAL PROTECTION AGENCY.

THIS APPLIANCE HAS BEEN SEALED INACCORDANCE WITH REQUIREMNTS OF 40CFR PART 60 SUBPART AAA §60.535 (a)(2)(vii)

REPORT #_____ DATE SEALED_____

MANUFACTURER_____ MODEL #_____

Sealed Unit

ATTENTION
THIS SEAL IS NOT TO BE BROKEN WITHOUT PRIOR AUTHORIZATION FROM THE UNITED STATES ENVIRONMENTAL PROTECTION AGENCY.
THIS APPLIANCE HAS BEEN SEALED IN ACCORDANCE WITH THE REQUIREMENTS OF 40 CFR PART 60 SUBPART AAA §60.535 (b)(7)(iii).
REPORT NUMBER: 23-229
DATE SEALED: 11/13/23
MANUFACTURER: I-UP
MODEL: I3000

List of Appendices

The following appendices have been submitted electronically in conjunction with this report:

Appendix A – Run Data, Communications, Notes, and Sample Analysis -Page 22

Appendix B – Labels and Manuals – page 402 Non-CBI PDF

Appendix C –Equipment Calibration Records – Page 464 Non-CBI PDF

Appendix D – Design Drawings (CBI Report Only)

Appendix E – Manufacturer QAP (CBI Report Only)

Appendix A: Test Run Data

EPA Method 28R Weighted Average Emissions

Client: FPI
Stove Model: I3000
Test Dates: 11/30/23 - 12/21/23
Job Number: 23-229

Signature/Date:

Weighted Average Particulate Emissions (g/hr):	**0.95**
Weighted Average HHV Efficiency (%):	**77.8%**
Weighted Average LHV Efficiency (%):	**84.0%**
Average CO Emissions (g/min):	**0.44**

Individual Run Summaries

Run Number:	5
Burn Rate (dry kg/hr):	0.94
Emissions Rate (g/hr):	0.70
HHV Efficiency (%):	78.7%
LHV Efficiency (%):	85.0%
Weighting Percentage (%):	32.89%

Run Number:	4
Burn Rate (dry kg/hr):	1.19
Emissions Rate (g/hr):	0.65
HHV Efficiency (%):	79.0%
LHV Efficiency (%):	85.4%
Weighting Percentage (%):	14.45%

Run Number:	6
Burn Rate (dry kg/hr):	1.22
Emissions Rate (g/hr):	1.13
HHV Efficiency (%):	78.1%
LHV Efficiency (%):	84.4%
Weighting Percentage (%):	19.29%

Run Number:	8
Burn Rate (dry kg/hr):	1.74
Emissions Rate (g/hr):	1.30
HHV Efficiency (%):	77.2%
LHV Efficiency (%):	83.5%
Weighting Percentage (%):	24.43%

Run Number	7
Burn Rate (dry kg/hr)	2.44
Emissions (g/hr)	1.00
HHV Efficiency (%)	73.2%
LHV Efficiency (%)	79.1%
Weighting Percentage (%):	8.95%

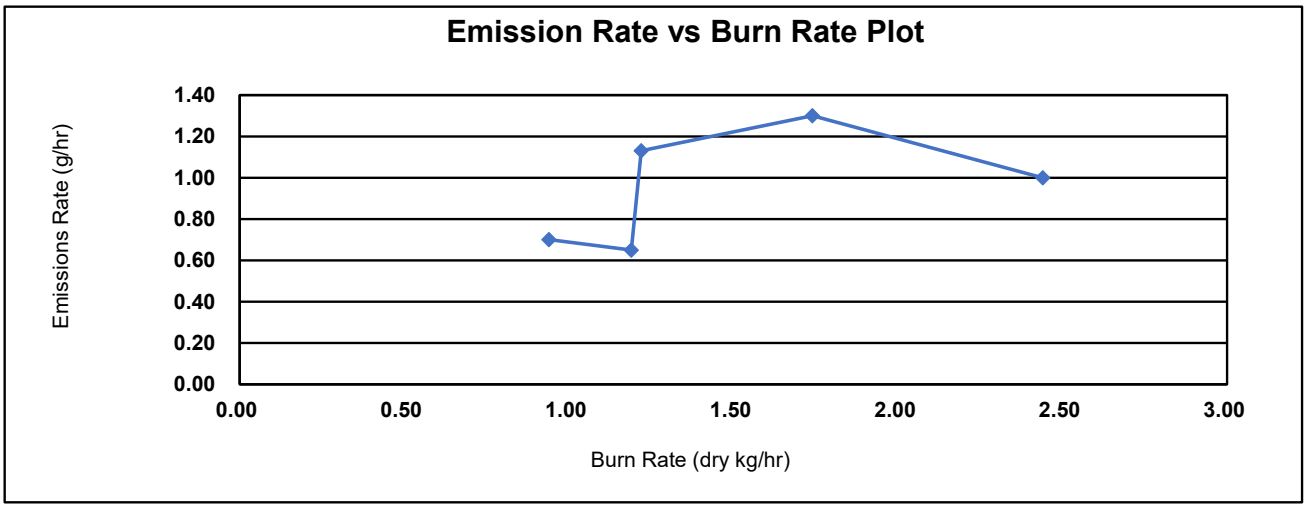

WOOD STOVE TEST DATA PACKET
ASTM E2780/E2515

Run 1 Data Summary

Client:	FPI
Model:	I3000
Job #:	23-229
Tracking #:	169
Test Date:	11/27/2023

Technician Signature

1/29/2024
Date

TEST RESULTS - ASTM E2780 / ASTM E2515

Client: FPI
Model: I3000
Run #: 1

Job #: 23-229
Tracking #: 169
Technician: AK
Date: 11/27/2023

Burn Rate (kg/hr):	0.99

	Ambient Sample	Sample Train A	Sample Train B	1st Hour Filter
Total Sample Volume (ft^3)	39.761	68.619	68.259	8.904
Average Gas Velocity in Dilution Tunnel (ft/sec)	7.5			
Average Gas Flow Rate in Dilution Tunnel (dscf/hr)	20262.0			
Average Gas Meter Temperature (°F)	66.6	93.8	92.5	77.0
Total Sample Volume (dscf)	39.606	65.528	65.337	8.788
Average Tunnel Temperature (°F)	78.7			
Total Time of Test (min)	401			
Total Particulate Catch (mg)	0.0	5.4	5.1	3.3
Particulate Concentration, dry-standard (g/dscf)	0.0000000	0.0000824	0.0000781	0.0003755
Total PM Emissions (g)	0.00	11.16	10.57	7.61
Particulate Emission Rate (g/hr)	0.00	1.67	1.58	7.61
Emissions Factor (g/kg)	-	1.68	1.59	-
Difference from Average Total Particulate Emissions (g)	-	0.29	0.29	-
Difference from Average Total Particulate Emissions (%)	-	2.7%	2.7%	
Difference from Average Emissions Factor (g/kg)	-	0.04	0.04	-

Final Average Results	
Total Particulate Emissions (g)	10.86
Particulate Emission Rate (g/hr)	1.63
Emissions Factor (g/kg)	1.64
HHV Efficiency (%)	80.5%
LHV Efficiency (%)	87.0%
CO Emissions (g/min)	0.50

Quality Checks	Requirement	Observed	Result
Dual Train Precision	Each train within 7.5% of average emissions (in grams), or emission factors within 0.5 g/kg	See Above	OK
Filter Temps	<90 °F	77.2	OK
Face Velocity	< 30 ft/min	9.5	OK
Leakage Rate	Less than 4% of average sample rate	0 cfm	OK
Ambient Temp	55-90 °F	Min:62.7/Max:69.5	OK
Negative Probe Weight Evaluation	<5% of Total Catch	Probe Catch Not Negative	OK
Pro-Rate Variation	90% of readings between 90-110%; none greater than 120% or less than 80%	See Data Tabs	OK
Stove Surface ΔT	<126°F	75.3	OK

B415.1 Efficiency Results

Manufacturer:	FPI
Model:	I3000
Date:	11/27/23
Run:	1
Control #:	23-229
Test Duration:	401
Output Category:	2

Test Results in Accordance with CSA B415.1-09

	HHV Basis	LHV Basis
Overall Efficiency	80.5%	87.0%
Combustion Efficiency	98.1%	98.1%
Heat Transfer Efficiency	82.0%	88.6%

Output Rate (kJ/h)	16,022	15,199	**(Btu/h)**
Burn Rate (kg/h)	1.01	2.22	**(lb/h)**
Input (kJ/h)	19,914	18,890	**(Btu/h)**

Test Load Weight (dry kg)	6.72	14.81	**dry lb**
MC wet (%)	17.69		
MC dry (%)	21.49		
Particulate (g)	10.86		
CO (g)	200		
Test Duration (h)	6.68		

Emissions	Particulate	CO
g/MJ Output	0.10	1.87
g/kg Dry Fuel	1.62	29.77
g/h	1.63	29.93
g/min	0.03	0.50
lb/MM Btu Output	0.24	4.34

Air/Fuel Ratio (A/F)	13.67

VERSION: **2.4** **4/15/2010**

WOODSTOVE FUEL DATA - ASTM E2780

Client: FPI
Model: I3000
Run #: 1

Job #: 23-229
Tracking #: 169
Technician: AK
Date: 11/27/2023

Preburn Fuel Information

Size	Length (in)	Moisture Content (% DB)	Size	Length (in)	Moisture Content (% DB)
2x4	17.00	19.3	2x4	20.00	22.2
2x4	17.00	19.7			
2x4	17.00	21.7			
2x4	17.00	21.7			
2x4	17.00	20.2			
2x4	17.00	20.0			
2x4	20.00	19.6			
2x4	20.00	19.2			

Total Fuel Weight (lbs): 17.61
Average Moisture (%DB): 20.4

Firebox Volume (ft^3): 2.75
Total 2x4 Crib Weight, with spacers (lbs): 9.02
Total 4x4 Crib Weight, with spacers (lbs): 8.74
Total Wet Fuel Weight, with spacers (lbs): 17.76

Coal Bed Range (20-25%):
Min (lbs): 3.55
Max (lbs): 4.44

Test Fuel Information

Size	Length (in)	Weight (lbs)	Moisture Content (%DB)			Dry Weight (lbs)
2x4	20.00	2.20	19.1	19.8	24.1	1.82
2x4	20.00	2.01	21.7	23.2	20.4	1.65
2x4	18.50	1.85	21.2	19.9	23.2	1.52
4x4	18.50	4.59	22.1	20.8	24.1	3.75
2x4	17.00	1.68	22.7	21.6	20.8	1.38
4x4	17.00	3.90	23.4	19.1	19.7	3.23
					Total Dry Weight, no spacers (lbs):	13.36
					Total Dry Weight, with spacers (lbs):	14.64

Spacer Moisture Readings (%DB)

17.6	22.0	17.7					
18.9	18.0	17.7					
18.6	19.4						
19.1	20.9						
20.8	20.4						
21.9	19.3						
20.1	18.2						
21.0	17.2						

Quality Checks	Requirement	Observed	Result
Fuel Density	25 - 36 (lbs/ft^3, DB)	27.8	OK
Loading Density	6.3 - 7.7 (lbs/ft^3, WB)	6.46	OK
2x4 Fuel Mix	35 - 65 % of total weight	51%	OK

DILUTION TUNNEL & MISC. DATA - ASTM E2780 / E2515

Client:	FPI	Job #:	23-229
Model:	I3000	Tracking #:	169
Run #:	1	Technician:	AK
Test Start Time:	14:18	Date:	11/27/2023

Total Sampling Time (min):	401	
Recording Interval (min):	1	
Meter Box γ Factor:	1.004	(A)
Meter Box γ Factor:	1.004	(B)
Meter Box γ Factor:	1.011	(C)
Meter Box γ Factor:	1.003	(Ambient)
Induced Draft Check (in. H_2O):	0	
Smoke Capture Check (%):	100%	
Date Flue Pipe Last Cleaned:	11/13/2023	
Test Fuel Scale Audit (lbs)	10.00	
Platform Scale Audit (lbs)	10.0	

	Pre-Test	Post Test	Avg.
Barometric Pressure (in. Hg)	29.67	29.62	29.65
Relative Humidity (%)	18.0	28.5	
Room Air Velocity (ft/min)	<50	<50	
Pitot Tube Leak Check	0	0	
Ambient Sample Volume:		39.761	ft^3

Sample Train Leak Checks

	Pre-test	Post-test			
(A)	0.000	0.000	cfm @	-6	in. Hg
(B)	0.000	0.000	cfm @	-5	in. Hg
(C)	0.000	0.000	cfm @	-6	in. Hg
(Ambient)	0.000	0.000	cfm @	-11	in. Hg

DILUTION TUNNEL FLOW

Traverse Data

Point	dP (in H_2O)	Temp (°F)
1	0.008	85
2	0.014	85
3	0.014	85
4	0.016	85
5	0.016	84
6	0.010	84
7	0.008	84
8	0.010	84
9	0.014	84
10	0.018	84
11	0.018	84
12	0.010	84
Center	0.017	84

Static Pressure: -0.110 in. H_2O

Dilution Tunnel H_2O:	2.00	percent
Tunnel Diameter:	12	inches
Pitot Tube Cp:	0.99	[unitless]
Dilution Tunnel MW(dry):	29.00	lb/lb-mole
Dilution Tunnel MW(wet):	28.78	lb/lb-mole
Tunnel Area:	0.7854	ft^2
V_{strav}:	7.63	ft/sec
V_{scent}:	8.81	ft/sec
F_p:	0.866	[ratio]
Initial Tunnel Flow:	338.8	scf/min

TEST FUEL PROPERTIES

Fuel Load Configuration

Firebox Front

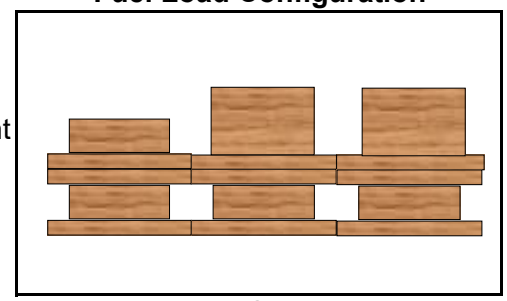

Firebox Back

Firebox Side View

Actual Fuel Used Properties

Fuel Type:	D. Fir
HHV (kJ/kg)	19,810
%C	48.73
%H	6.87
%O	43.9
%Ash	0.5
MC (%DB)	21.5

WOODSTOVE PREBURN DATA - ASTM E2780

Client: FPI
Model: I3000
Run #: 1

Job #: 23-229
Tracking #: 169
Technician: AK
Date: 11/27/2023

Recording Interval (min): 1
Run Time (min): 60

			Temperatures (°F)							
Elapsed Time (min)	Scale Reading (lbs)	Flue Draft (in H_2O)	FB Left	FB Right	FB Back	FB Top	FB Bottom	Stove Surface Average	Flue	Ambient
0	5.12	-0.060	442	466	274	628	469	455.7	396	70
1	5.10	-0.059	442	467	275	627	466	455.1	343	70
2	5.09	-0.056	442	467	274	620	459	452.1	320	70
3	5.08	-0.057	441	467	273	611	451	448.5	307	70
4	5.07	-0.056	441	468	275	603	442	445.4	298	70
5	5.05	-0.055	440	467	272	592	432	440.7	292	70
6	5.04	-0.054	439	467	270	583	423	436.7	289	70
7	5.02	-0.053	438	467	269	575	414	432.6	284	69
8	5.01	-0.052	438	466	266	566	406	428.3	281	69
9	4.99	-0.052	436	464	267	556	398	424.4	278	69
10	4.98	-0.051	435	463	263	549	391	420.1	274	70
11	4.96	-0.051	434	461	262	541	384	416.3	273	70
12	4.95	-0.049	432	459	260	533	377	412.1	271	69
13	4.93	-0.051	430	457	259	526	371	408.5	270	70
14	4.92	-0.050	427	454	258	520	365	404.9	266	70
15	4.91	-0.051	425	452	256	512	360	401.0	265	69
16	4.89	-0.048	423	449	254	506	355	397.4	263	69
17	4.88	-0.048	420	446	253	499	351	393.8	261	69
18	4.86	-0.047	418	443	253	492	346	390.2	259	69
19	4.85	-0.048	415	440	251	487	342	387.1	258	69
20	4.84	-0.047	413	437	251	481	338	384.1	255	69
21	4.82	-0.047	411	434	249	475	335	380.8	254	69
22	4.80	-0.045	409	432	247	470	332	377.8	251	69
23	4.79	-0.047	406	429	246	465	329	374.9	250	69
24	4.77	-0.045	404	426	246	460	326	372.2	248	69
25	4.76	-0.045	401	423	244	455	323	369.2	246	69
26	4.75	-0.044	399	421	243	450	321	366.5	243	69
27	4.74	-0.044	397	418	241	445	318	363.8	242	70
28	4.72	-0.044	394	415	240	441	316	361.3	241	69
29	4.71	-0.044	392	412	238	437	314	358.6	240	69
30	4.70	-0.044	390	410	237	433	312	356.2	238	69
31	4.69	-0.044	388	407	237	428	310	354.0	237	69
32	4.66	-0.044	385	404	236	424	308	351.4	235	69
33	4.66	-0.043	383	402	233	421	306	349.0	234	69
34	4.65	-0.042	381	400	234	417	304	347.3	233	69
35	4.64	-0.042	379	397	232	414	302	344.9	231	69
36	4.62	-0.041	377	395	231	410	301	342.7	228	69
37	4.61	-0.041	375	393	230	406	299	340.6	227	69
38	4.59	-0.040	372	390	229	403	298	338.4	226	69
39	4.58	-0.041	370	388	226	400	297	336.1	225	69
40	4.56	-0.040	368	385	227	398	295	334.6	224	69
41	4.55	-0.040	366	383	226	395	294	332.8	223	69
42	4.54	-0.040	364	381	224	392	293	330.8	222	69
43	4.53	-0.038	362	379	224	389	291	329.2	221	69
44	4.51	-0.040	360	377	223	386	290	327.2	221	69

WOODSTOVE PREBURN DATA - ASTM E2780

Client: FPI
Model: I3000
Run #: 1

Job #: 23-229
Tracking #: 169
Technician: AK
Date: 11/27/2023

Recording Interval (min): 1
Run Time (min): 60

			Temperatures (°F)							
Elapsed Time (min)	Scale Reading (lbs)	Flue Draft (in H_2O)	FB Left	FB Right	FB Back	FB Top	FB Bottom	Stove Surface Average	Flue	Ambient
45	4.50	-0.039	358	375	221	384	289	325.4	219	69
46	4.48	-0.040	357	373	221	381	288	323.9	218	69
47	4.48	-0.038	355	371	220	378	287	322.2	216	69
48	4.45	-0.038	353	369	219	376	286	320.5	215	69
49	4.45	-0.039	351	367	217	374	285	318.7	214	69
50	4.44	-0.038	349	366	217	372	284	317.4	214	69
51	4.42	-0.037	347	363	216	369	283	315.8	212	69
52	4.41	-0.038	346	362	216	367	282	314.5	211	69
53	4.40	-0.037	344	360	214	365	281	312.7	210	69
54	4.39	-0.036	342	358	214	363	280	311.4	209	69
55	4.37	-0.038	341	356	213	361	280	310.0	209	69
56	4.36	-0.037	339	355	213	359	279	308.7	208	69
57	4.35	-0.038	337	353	212	357	278	307.2	206	69
58	4.34	-0.038	336	351	211	355	277	306.0	206	69
59	4.33	-0.037	334	350	210	353	277	304.6	205	69
60	4.31	-0.036	332	348	209	351	276	303.2	205	69

BOX A TEST DATA - ASTM E2780 / ASTM E2515

Client: FPI
Model: I3000
Run #: 1

Job #: 23-229
Tracking #: 169
Technician: AK
Date: 11/27/2023

	Particulate Sampling Data							Fuel Weight (lb)		Temperature Data (°F)			
Elapsed Time (min)	Gas Meter (ft^3)	Sample Rate (cfm)	Dilution Tunnel dP (in H_2O)	Orifice dH (in H_2O)	Meter Temp (°F)	Meter Vacuum (in Hg)	Pro. Rate (%)	Scale Reading	Weight Change	Dilution Tunnel	Flue	Filter	Ambient
0	0.000		0.017	1.47	73	0.8		17.99		92	313	72	69
1	0.159	0.159	0.017	2.37	73	0.9	-	17.98	-0.01	96	322	74	69
2	0.307	0.148	0.017	2.42	73	0.9	-	17.88	-0.10	91	297	74	69
3	0.463	0.156	0.017	2.44	73	0.9	-	17.72	-0.16	91	306	74	69
4	0.614	0.151	0.017	2.45	73	0.9	-	17.52	-0.20	91	338	74	69
5	0.773	0.159	0.017	2.48	73	0.9	-	17.31	-0.21	93	370	75	69
6	0.926	0.153	0.017	2.51	73	0.9	-	17.22	-0.09	89	327	75	70
7	1.084	0.158	0.017	2.54	74	0.9	-	17.14	-0.08	88	303	75	69
8	1.239	0.155	0.017	2.54	74	0.9	-	17.07	-0.07	87	291	75	69
9	1.397	0.158	0.017	2.56	74	0.9	-	17.00	-0.07	86	283	75	69
10	1.557	0.160	0.017	2.58	74	0.9	94	16.93	-0.07	86	276	75	69
11	1.711	0.154	0.017	2.60	74	0.9	-	16.85	-0.08	86	273	75	69
12	1.874	0.163	0.017	2.61	74	0.9	-	16.77	-0.08	86	270	75	69
13	2.031	0.157	0.017	2.62	75	0.9	-	16.70	-0.07	86	259	75	69
14	2.190	0.159	0.017	2.63	75	0.9	-	16.61	-0.09	86	256	75	69
15	2.353	0.163	0.017	2.65	75	1.0	-	16.53	-0.08	86	255	75	69
16	2.510	0.157	0.017	2.65	75	1.0	-	16.45	-0.08	86	257	75	69
17	2.674	0.164	0.017	2.67	76	0.9	-	16.36	-0.09	86	257	75	69
18	2.832	0.158	0.017	2.67	76	0.9	-	16.27	-0.09	86	257	75	69
19	2.995	0.163	0.017	2.70	76	1.0	-	16.19	-0.08	86	260	75	69
20	3.158	0.163	0.017	2.71	76	1.0	97	16.09	-0.10	86	261	75	69
21	3.317	0.159	0.017	2.71	77	1.0	-	16.00	-0.09	86	260	75	69
22	3.482	0.165	0.017	2.73	77	0.9	-	15.92	-0.08	86	259	75	69
23	3.645	0.163	0.018	2.73	77	1.0	-	15.83	-0.09	86	261	75	69
24	3.806	0.161	0.017	2.73	78	0.9	-	15.75	-0.08	86	262	75	69
25	3.973	0.167	0.017	2.75	78	1.0	-	15.66	-0.09	86	264	75	69
26	4.133	0.160	0.017	2.75	78	1.0	-	15.56	-0.10	86	264	75	69
27	4.298	0.165	0.017	2.76	79	1.0	-	15.47	-0.09	86	265	75	69
28	4.463	0.165	0.018	2.75	79	1.0	-	15.36	-0.11	86	267	75	69
29	4.626	0.163	0.017	2.77	79	0.9	-	15.26	-0.10	86	270	75	69
30	4.791	0.165	0.017	2.77	79	0.9	98	15.15	-0.11	85	272	75	69
31	4.958	0.167	0.017	2.77	80	1.0	-	15.03	-0.12	85	276	75	69

BOX A TEST DATA - ASTM E2780 / ASTM E2515

Client: FPI
Model: I3000
Run #: 1

Job #: 23-229
Tracking #: 169
Technician: AK
Date: 11/27/2023

	Particulate Sampling Data							Fuel Weight (lb)		Temperature Data (°F)			
Elapsed Time (min)	Gas Meter (ft^3)	Sample Rate (cfm)	Dilution Tunnel dP (in H_2O)	Orifice dH (in H_2O)	Meter Temp (°F)	Meter Vacuum (in Hg)	Pro. Rate (%)	Scale Reading	Weight Change	Dilution Tunnel	Flue	Filter	Ambient
32	5.120	0.162	0.017	2.79	80	1.0	-	14.91	-0.12	85	279	75	69
33	5.286	0.166	0.017	2.79	80	0.9	-	14.78	-0.13	85	281	75	69
34	5.454	0.168	0.017	2.80	81	0.9	-	14.65	-0.13	85	285	75	69
35	5.616	0.162	0.017	2.80	81	1.0	-	14.52	-0.13	85	288	75	69
36	5.783	0.167	0.016	2.79	81	1.0	-	14.38	-0.14	85	292	75	69
37	5.951	0.168	0.017	2.80	82	1.0	-	14.25	-0.13	85	290	75	69
38	6.113	0.162	0.017	2.81	82	1.0	-	14.11	-0.14	86	292	75	69
39	6.282	0.169	0.017	2.81	82	1.0	-	13.97	-0.14	86	292	75	69
40	6.450	0.168	0.017	2.82	83	1.0	99	13.84	-0.13	86	293	75	69
41	6.613	0.163	0.017	2.82	83	1.0	-	13.71	-0.13	85	294	75	69
42	6.782	0.169	0.017	2.81	83	1.0	-	13.58	-0.13	85	292	75	69
43	6.951	0.169	0.017	2.83	84	1.0	-	13.45	-0.13	86	296	75	69
44	7.115	0.164	0.017	2.83	84	1.0	-	13.32	-0.13	86	297	75	69
45	7.284	0.169	0.017	2.84	84	1.0	-	13.18	-0.14	86	299	75	69
46	7.453	0.169	0.017	2.85	85	1.0	-	13.03	-0.15	86	302	75	69
47	7.617	0.164	0.017	2.85	85	1.0	-	12.89	-0.14	86	304	75	69
48	7.786	0.169	0.017	2.84	85	1.0	-	12.76	-0.13	86	303	75	69
49	7.955	0.169	0.016	2.85	85	1.0	-	12.63	-0.13	86	302	75	69
50	8.121	0.166	0.017	2.84	86	1.0	99	12.50	-0.13	86	303	75	69
51	8.290	0.169	0.017	2.84	86	1.0	-	12.37	-0.13	86	301	75	69
52	8.459	0.169	0.017	2.86	86	1.0	-	12.25	-0.12	86	301	75	69
53	8.626	0.167	0.016	2.87	86	1.0	-	12.14	-0.11	86	298	75	69
54	8.795	0.169	0.017	2.86	87	1.0	-	12.02	-0.12	86	298	75	69
55	8.964	0.169	0.017	2.86	87	1.0	-	11.90	-0.12	86	298	75	69
56	9.131	0.167	0.017	2.86	87	1.0	-	11.78	-0.12	86	298	75	69
57	9.300	0.169	0.017	2.87	88	1.0	-	11.67	-0.11	85	295	75	69
58	9.471	0.171	0.017	2.87	88	1.0	-	11.55	-0.12	86	295	75	69
59	9.638	0.167	0.017	2.87	88	1.0	-	11.44	-0.11	85	296	75	69
60	9.805	0.167	0.017	2.88	88	1.0	99	11.34	-0.10	85	294	75	69
61	9.977	0.172	0.017	2.89	89	1.0	-	11.24	-0.10	85	293	75	68
62	10.147	0.170	0.017	2.88	89	1.0	-	11.13	-0.11	85	292	75	69
63	10.314	0.167	0.017	2.88	89	1.0	-	11.04	-0.09	85	289	75	69

BOX A TEST DATA - ASTM E2780 / ASTM E2515

Client: FPI
Model: I3000
Run #: 1

Job #: 23-229
Tracking #: 169
Technician: AK
Date: 11/27/2023

	Particulate Sampling Data							Fuel Weight (lb)		Temperature Data (°F)			
Elapsed Time (min)	Gas Meter (ft^3)	Sample Rate (cfm)	Dilution Tunnel dP (in H_2O)	Orifice dH (in H_2O)	Meter Temp (°F)	Meter Vacuum (in Hg)	Pro. Rate (%)	Scale Reading	Weight Change	Dilution Tunnel	Flue	Filter	Ambient
64	10.484	0.170	0.017	2.89	89	1.0	-	10.96	-0.08	85	287	75	69
65	10.655	0.171	0.017	2.88	89	1.0	-	10.86	-0.10	85	286	75	69
66	10.823	0.168	0.017	2.90	90	1.0	-	10.78	-0.08	85	283	75	69
67	10.993	0.170	0.017	2.89	90	1.0	-	10.69	-0.09	85	286	75	69
68	11.165	0.172	0.017	2.89	90	1.0	-	10.59	-0.10	85	287	75	69
69	11.332	0.167	0.017	2.89	90	1.0	-	10.50	-0.09	85	287	75	69
70	11.501	0.169	0.017	2.90	90	1.0	100	10.41	-0.09	85	284	75	69
71	11.675	0.174	0.017	2.89	91	1.0	-	10.32	-0.09	85	283	75	69
72	11.844	0.169	0.017	2.90	91	1.0	-	10.25	-0.07	85	280	75	68
73	12.012	0.168	0.016	2.89	91	1.0	-	10.17	-0.08	85	277	75	69
74	12.183	0.171	0.016	2.90	91	1.0	-	10.08	-0.09	84	276	75	69
75	12.355	0.172	0.017	2.92	91	1.0	-	10.00	-0.08	84	273	75	69
76	12.523	0.168	0.017	2.91	91	1.0	-	9.92	-0.08	84	275	75	69
77	12.694	0.171	0.017	2.91	92	1.0	-	9.84	-0.08	84	272	75	69
78	12.867	0.173	0.017	2.91	92	1.0	-	9.76	-0.08	84	271	75	69
79	13.036	0.169	0.016	2.91	92	1.0	-	9.68	-0.08	84	272	75	69
80	13.204	0.168	0.016	2.90	92	1.0	101	9.61	-0.07	84	269	75	69
81	13.377	0.173	0.016	2.91	92	1.0	-	9.53	-0.08	84	268	75	69
82	13.549	0.172	0.017	2.92	92	1.0	-	9.45	-0.08	84	268	75	69
83	13.717	0.168	0.017	2.91	93	1.0	-	9.38	-0.07	84	267	75	69
84	13.889	0.172	0.017	2.91	93	1.0	-	9.31	-0.07	84	267	75	69
85	14.061	0.172	0.017	2.92	93	1.0	-	9.22	-0.09	84	268	75	69
86	14.230	0.169	0.017	2.91	93	1.0	-	9.15	-0.07	84	269	75	69
87	14.400	0.170	0.017	2.92	93	1.0	-	9.06	-0.09	84	271	75	69
88	14.574	0.174	0.017	2.92	93	1.0	-	8.98	-0.08	84	274	75	69
89	14.746	0.172	0.017	2.92	93	1.0	-	8.90	-0.08	84	274	75	69
90	14.915	0.169	0.016	2.92	93	1.0	103	8.80	-0.10	84	273	75	69
91	15.087	0.172	0.016	2.92	94	1.0	-	8.73	-0.07	84	274	75	68
92	15.259	0.172	0.017	2.92	94	1.0	-	8.64	-0.09	84	276	75	69
93	15.428	0.169	0.017	2.93	94	1.0	-	8.55	-0.09	84	278	75	69
94	15.599	0.171	0.016	2.93	94	1.0	-	8.47	-0.08	84	277	75	69
95	15.773	0.174	0.016	2.93	94	1.0	-	8.39	-0.08	84	276	75	69

BOX A TEST DATA - ASTM E2780 / ASTM E2515

Client: FPI
Model: I3000
Run #: 1

Job #: 23-229
Tracking #: 169
Technician: AK
Date: 11/27/2023

	Particulate Sampling Data							Fuel Weight (lb)		Temperature Data (°F)			
Elapsed Time (min)	Gas Meter (ft^3)	Sample Rate (cfm)	Dilution Tunnel dP (in H_2O)	Orifice dH (in H_2O)	Meter Temp (°F)	Meter Vacuum (in Hg)	Pro. Rate (%)	Scale Reading	Weight Change	Dilution Tunnel	Flue	Filter	Ambient
96	15.946	0.173	0.017	2.93	94	1.0	-	8.30	-0.09	84	276	75	69
97	16.115	0.169	0.017	2.92	94	1.0	-	8.22	-0.08	84	278	75	69
98	16.287	0.172	0.017	2.93	94	1.0	-	8.13	-0.09	84	280	75	69
99	16.460	0.173	0.017	2.93	94	1.0	-	8.04	-0.09	84	279	75	69
100	16.629	0.169	0.017	2.91	95	1.0	101	7.97	-0.07	84	279	75	69
101	16.800	0.171	0.016	2.93	95	1.0	-	7.89	-0.08	84	277	75	69
102	16.974	0.174	0.017	2.93	95	1.0	-	7.81	-0.08	84	276	75	69
103	17.147	0.173	0.016	2.93	95	1.0	-	7.72	-0.09	84	274	75	68
104	17.317	0.170	0.017	2.93	95	1.0	-	7.65	-0.07	84	273	75	68
105	17.489	0.172	0.016	2.92	95	1.0	-	7.57	-0.08	84	275	75	68
106	17.663	0.174	0.017	2.94	95	1.0	-	7.50	-0.07	84	274	75	68
107	17.833	0.170	0.017	2.93	95	1.0	-	7.42	-0.08	84	272	75	69
108	18.002	0.169	0.017	2.94	95	1.0	-	7.35	-0.07	84	273	75	68
109	18.177	0.175	0.016	2.93	95	1.0	-	7.27	-0.08	84	273	75	68
110	18.349	0.172	0.017	2.93	95	1.0	100	7.20	-0.07	84	275	75	68
111	18.519	0.170	0.016	2.94	95	1.0	-	7.12	-0.08	84	273	75	69
112	18.692	0.173	0.016	2.94	96	1.0	-	7.05	-0.07	84	272	75	68
113	18.866	0.174	0.017	2.93	96	1.0	-	6.97	-0.08	84	274	75	69
114	19.038	0.172	0.017	2.94	96	1.0	-	6.89	-0.08	84	274	75	68
115	19.207	0.169	0.017	2.93	96	1.0	-	6.81	-0.08	84	274	75	68
116	19.380	0.173	0.017	2.94	96	1.0	-	6.74	-0.07	84	274	75	68
117	19.554	0.174	0.017	2.93	96	1.0	-	6.66	-0.08	83	276	75	68
118	19.724	0.170	0.016	2.94	96	1.0	-	6.58	-0.08	84	274	75	68
119	19.895	0.171	0.016	2.93	96	1.0	-	6.51	-0.07	83	277	75	68
120	20.070	0.175	0.016	2.95	96	1.0	101	6.44	-0.07	83	276	75	68
121	20.244	0.174	0.016	2.94	96	1.0	-	6.36	-0.08	83	274	75	68
122	20.413	0.169	0.017	2.93	96	1.0	-	6.30	-0.06	83	273	75	68
123	20.586	0.173	0.017	2.95	96	1.0	-	6.23	-0.07	83	273	75	68
124	20.760	0.174	0.016	2.94	96	1.0	-	6.16	-0.07	83	274	75	68
125	20.930	0.170	0.016	2.93	96	1.0	-	6.09	-0.07	83	276	75	68
126	21.100	0.170	0.017	2.94	96	1.0	-	6.03	-0.06	83	274	75	68
127	21.275	0.175	0.017	2.95	97	1.0	-	5.96	-0.07	83	274	75	68

BOX A TEST DATA - ASTM E2780 / ASTM E2515

Client: FPI
Model: I3000
Run #: 1

Job #: 23-229
Tracking #: 169
Technician: AK
Date: 11/27/2023

	Particulate Sampling Data							Fuel Weight (lb)		Temperature Data (°F)			
Elapsed Time (min)	Gas Meter (ft^3)	Sample Rate (cfm)	Dilution Tunnel dP (in H_2O)	Orifice dH (in H_2O)	Meter Temp (°F)	Meter Vacuum (in Hg)	Pro. Rate (%)	Scale Reading	Weight Change	Dilution Tunnel	Flue	Filter	Ambient
128	21.449	0.174	0.017	2.95	97	1.0	-	5.89	-0.07	83	272	75	68
129	21.619	0.170	0.017	2.94	97	1.0	-	5.82	-0.07	83	272	75	68
130	21.792	0.173	0.017	2.95	97	1.0	101	5.76	-0.06	83	272	75	68
131	21.967	0.175	0.017	2.95	97	1.0	-	5.69	-0.07	83	270	75	68
132	22.139	0.172	0.017	2.94	97	1.0	-	5.62	-0.07	83	269	75	68
133	22.309	0.170	0.016	2.95	97	1.0	-	5.55	-0.07	83	268	75	68
134	22.482	0.173	0.017	2.94	97	1.0	-	5.48	-0.07	83	270	75	68
135	22.657	0.175	0.017	2.94	97	1.0	-	5.42	-0.06	83	268	75	68
136	22.826	0.169	0.018	2.93	97	1.0	-	5.36	-0.06	83	268	75	68
137	22.998	0.172	0.017	2.94	97	1.0	-	5.30	-0.06	83	270	75	68
138	23.173	0.175	0.016	2.94	97	1.0	-	5.23	-0.07	82	270	75	68
139	23.346	0.173	0.017	2.95	97	1.0	-	5.16	-0.07	82	267	74	68
140	23.516	0.170	0.017	2.94	97	1.0	100	5.09	-0.07	82	269	74	68
141	23.690	0.174	0.017	2.95	97	1.0	-	5.03	-0.06	82	268	74	68
142	23.864	0.174	0.017	2.95	97	1.0	-	4.97	-0.06	82	268	74	68
143	24.037	0.173	0.017	2.93	97	1.0	-	4.90	-0.07	82	266	74	68
144	24.207	0.170	0.017	2.96	97	1.0	-	4.85	-0.05	82	267	74	68
145	24.380	0.173	0.017	2.94	97	1.0	-	4.78	-0.07	82	265	74	68
146	24.554	0.174	0.017	2.95	97	1.0	-	4.73	-0.05	82	265	74	68
147	24.725	0.171	0.017	2.93	97	1.0	-	4.68	-0.05	82	264	74	68
148	24.896	0.171	0.017	2.94	97	1.0	-	4.63	-0.05	82	262	74	68
149	25.071	0.175	0.017	2.94	97	1.0	-	4.58	-0.05	82	261	74	68
150	25.244	0.173	0.017	2.94	97	1.0	100	4.53	-0.05	82	259	74	68
151	25.415	0.171	0.017	2.94	97	1.0	-	4.48	-0.05	82	258	74	68
152	25.588	0.173	0.017	2.95	97	1.0	-	4.43	-0.05	82	257	74	68
153	25.763	0.175	0.017	2.96	97	1.0	-	4.38	-0.05	82	254	74	68
154	25.935	0.172	0.017	2.94	97	1.0	-	4.34	-0.04	82	253	74	67
155	26.106	0.171	0.017	2.95	97	1.0	-	4.30	-0.04	81	253	74	67
156	26.279	0.173	0.017	2.94	97	1.0	-	4.25	-0.05	81	252	74	67
157	26.454	0.175	0.017	2.95	97	1.0	-	4.21	-0.04	81	250	74	67
158	26.624	0.170	0.017	2.95	97	1.0	-	4.17	-0.04	81	248	74	67
159	26.795	0.171	0.016	2.95	97	1.0	-	4.13	-0.04	81	248	74	68

BOX A TEST DATA - ASTM E2780 / ASTM E2515

Client: FPI
Model: I3000
Run #: 1

Job #: 23-229
Tracking #: 169
Technician: AK
Date: 11/27/2023

	Particulate Sampling Data							Fuel Weight (lb)		Temperature Data (°F)			
Elapsed Time (min)	Gas Meter (ft^3)	Sample Rate (cfm)	Dilution Tunnel dP (in H_2O)	Orifice dH (in H_2O)	Meter Temp (°F)	Meter Vacuum (in Hg)	Pro. Rate (%)	Scale Reading	Weight Change	Dilution Tunnel	Flue	Filter	Ambient
160	26.970	0.175	0.017	2.96	97	1.0	100	4.09	-0.04	81	246	74	67
161	27.144	0.174	0.017	2.96	97	1.0	-	4.04	-0.05	81	244	74	67
162	27.315	0.171	0.017	2.95	97	1.0	-	4.00	-0.04	81	243	74	67
163	27.488	0.173	0.017	2.96	98	1.0	-	3.97	-0.03	81	242	74	67
164	27.663	0.175	0.016	2.96	98	1.0	-	3.94	-0.03	81	242	74	67
165	27.836	0.173	0.017	2.95	98	1.0	-	3.91	-0.03	81	241	74	67
166	28.006	0.170	0.017	2.95	98	1.0	-	3.88	-0.03	81	240	74	67
167	28.180	0.174	0.017	2.96	98	1.0	-	3.84	-0.04	80	239	74	67
168	28.355	0.175	0.017	2.95	98	1.0	-	3.82	-0.02	80	236	74	67
169	28.526	0.171	0.017	2.95	98	1.0	-	3.80	-0.02	80	235	74	67
170	28.697	0.171	0.017	2.95	98	1.0	100	3.77	-0.03	80	234	73	67
171	28.871	0.174	0.017	2.95	98	1.0	-	3.74	-0.03	80	232	73	67
172	29.046	0.175	0.016	2.96	98	1.0	-	3.72	-0.02	80	231	73	67
173	29.217	0.171	0.017	2.95	98	1.0	-	3.69	-0.03	80	229	73	67
174	29.388	0.171	0.017	2.96	98	1.0	-	3.68	-0.01	80	228	73	67
175	29.564	0.176	0.017	2.96	98	1.0	-	3.65	-0.03	80	227	73	67
176	29.738	0.174	0.017	2.96	98	1.0	-	3.63	-0.02	80	226	73	67
177	29.909	0.171	0.017	2.95	98	1.0	-	3.61	-0.02	79	225	73	67
178	30.082	0.173	0.017	2.95	98	1.0	-	3.58	-0.03	79	223	73	67
179	30.256	0.174	0.017	2.95	98	1.0	-	3.56	-0.02	79	224	73	67
180	30.429	0.173	0.017	2.95	98	1.0	100	3.54	-0.02	79	222	73	67
181	30.599	0.170	0.017	2.95	98	1.0	-	3.51	-0.03	79	221	73	67
182	30.773	0.174	0.017	2.95	98	1.0	-	3.49	-0.02	79	220	73	67
183	30.947	0.174	0.017	2.95	98	1.0	-	3.46	-0.03	79	220	73	67
184	31.118	0.171	0.017	2.96	98	1.0	-	3.44	-0.02	79	218	73	67
185	31.290	0.172	0.017	2.96	98	1.0	-	3.42	-0.02	79	219	73	67
186	31.465	0.175	0.017	2.95	98	1.0	-	3.40	-0.02	79	217	73	67
187	31.639	0.174	0.017	2.95	98	1.0	-	3.38	-0.02	79	217	73	67
188	31.810	0.171	0.016	2.97	98	1.0	-	3.35	-0.03	79	215	73	67
189	31.983	0.173	0.017	2.96	98	1.0	-	3.34	-0.01	79	215	73	67
190	32.158	0.175	0.017	2.95	98	1.0	99	3.31	-0.03	79	214	73	67
191	32.331	0.173	0.018	2.96	98	1.0	-	3.29	-0.02	78	213	73	67

BOX A TEST DATA - ASTM E2780 / ASTM E2515

Client: FPI
Model: I3000
Run #: 1

Job #: 23-229
Tracking #: 169
Technician: AK
Date: 11/27/2023

	Particulate Sampling Data							Fuel Weight (lb)		Temperature Data (°F)			
Elapsed Time (min)	Gas Meter (ft^3)	Sample Rate (cfm)	Dilution Tunnel dP (in H_2O)	Orifice dH (in H_2O)	Meter Temp (°F)	Meter Vacuum (in Hg)	Pro. Rate (%)	Scale Reading	Weight Change	Dilution Tunnel	Flue	Filter	Ambient
192	32.501	0.170	0.017	2.96	98	1.0	-	3.27	-0.02	78	212	73	67
193	32.675	0.174	0.016	2.95	98	1.0	-	3.25	-0.02	78	212	73	67
194	32.850	0.175	0.016	2.95	98	1.0	-	3.24	-0.01	78	211	73	67
195	33.020	0.170	0.017	2.96	98	1.0	-	3.21	-0.03	78	210	73	67
196	33.191	0.171	0.017	2.95	98	1.0	-	3.19	-0.02	78	209	73	67
197	33.366	0.175	0.017	2.96	98	1.0	-	3.18	-0.01	78	208	73	67
198	33.541	0.175	0.017	2.96	98	1.0	-	3.16	-0.02	78	209	72	67
199	33.711	0.170	0.017	2.95	98	1.0	-	3.14	-0.02	78	209	72	67
200	33.884	0.173	0.017	2.96	98	1.0	99	3.12	-0.02	78	208	72	67
201	34.060	0.176	0.017	2.96	98	1.0	-	3.10	-0.02	78	207	72	67
202	34.233	0.173	0.018	2.95	98	1.0	-	3.08	-0.02	78	206	72	67
203	34.403	0.170	0.017	2.95	98	1.0	-	3.06	-0.02	78	206	72	67
204	34.577	0.174	0.017	2.95	98	1.0	-	3.04	-0.02	78	206	72	67
205	34.752	0.175	0.016	2.96	98	1.0	-	3.03	-0.01	78	205	72	67
206	34.924	0.172	0.017	2.94	98	1.0	-	3.00	-0.03	77	205	72	67
207	35.094	0.170	0.017	2.96	98	1.0	-	2.99	-0.01	77	204	72	67
208	35.268	0.174	0.016	2.95	98	1.0	-	2.97	-0.02	77	204	72	67
209	35.443	0.175	0.017	2.95	98	1.0	-	2.95	-0.02	77	204	72	67
210	35.614	0.171	0.017	2.94	98	1.0	99	2.93	-0.02	77	204	72	67
211	35.786	0.172	0.017	2.96	98	1.0	-	2.91	-0.02	77	203	72	67
212	35.961	0.175	0.017	2.96	98	1.0	-	2.89	-0.02	77	205	72	67
213	36.135	0.174	0.016	2.96	98	1.0	-	2.87	-0.02	77	202	72	67
214	36.306	0.171	0.017	2.96	98	1.0	-	2.86	-0.01	77	203	72	67
215	36.479	0.173	0.017	2.96	98	1.0	-	2.84	-0.02	77	202	72	66
216	36.654	0.175	0.017	2.95	98	1.0	-	2.82	-0.02	77	202	72	67
217	36.827	0.173	0.017	2.95	98	1.0	-	2.80	-0.02	77	201	72	67
218	36.997	0.170	0.017	2.95	98	1.0	-	2.78	-0.02	77	200	72	66
219	37.171	0.174	0.017	2.95	98	1.0	-	2.77	-0.01	77	200	72	66
220	37.346	0.175	0.016	2.96	98	1.0	101	2.74	-0.03	77	200	72	66
221	37.516	0.170	0.016	2.95	98	1.0	-	2.73	-0.01	77	201	72	66
222	37.688	0.172	0.016	2.96	98	1.0	-	2.71	-0.02	77	200	72	67
223	37.863	0.175	0.017	2.96	98	1.0	-	2.69	-0.02	77	199	72	66

BOX A TEST DATA - ASTM E2780 / ASTM E2515

Client: FPI
Model: I3000
Run #: 1

Job #: 23-229
Tracking #: 169
Technician: AK
Date: 11/27/2023

	Particulate Sampling Data							Fuel Weight (lb)		Temperature Data (°F)			
Elapsed Time (min)	Gas Meter (ft^3)	Sample Rate (cfm)	Dilution Tunnel dP (in H_2O)	Orifice dH (in H_2O)	Meter Temp (°F)	Meter Vacuum (in Hg)	Pro. Rate (%)	Scale Reading	Weight Change	Dilution Tunnel	Flue	Filter	Ambient
224	38.037	0.174	0.017	2.96	98	1.0	-	2.68	-0.01	77	199	72	66
225	38.207	0.170	0.017	2.96	98	1.0	-	2.66	-0.02	77	198	72	66
226	38.380	0.173	0.016	2.96	98	1.0	-	2.63	-0.03	77	197	72	66
227	38.556	0.176	0.017	2.96	98	1.0	-	2.62	-0.01	77	197	72	66
228	38.729	0.173	0.017	2.94	98	1.0	-	2.59	-0.03	77	197	72	66
229	38.899	0.170	0.017	2.95	98	1.0	-	2.58	-0.01	77	196	72	66
230	39.073	0.174	0.017	2.95	98	1.0	101	2.56	-0.02	77	195	72	66
231	39.247	0.174	0.017	2.95	98	1.0	-	2.55	-0.01	77	196	72	66
232	39.419	0.172	0.017	2.96	98	1.0	-	2.52	-0.03	77	196	71	66
233	39.589	0.170	0.017	2.95	98	1.0	-	2.51	-0.01	77	196	72	66
234	39.764	0.175	0.017	2.96	98	1.0	-	2.50	-0.01	76	195	72	66
235	39.938	0.174	0.017	2.96	98	1.0	-	2.47	-0.03	76	195	71	66
236	40.109	0.171	0.016	2.95	98	1.0	-	2.46	-0.01	76	194	71	66
237	40.281	0.172	0.017	2.96	98	1.0	-	2.44	-0.02	76	193	71	66
238	40.457	0.176	0.016	2.96	98	1.0	-	2.43	-0.01	76	194	71	66
239	40.631	0.174	0.017	2.96	98	1.0	-	2.41	-0.02	76	193	71	66
240	40.801	0.170	0.017	2.95	98	1.0	99	2.39	-0.02	76	193	71	66
241	40.974	0.173	0.017	2.95	98	1.0	-	2.38	-0.01	76	192	71	66
242	41.149	0.175	0.017	2.94	98	1.0	-	2.36	-0.02	76	192	71	66
243	41.322	0.173	0.017	2.94	98	1.0	-	2.34	-0.02	76	191	71	66
244	41.492	0.170	0.017	2.96	98	1.0	-	2.33	-0.01	76	191	71	66
245	41.665	0.173	0.016	2.94	98	1.0	-	2.31	-0.02	76	191	71	66
246	41.840	0.175	0.017	2.95	98	1.0	-	2.30	-0.01	76	190	71	66
247	42.011	0.171	0.017	2.95	98	1.0	-	2.28	-0.02	76	190	71	66
248	42.183	0.172	0.017	2.96	98	1.0	-	2.27	-0.01	76	190	71	66
249	42.358	0.175	0.017	2.95	98	1.0	-	2.25	-0.02	76	189	71	66
250	42.532	0.174	0.017	2.95	98	1.0	99	2.24	-0.01	76	190	71	66
251	42.702	0.170	0.017	2.95	98	1.0	-	2.22	-0.02	76	189	71	66
252	42.876	0.174	0.016	2.95	97	1.0	-	2.21	-0.01	76	189	71	66
253	43.050	0.174	0.017	2.95	98	1.0	-	2.19	-0.02	76	187	71	66
254	43.223	0.173	0.016	2.94	98	1.0	-	2.17	-0.02	76	188	71	66
255	43.393	0.170	0.017	2.95	98	1.0	-	2.16	-0.01	76	188	71	66

BOX A TEST DATA - ASTM E2780 / ASTM E2515

Client: FPI
Model: I3000
Run #: 1

Job #: 23-229
Tracking #: 169
Technician: AK
Date: 11/27/2023

	Particulate Sampling Data							Fuel Weight (lb)		Temperature Data (°F)			
Elapsed Time (min)	Gas Meter (ft^3)	Sample Rate (cfm)	Dilution Tunnel dP (in H_2O)	Orifice dH (in H_2O)	Meter Temp (°F)	Meter Vacuum (in Hg)	Pro. Rate (%)	Scale Reading	Weight Change	Dilution Tunnel	Flue	Filter	Ambient
256	43.566	0.173	0.017	2.95	97	1.0	-	2.14	-0.02	76	188	71	66
257	43.740	0.174	0.016	2.94	97	1.0	-	2.13	-0.01	76	189	71	66
258	43.911	0.171	0.017	2.95	97	1.0	-	2.11	-0.02	76	188	71	66
259	44.083	0.172	0.017	2.95	97	1.0	-	2.10	-0.01	76	189	71	66
260	44.258	0.175	0.017	2.95	97	1.0	99	2.08	-0.02	75	188	71	66
261	44.431	0.173	0.017	2.95	97	1.0	-	2.06	-0.02	76	188	71	66
262	44.602	0.171	0.017	2.94	97	1.0	-	2.05	-0.01	75	188	71	66
263	44.775	0.173	0.017	2.97	97	1.0	-	2.04	-0.01	75	187	71	66
264	44.951	0.176	0.016	2.96	97	1.0	-	2.02	-0.02	76	189	71	66
265	45.124	0.173	0.016	2.95	97	1.0	-	2.00	-0.02	75	188	71	66
266	45.291	0.167	0.017	2.95	97	1.0	-	1.99	-0.01	75	188	71	66
267	45.468	0.177	0.017	2.95	97	1.0	-	1.98	-0.01	75	186	71	66
268	45.642	0.174	0.017	2.95	97	1.0	-	1.96	-0.02	75	186	71	66
269	45.814	0.172	0.017	2.94	97	1.0	-	1.94	-0.02	75	186	71	66
270	45.984	0.170	0.017	2.94	97	1.0	99	1.93	-0.01	75	186	71	66
271	46.159	0.175	0.017	2.95	97	1.0	-	1.91	-0.02	75	186	71	66
272	46.333	0.174	0.017	2.95	97	1.0	-	1.90	-0.01	75	186	71	66
273	46.504	0.171	0.017	2.97	97	1.0	-	1.89	-0.01	75	185	71	66
274	46.676	0.172	0.017	2.96	97	1.0	-	1.87	-0.02	75	184	71	66
275	46.852	0.176	0.017	2.97	97	1.0	-	1.85	-0.02	75	184	71	66
276	47.025	0.173	0.017	2.95	97	1.0	-	1.83	-0.02	75	184	71	66
277	47.195	0.170	0.017	2.95	97	1.0	-	1.82	-0.01	75	185	71	66
278	47.369	0.174	0.016	2.94	97	1.0	-	1.80	-0.02	75	184	71	66
279	47.544	0.175	0.016	2.95	97	1.0	-	1.79	-0.01	75	184	71	66
280	47.715	0.171	0.016	2.95	97	1.0	101	1.77	-0.02	75	184	71	66
281	47.886	0.171	0.017	2.95	97	1.0	-	1.76	-0.01	75	184	71	66
282	48.060	0.174	0.017	2.96	97	1.0	-	1.74	-0.02	75	184	71	66
283	48.234	0.174	0.016	2.96	97	1.0	-	1.72	-0.02	75	184	71	66
284	48.405	0.171	0.017	2.96	97	1.0	-	1.71	-0.01	75	183	71	66
285	48.578	0.173	0.017	2.96	97	1.0	-	1.70	-0.01	75	182	71	66
286	48.752	0.174	0.016	2.96	97	1.0	-	1.68	-0.02	75	182	71	66
287	48.927	0.175	0.017	2.96	97	1.0	-	1.66	-0.02	75	182	71	66

BOX A TEST DATA - ASTM E2780 / ASTM E2515

Client: FPI
Model: I3000
Run #: 1

Job #: 23-229
Tracking #: 169
Technician: AK
Date: 11/27/2023

	Particulate Sampling Data							Fuel Weight (lb)		Temperature Data (°F)			
Elapsed Time (min)	Gas Meter (ft^3)	Sample Rate (cfm)	Dilution Tunnel dP (in H_2O)	Orifice dH (in H_2O)	Meter Temp (°F)	Meter Vacuum (in Hg)	Pro. Rate (%)	Scale Reading	Weight Change	Dilution Tunnel	Flue	Filter	Ambient
288	49.097	0.170	0.016	2.97	97	1.0	-	1.65	-0.01	75	182	71	66
289	49.271	0.174	0.016	2.96	97	1.0	-	1.64	-0.01	75	181	71	66
290	49.446	0.175	0.016	2.95	97	1.0	102	1.62	-0.02	75	182	71	65
291	49.619	0.173	0.016	2.96	97	1.0	-	1.61	-0.01	75	181	70	65
292	49.789	0.170	0.017	2.96	97	1.0	-	1.59	-0.02	74	181	70	65
293	49.963	0.174	0.017	2.94	97	1.0	-	1.58	-0.01	74	181	70	65
294	50.138	0.175	0.017	2.95	97	1.0	-	1.56	-0.02	74	180	70	65
295	50.308	0.170	0.017	2.95	97	1.0	-	1.54	-0.02	74	180	70	65
296	50.480	0.172	0.017	2.95	97	1.0	-	1.53	-0.01	74	179	70	65
297	50.655	0.175	0.017	2.97	97	1.0	-	1.52	-0.01	74	178	70	65
298	50.829	0.174	0.017	2.96	97	1.0	-	1.50	-0.02	74	178	70	65
299	50.999	0.170	0.017	2.95	97	1.0	-	1.48	-0.02	74	179	70	65
300	51.172	0.173	0.017	2.95	97	1.0	100	1.47	-0.01	74	179	70	65
301	51.348	0.176	0.016	2.96	97	1.0	-	1.46	-0.01	74	179	70	65
302	51.522	0.174	0.017	2.96	97	1.0	-	1.44	-0.02	74	179	70	65
303	51.692	0.170	0.017	2.95	97	1.0	-	1.43	-0.01	74	179	70	65
304	51.865	0.173	0.017	2.96	97	1.0	-	1.41	-0.02	74	178	70	65
305	52.040	0.175	0.017	2.96	97	1.0	-	1.40	-0.01	74	179	70	65
306	52.212	0.172	0.016	2.96	97	1.0	-	1.38	-0.02	74	179	70	65
307	52.383	0.171	0.016	2.95	97	1.0	-	1.37	-0.01	74	180	70	65
308	52.557	0.174	0.016	2.95	97	1.0	-	1.35	-0.02	74	178	70	65
309	52.731	0.174	0.017	2.96	97	1.0	-	1.34	-0.01	73	178	70	65
310	52.902	0.171	0.016	2.96	97	1.0	101	1.32	-0.02	73	178	70	65
311	53.074	0.172	0.017	2.96	97	1.0	-	1.31	-0.01	73	178	70	65
312	53.249	0.175	0.017	2.96	97	1.0	-	1.30	-0.01	73	178	70	65
313	53.423	0.174	0.017	2.96	97	1.0	-	1.28	-0.02	73	178	70	65
314	53.594	0.171	0.017	2.96	97	1.0	-	1.27	-0.01	73	177	70	65
315	53.767	0.173	0.017	2.96	97	1.0	-	1.25	-0.02	73	178	70	65
316	53.942	0.175	0.016	2.95	97	1.0	-	1.24	-0.01	73	177	70	65
317	54.115	0.173	0.016	2.96	97	1.0	-	1.22	-0.02	73	177	70	65
318	54.285	0.170	0.017	2.96	97	1.0	-	1.21	-0.01	73	179	70	65
319	54.459	0.174	0.016	2.95	97	1.0	-	1.19	-0.02	73	177	70	65

BOX A TEST DATA - ASTM E2780 / ASTM E2515

Client: FPI
Model: I3000
Run #: 1

Job #: 23-229
Tracking #: 169
Technician: AK
Date: 11/27/2023

	Particulate Sampling Data							Fuel Weight (lb)		Temperature Data (°F)			
Elapsed Time (min)	Gas Meter (ft^3)	Sample Rate (cfm)	Dilution Tunnel dP (in H_2O)	Orifice dH (in H_2O)	Meter Temp (°F)	Meter Vacuum (in Hg)	Pro. Rate (%)	Scale Reading	Weight Change	Dilution Tunnel	Flue	Filter	Ambient
320	54.633	0.174	0.016	2.95	97	1.0	102	1.18	-0.01	73	176	70	65
321	54.804	0.171	0.016	2.94	97	1.0	-	1.16	-0.02	73	177	70	65
322	54.975	0.171	0.017	2.95	97	1.0	-	1.15	-0.01	73	177	70	65
323	55.151	0.176	0.016	2.96	97	1.0	-	1.13	-0.02	73	178	69	65
324	55.325	0.174	0.017	2.96	97	1.0	-	1.11	-0.02	73	178	69	65
325	55.495	0.170	0.016	2.95	97	1.0	-	1.10	-0.01	73	178	69	64
326	55.668	0.173	0.016	2.97	97	1.0	-	1.08	-0.02	73	178	69	64
327	55.844	0.176	0.017	2.96	97	1.0	-	1.07	-0.01	73	178	69	64
328	56.017	0.173	0.017	2.95	97	1.0	-	1.06	-0.01	73	177	69	64
329	56.187	0.170	0.017	2.95	97	1.0	-	1.04	-0.02	73	176	69	64
330	56.361	0.174	0.016	2.96	97	1.0	102	1.03	-0.01	73	176	69	64
331	56.535	0.174	0.016	2.95	97	1.0	-	1.02	-0.01	73	176	69	64
332	56.707	0.172	0.016	2.96	97	1.0	-	1.00	-0.02	72	175	69	64
333	56.877	0.170	0.017	2.95	97	1.0	-	0.97	-0.03	73	175	69	64
334	57.051	0.174	0.017	2.95	97	1.0	-	0.96	-0.01	72	175	69	64
335	57.226	0.175	0.016	2.96	97	1.0	-	0.95	-0.01	73	174	69	64
336	57.397	0.171	0.016	2.96	97	1.0	-	0.93	-0.02	73	175	69	64
337	57.569	0.172	0.016	2.95	97	1.0	-	0.92	-0.01	72	175	69	64
338	57.744	0.175	0.017	2.96	97	1.0	-	0.90	-0.02	73	175	69	64
339	57.918	0.174	0.017	2.96	97	1.0	-	0.88	-0.02	73	175	69	64
340	58.088	0.170	0.017	2.96	96	1.0	100	0.87	-0.01	72	174	69	64
341	58.261	0.173	0.016	2.95	96	1.0	-	0.85	-0.02	72	174	69	64
342	58.436	0.175	0.016	2.96	96	1.0	-	0.84	-0.01	72	175	69	64
343	58.608	0.172	0.017	2.96	96	0.9	-	0.83	-0.01	72	174	69	64
344	58.778	0.170	0.016	2.95	96	1.0	-	0.81	-0.02	72	174	69	64
345	58.952	0.174	0.017	2.96	96	1.0	-	0.80	-0.01	72	175	69	64
346	59.126	0.174	0.016	2.95	96	1.0	-	0.79	-0.01	72	175	69	64
347	59.297	0.171	0.017	2.95	96	1.0	-	0.77	-0.02	72	174	69	64
348	59.469	0.172	0.016	2.97	96	1.0	-	0.76	-0.01	72	174	69	64
349	59.644	0.175	0.016	2.95	96	1.0	-	0.74	-0.02	72	174	69	64
350	59.818	0.174	0.017	2.96	96	1.0	99	0.73	-0.01	72	175	69	64
351	59.989	0.171	0.016	2.96	96	1.0	-	0.71	-0.02	72	174	69	64

BOX A TEST DATA - ASTM E2780 / ASTM E2515

Client: FPI
Model: I3000
Run #: 1

Job #: 23-229
Tracking #: 169
Technician: AK
Date: 11/27/2023

	Particulate Sampling Data							Fuel Weight (lb)		Temperature Data (°F)			
Elapsed Time (min)	Gas Meter (ft^3)	Sample Rate (cfm)	Dilution Tunnel dP (in H_2O)	Orifice dH (in H_2O)	Meter Temp (°F)	Meter Vacuum (in Hg)	Pro. Rate (%)	Scale Reading	Weight Change	Dilution Tunnel	Flue	Filter	Ambient
352	60.161	0.172	0.016	2.93	96	0.9	-	0.70	-0.01	72	174	69	64
353	60.336	0.175	0.016	2.96	96	1.0	-	0.68	-0.02	72	173	69	64
354	60.508	0.172	0.016	2.95	96	1.0	-	0.68	0.00	72	173	69	64
355	60.678	0.170	0.016	2.95	96	1.0	-	0.66	-0.02	72	173	69	64
356	60.852	0.174	0.017	2.96	96	1.0	-	0.64	-0.02	72	174	69	64
357	61.026	0.174	0.016	2.95	96	1.0	-	0.63	-0.01	72	173	68	64
358	61.197	0.171	0.016	2.95	96	1.0	-	0.61	-0.02	72	172	68	64
359	61.369	0.172	0.016	2.96	96	1.0	-	0.60	-0.01	72	172	68	64
360	61.543	0.174	0.016	2.95	96	1.0	100	0.59	-0.01	72	173	68	64
361	61.717	0.174	0.016	2.96	96	1.0	-	0.57	-0.02	72	173	68	64
362	61.888	0.171	0.017	2.96	96	1.0	-	0.56	-0.01	72	172	68	64
363	62.061	0.173	0.016	2.95	96	1.0	-	0.54	-0.02	72	171	68	64
364	62.235	0.174	0.016	2.94	96	1.0	-	0.53	-0.01	72	172	68	64
365	62.407	0.172	0.016	2.96	96	1.0	-	0.52	-0.01	72	172	68	63
366	62.577	0.170	0.017	2.95	96	1.0	-	0.50	-0.02	71	173	68	63
367	62.751	0.174	0.016	2.95	96	1.0	-	0.49	-0.01	71	172	68	64
368	62.925	0.174	0.017	2.96	96	1.0	-	0.48	-0.01	71	172	68	63
369	63.096	0.171	0.017	2.95	96	1.0	-	0.46	-0.02	71	172	68	63
370	63.268	0.172	0.016	2.96	96	1.0	102	0.44	-0.02	71	173	68	63
371	63.442	0.174	0.016	2.95	96	0.9	-	0.43	-0.01	72	172	68	63
372	63.616	0.174	0.017	2.96	96	1.0	-	0.42	-0.01	72	173	68	64
373	63.787	0.171	0.016	2.96	96	1.0	-	0.41	-0.01	71	173	68	63
374	63.960	0.173	0.016	2.94	96	1.0	-	0.39	-0.02	71	173	68	63
375	64.134	0.174	0.016	2.95	96	1.0	-	0.38	-0.01	71	173	68	64
376	64.306	0.172	0.017	2.95	96	0.9	-	0.36	-0.02	71	173	68	63
377	64.476	0.170	0.017	2.95	96	1.0	-	0.35	-0.01	71	172	68	63
378	64.650	0.174	0.016	2.94	96	1.0	-	0.34	-0.01	71	172	68	63
379	64.824	0.174	0.016	2.95	96	1.0	-	0.32	-0.02	71	172	68	63
380	64.994	0.170	0.016	2.95	96	1.0	102	0.31	-0.01	71	171	68	63
381	65.166	0.172	0.016	2.95	96	1.0	-	0.29	-0.02	71	171	68	63
382	65.341	0.175	0.016	2.95	96	1.0	-	0.28	-0.01	71	170	68	63
383	65.515	0.174	0.017	2.96	96	1.0	-	0.27	-0.01	71	172	68	63

BOX A TEST DATA - ASTM E2780 / ASTM E2515

Client: FPI
Model: I3000
Run #: 1

Job #: 23-229
Tracking #: 169
Technician: AK
Date: 11/27/2023

	Particulate Sampling Data							Fuel Weight (lb)		Temperature Data (°F)			
Elapsed Time (min)	Gas Meter (ft^3)	Sample Rate (cfm)	Dilution Tunnel dP (in H_2O)	Orifice dH (in H_2O)	Meter Temp (°F)	Meter Vacuum (in Hg)	Pro. Rate (%)	Scale Reading	Weight Change	Dilution Tunnel	Flue	Filter	Ambient
384	65.685	0.170	0.016	2.96	96	1.0	-	0.25	-0.02	71	172	68	63
385	65.858	0.173	0.016	2.94	96	1.0	-	0.24	-0.01	71	172	68	63
386	66.032	0.174	0.016	2.96	96	1.0	-	0.22	-0.02	71	171	68	63
387	66.205	0.173	0.016	2.96	96	1.0	-	0.21	-0.01	71	172	68	63
388	66.374	0.169	0.016	2.94	96	0.9	-	0.20	-0.01	71	172	68	63
389	66.548	0.174	0.017	2.94	96	1.0	-	0.19	-0.01	71	172	68	63
390	66.722	0.174	0.016	2.94	96	1.0	102	0.17	-0.02	71	171	68	63
391	66.892	0.170	0.016	2.95	96	1.0	-	0.16	-0.01	71	172	68	63
392	67.064	0.172	0.016	2.96	96	1.0	-	0.14	-0.02	71	172	68	63
393	67.239	0.175	0.016	2.97	96	1.0	-	0.12	-0.02	71	173	68	63
394	67.413	0.174	0.016	2.96	96	1.0	-	0.11	-0.01	71	172	68	63
395	67.583	0.170	0.016	2.95	96	1.0	-	0.10	-0.01	71	172	68	63
396	67.756	0.173	0.016	2.93	96	1.0	-	0.08	-0.02	71	172	68	63
397	67.930	0.174	0.016	2.95	96	1.0	-	0.07	-0.01	71	173	68	63
398	68.102	0.172	0.016	2.94	95	1.0	-	0.05	-0.02	71	172	68	63
399	68.272	0.170	0.016	2.94	95	1.0	-	0.04	-0.01	71	171	68	63
400	68.445	0.173	0.016	2.95	95	1.0	102	0.03	-0.01	71	170	68	63
401	68.619	0.174	0.016	2.95	95	1.0	102	0.00	-0.03	71	171	68	63
Avg/Tot	68.619	0.171	0.017	2.91	93.8	1.0	100			78.7	224.7	72.2	66.6

BOX B TEST DATA - ASTM E2780 / ASTM E2515

Client: FPI
Model: I3000
Run #: 1

Job #: 23-229
Tracking #: 169
Technician: AK
Date: 11/27/2023

	Particulate Sampling Data							Flue Gas Data		
Elapsed Time (min)	Gas Meter (ft^3)	Sample Rate (cfm)	Orifice dH (in H_2O)	Meter Temp (°F)	Meter Vacuum (in Hg)	Pro. Rate (%)	Filter (°F)	Flue Draft (in H_2O)	CO_2 (%)	CO (%)
0	0.000		1.90	74	2.0		75	-0.049	2.23	0.017
1	0.135	0.135	2.83	74	1.9	-	76	-0.053	2.20	0.037
2	0.296	0.161	2.83	74	1.6	-	76	-0.055	4.15	0.324
3	0.461	0.165	2.83	74	2.1	-	76	-0.059	10.24	0.758
4	0.626	0.165	2.82	74	1.7	-	77	-0.066	12.03	0.451
5	0.788	0.162	2.83	74	2.1	-	77	-0.071	13.11	0.417
6	0.953	0.165	2.83	74	2.0	-	77	-0.060	11.09	0.258
7	1.118	0.165	2.84	74	1.8	-	77	-0.056	7.30	0.074
8	1.281	0.163	2.85	74	1.6	-	77	-0.056	7.04	0.084
9	1.446	0.165	2.85	74	1.8	-	77	-0.055	7.29	0.098
10	1.611	0.165	2.84	74	1.6	98	77	-0.053	7.57	0.090
11	1.774	0.163	2.84	75	1.8	-	77	-0.054	7.65	0.116
12	1.939	0.165	2.84	75	2.0	-	77	-0.054	7.56	0.116
13	2.105	0.166	2.85	75	1.6	-	77	-0.054	7.63	0.119
14	2.268	0.163	2.85	75	1.7	-	77	-0.053	7.72	0.127
15	2.434	0.166	2.84	76	2.0	-	77	-0.055	7.78	0.131
16	2.600	0.166	2.86	76	1.9	-	77	-0.055	8.02	0.139
17	2.764	0.164	2.86	76	1.8	-	77	-0.054	8.24	0.143
18	2.929	0.165	2.85	76	1.6	-	77	-0.055	8.28	0.137
19	3.096	0.167	2.86	77	1.5	-	77	-0.055	8.48	0.135
20	3.259	0.163	2.86	77	1.6	100	77	-0.054	8.44	0.150
21	3.425	0.166	2.86	77	1.6	-	77	-0.056	8.42	0.154
22	3.592	0.167	2.86	78	1.8	-	77	-0.055	8.26	0.138
23	3.756	0.164	2.86	78	1.6	-	77	-0.056	8.37	0.146
24	3.922	0.166	2.86	78	1.7	-	77	-0.056	8.54	0.141
25	4.089	0.167	2.87	79	2.1	-	77	-0.056	8.60	0.141
26	4.254	0.165	2.87	79	1.5	-	77	-0.054	8.75	0.232
27	4.421	0.167	2.88	79	2.0	-	77	-0.056	8.89	0.253
28	4.588	0.167	2.87	80	2.1	-	77	-0.056	9.18	0.267
29	4.753	0.165	2.88	80	1.6	-	77	-0.056	9.76	0.274
30	4.920	0.167	2.88	80	1.7	100	77	-0.057	10.69	0.364
31	5.087	0.167	2.87	81	1.6	-	77	-0.057	10.96	0.629

BOX B TEST DATA - ASTM E2780 / ASTM E2515

Client: FPI
Model: I3000
Run #: 1

Job #: 23-229
Tracking #: 169
Technician: AK
Date: 11/27/2023

	Particulate Sampling Data							Flue Gas Data		
Elapsed Time (min)	Gas Meter (ft^3)	Sample Rate (cfm)	Orifice dH (in H_2O)	Meter Temp (°F)	Meter Vacuum (in Hg)	Pro. Rate (%)	Filter (°F)	Flue Draft (in H_2O)	CO_2 (%)	CO (%)
32	5.252	0.165	2.88	81	1.6	-	77	-0.059	11.07	0.857
33	5.420	0.168	2.88	81	1.6	-	77	-0.059	11.14	0.988
34	5.588	0.168	2.88	82	1.6	-	77	-0.060	11.36	1.195
35	5.752	0.164	2.88	82	1.7	-	77	-0.060	11.37	1.403
36	5.920	0.168	2.89	82	1.6	-	77	-0.059	11.41	1.449
37	6.089	0.169	2.89	82	1.8	-	77	-0.060	11.32	1.297
38	6.255	0.166	2.89	83	2.0	-	77	-0.062	11.56	1.304
39	6.421	0.166	2.89	83	1.8	-	77	-0.061	11.54	1.345
40	6.590	0.169	2.89	83	2.1	100	77	-0.060	11.20	1.364
41	6.758	0.168	2.88	84	1.6	-	77	-0.059	11.32	1.254
42	6.923	0.165	2.89	84	1.6	-	77	-0.061	11.42	1.166
43	7.092	0.169	2.89	84	2.1	-	77	-0.061	11.42	1.319
44	7.261	0.169	2.89	85	1.6	-	77	-0.062	11.48	1.457
45	7.427	0.166	2.90	85	1.9	-	77	-0.060	11.50	1.428
46	7.596	0.169	2.90	85	1.9	-	77	-0.061	11.57	1.673
47	7.764	0.168	2.89	85	1.7	-	77	-0.061	11.75	1.713
48	7.931	0.167	2.90	86	1.6	-	77	-0.062	11.38	1.805
49	8.100	0.169	2.91	86	1.7	-	77	-0.062	11.42	1.450
50	8.270	0.170	2.90	86	2.1	100	77	-0.060	11.54	1.535
51	8.437	0.167	2.90	86	1.7	-	77	-0.060	11.67	1.358
52	8.604	0.167	2.90	87	1.9	-	77	-0.059	11.86	1.207
53	8.774	0.170	2.90	87	1.7	-	77	-0.060	11.84	1.121
54	8.944	0.170	2.91	87	1.6	-	77	-0.059	11.90	0.962
55	9.110	0.166	2.90	88	2.0	-	77	-0.059	11.91	0.745
56	9.280	0.170	2.90	88	2.1	-	77	-0.057	11.86	0.846
57	9.449	0.169	2.90	88	1.6	-	77	-0.056	11.79	0.521
58	9.616	0.167	2.91	88	2.0	-	77	-0.060	11.76	0.467
59	9.786	0.170	2.92	88	1.6	-	77	-0.063	11.89	0.327
60	9.957	0.171	2.91	88	1.6	100	77	-0.057	12.12	0.239
61	10.125	0.168	2.92	89	2.0	-	77	-0.061	11.51	0.162
62	10.292	0.167	2.91	89	2.1	-	77	-0.062	11.10	0.143
63	10.462	0.170	2.92	89	2.1	-	77	-0.059	11.07	0.136

BOX B TEST DATA - ASTM E2780 / ASTM E2515

Client: FPI
Model: I3000
Run #: 1

Job #: 23-229
Tracking #: 169
Technician: AK
Date: 11/27/2023

	Particulate Sampling Data							Flue Gas Data		
Elapsed Time (min)	Gas Meter (ft^3)	Sample Rate (cfm)	Orifice dH (in H_2O)	Meter Temp (°F)	Meter Vacuum (in Hg)	Pro. Rate (%)	Filter (°F)	Flue Draft (in H_2O)	CO_2 (%)	CO (%)
64	10.632	0.170	2.92	89	1.8	-	77	-0.056	10.96	0.147
65	10.800	0.168	2.92	89	1.6	-	77	-0.058	11.01	0.154
66	10.970	0.170	2.92	90	1.8	-	77	-0.057	11.06	0.164
67	11.140	0.170	2.92	90	2.1	-	77	-0.058	11.07	0.158
68	11.307	0.167	2.91	90	1.6	-	77	-0.059	11.45	0.211
69	11.476	0.169	2.92	90	1.6	-	77	-0.056	11.51	0.201
70	11.647	0.171	2.92	90	2.1	100	77	-0.056	11.48	0.176
71	11.818	0.171	2.92	91	1.6	-	77	-0.056	11.33	0.135
72	11.984	0.166	2.92	91	1.9	-	77	-0.054	11.30	0.111
73	12.155	0.171	2.92	91	1.7	-	77	-0.054	11.20	0.095
74	12.325	0.170	2.92	91	1.7	-	77	-0.057	11.22	0.101
75	12.493	0.168	2.92	91	2.1	-	77	-0.055	11.23	0.108
76	12.663	0.170	2.92	92	1.6	-	77	-0.056	11.28	0.117
77	12.835	0.172	2.93	92	1.6	-	77	-0.055	11.14	0.107
78	13.004	0.169	2.92	92	1.9	-	77	-0.060	11.01	0.089
79	13.172	0.168	2.92	92	1.8	-	77	-0.056	10.68	0.085
80	13.342	0.170	2.92	92	1.7	101	77	-0.054	10.67	0.085
81	13.513	0.171	2.92	92	2.0	-	77	-0.054	10.59	0.090
82	13.681	0.168	2.93	92	1.9	-	77	-0.054	10.70	0.097
83	13.851	0.170	2.93	93	2.0	-	77	-0.054	10.80	0.100
84	14.024	0.173	2.94	93	1.7	-	77	-0.055	10.82	0.102
85	14.192	0.168	2.93	93	1.5	-	77	-0.057	11.07	0.113
86	14.361	0.169	2.94	93	2.1	-	77	-0.053	11.21	0.117
87	14.532	0.171	2.93	93	1.7	-	77	-0.056	11.27	0.112
88	14.703	0.171	2.93	93	1.9	-	77	-0.054	11.41	0.126
89	14.872	0.169	2.94	93	2.0	-	77	-0.053	11.62	0.137
90	15.042	0.170	2.93	93	2.1	103	77	-0.059	11.73	0.203
91	15.215	0.173	2.94	93	2.0	-	77	-0.058	11.75	0.193
92	15.384	0.169	2.94	94	2.0	-	77	-0.058	11.72	0.218
93	15.553	0.169	2.94	94	2.0	-	77	-0.057	11.77	0.199
94	15.724	0.171	2.93	94	2.0	-	77	-0.060	11.77	0.203
95	15.895	0.171	2.94	94	1.7	-	77	-0.059	11.89	0.200

BOX B TEST DATA - ASTM E2780 / ASTM E2515

Client: FPI
Model: I3000
Run #: 1

Job #: 23-229
Tracking #: 169
Technician: AK
Date: 11/27/2023

	Particulate Sampling Data							Flue Gas Data		
Elapsed Time (min)	Gas Meter (ft^3)	Sample Rate (cfm)	Orifice dH (in H_2O)	Meter Temp (°F)	Meter Vacuum (in Hg)	Pro. Rate (%)	Filter (°F)	Flue Draft (in H_2O)	CO_2 (%)	CO (%)
96	16.064	0.169	2.94	94	1.6	-	77	-0.056	11.76	0.252
97	16.235	0.171	2.94	94	1.6	-	77	-0.055	11.81	0.281
98	16.407	0.172	2.94	94	1.8	-	77	-0.059	11.80	0.278
99	16.578	0.171	2.94	94	1.8	-	77	-0.059	11.79	0.270
100	16.746	0.168	2.94	94	1.8	101	77	-0.057	11.76	0.248
101	16.918	0.172	2.94	94	1.6	-	77	-0.057	11.69	0.226
102	17.089	0.171	2.94	94	2.0	-	77	-0.058	11.76	0.242
103	17.258	0.169	2.94	94	2.0	-	77	-0.057	11.60	0.174
104	17.427	0.169	2.93	94	1.6	-	77	-0.054	11.64	0.182
105	17.600	0.173	2.94	94	1.6	-	76	-0.056	11.67	0.140
106	17.771	0.171	2.94	95	1.6	-	76	-0.053	11.59	0.122
107	17.940	0.169	2.94	95	1.7	-	76	-0.057	11.45	0.122
108	18.112	0.172	2.95	95	1.7	-	76	-0.055	11.48	0.109
109	18.283	0.171	2.94	95	1.8	-	76	-0.054	11.46	0.104
110	18.453	0.170	2.94	95	1.8	100	77	-0.058	11.27	0.107
111	18.622	0.169	2.93	95	1.7	-	76	-0.057	11.40	0.113
112	18.794	0.172	2.94	95	1.7	-	76	-0.056	11.44	0.130
113	18.965	0.171	2.94	95	2.0	-	76	-0.057	11.60	0.158
114	19.134	0.169	2.94	95	1.6	-	76	-0.057	11.56	0.229
115	19.305	0.171	2.94	95	1.7	-	76	-0.056	11.61	0.224
116	19.478	0.173	2.94	95	1.6	-	76	-0.056	11.64	0.289
117	19.648	0.170	2.94	95	1.7	-	76	-0.056	11.61	0.268
118	19.817	0.169	2.93	95	1.8	-	76	-0.056	11.68	0.226
119	19.989	0.172	2.94	95	1.8	-	76	-0.056	11.78	0.277
120	20.161	0.172	2.94	95	1.8	101	76	-0.056	11.60	0.178
121	20.329	0.168	2.94	95	2.0	-	76	-0.056	11.40	0.137
122	20.499	0.170	2.94	95	2.0	-	76	-0.057	11.13	0.132
123	20.672	0.173	2.94	95	1.6	-	76	-0.055	10.82	0.133
124	20.843	0.171	2.94	95	1.7	-	76	-0.055	10.84	0.118
125	21.012	0.169	2.94	95	1.9	-	76	-0.056	10.63	0.122
126	21.184	0.172	2.94	95	1.7	-	76	-0.057	10.67	0.125
127	21.356	0.172	2.94	96	1.6	-	76	-0.055	10.52	0.118

BOX B TEST DATA - ASTM E2780 / ASTM E2515

Client: FPI
Model: I3000
Run #: 1

Job #: 23-229
Tracking #: 169
Technician: AK
Date: 11/27/2023

	Particulate Sampling Data							Flue Gas Data		
Elapsed Time (min)	Gas Meter (ft^3)	Sample Rate (cfm)	Orifice dH (in H_2O)	Meter Temp (°F)	Meter Vacuum (in Hg)	Pro. Rate (%)	Filter (°F)	Flue Draft (in H_2O)	CO_2 (%)	CO (%)
128	21.526	0.170	2.94	96	1.8	-	76	-0.056	10.45	0.116
129	21.695	0.169	2.94	96	1.7	-	76	-0.057	10.45	0.117
130	21.867	0.172	2.94	96	1.7	101	76	-0.055	10.49	0.112
131	22.039	0.172	2.95	96	1.7	-	76	-0.056	10.56	0.127
132	22.208	0.169	2.94	96	2.0	-	76	-0.056	10.54	0.132
133	22.379	0.171	2.94	96	2.0	-	76	-0.055	10.70	0.140
134	22.552	0.173	2.94	96	1.9	-	76	-0.055	10.70	0.140
135	22.723	0.171	2.94	96	1.6	-	76	-0.056	10.73	0.127
136	22.892	0.169	2.94	96	1.6	-	76	-0.057	10.87	0.125
137	23.064	0.172	2.94	96	1.6	-	76	-0.055	10.87	0.134
138	23.236	0.172	2.94	96	1.7	-	76	-0.054	10.88	0.135
139	23.406	0.170	2.94	96	1.6	-	76	-0.054	10.94	0.155
140	23.575	0.169	2.94	96	1.8	99	76	-0.054	11.00	0.200
141	23.748	0.173	2.94	96	1.6	-	76	-0.056	10.98	0.218
142	23.920	0.172	2.94	96	2.0	-	76	-0.055	10.74	0.164
143	24.088	0.168	2.94	96	2.0	-	76	-0.057	10.69	0.155
144	24.260	0.172	2.94	96	1.6	-	76	-0.056	10.84	0.250
145	24.434	0.174	2.94	96	2.0	-	76	-0.057	10.53	0.242
146	24.603	0.169	2.94	96	1.6	-	76	-0.056	10.23	0.130
147	24.773	0.170	2.94	96	1.8	-	76	-0.055	9.88	0.119
148	24.945	0.172	2.95	96	1.7	-	76	-0.054	9.76	0.102
149	25.117	0.172	2.94	96	1.6	-	76	-0.055	9.73	0.101
150	25.285	0.168	2.94	96	1.9	99	76	-0.054	9.76	0.104
151	25.456	0.171	2.94	96	2.0	-	76	-0.054	9.61	0.096
152	25.629	0.173	2.94	96	2.0	-	76	-0.054	9.54	0.098
153	25.800	0.171	2.94	96	1.6	-	76	-0.052	9.59	0.095
154	25.970	0.170	2.94	96	1.8	-	76	-0.051	9.53	0.090
155	26.142	0.172	2.95	96	1.8	-	76	-0.052	9.46	0.087
156	26.314	0.172	2.94	96	2.0	-	76	-0.054	9.39	0.080
157	26.484	0.170	2.95	96	1.7	-	76	-0.054	9.33	0.080
158	26.654	0.170	2.94	96	1.8	-	76	-0.054	9.23	0.084
159	26.827	0.173	2.94	96	2.0	-	76	-0.050	9.30	0.085

BOX B TEST DATA - ASTM E2780 / ASTM E2515

Client: FPI
Model: I3000
Run #: 1

Job #: 23-229
Tracking #: 169
Technician: AK
Date: 11/27/2023

	Particulate Sampling Data							Flue Gas Data		
Elapsed Time (min)	Gas Meter (ft^3)	Sample Rate (cfm)	Orifice dH (in H_2O)	Meter Temp (°F)	Meter Vacuum (in Hg)	Pro. Rate (%)	Filter (°F)	Flue Draft (in H_2O)	CO_2 (%)	CO (%)
160	26.998	0.171	2.94	96	1.7	99	76	-0.052	9.27	0.080
161	27.167	0.169	2.94	96	2.1	-	75	-0.052	9.22	0.082
162	27.339	0.172	2.95	96	1.7	-	75	-0.051	9.09	0.084
163	27.511	0.172	2.94	96	2.0	-	75	-0.052	8.94	0.084
164	27.683	0.172	2.95	96	1.8	-	75	-0.054	8.72	0.085
165	27.853	0.170	2.95	96	1.8	-	75	-0.049	8.69	0.092
166	28.025	0.172	2.95	96	1.9	-	75	-0.050	8.50	0.081
167	28.197	0.172	2.95	96	1.7	-	75	-0.050	8.38	0.083
168	28.367	0.170	2.95	96	1.6	-	75	-0.049	8.35	0.077
169	28.537	0.170	2.95	96	1.7	-	75	-0.048	8.34	0.078
170	28.710	0.173	2.94	96	1.6	99	75	-0.049	8.29	0.067
171	28.881	0.171	2.94	96	1.6	-	75	-0.047	8.17	0.070
172	29.050	0.169	2.95	96	1.7	-	75	-0.049	8.06	0.062
173	29.222	0.172	2.95	96	1.7	-	75	-0.049	7.87	0.062
174	29.395	0.173	2.95	96	1.6	-	75	-0.046	7.98	0.059
175	29.566	0.171	2.95	96	2.0	-	75	-0.047	8.08	0.060
176	29.736	0.170	2.95	96	1.7	-	75	-0.047	8.11	0.052
177	29.908	0.172	2.94	96	2.0	-	75	-0.048	8.15	0.060
178	30.081	0.173	2.94	96	1.8	-	75	-0.046	8.09	0.060
179	30.251	0.170	2.95	96	1.8	-	75	-0.044	8.13	0.063
180	30.421	0.170	2.95	96	1.8	99	75	-0.046	8.08	0.057
181	30.593	0.172	2.95	96	1.6	-	75	-0.045	8.15	0.051
182	30.765	0.172	2.95	96	1.7	-	75	-0.047	8.19	0.053
183	30.934	0.169	2.95	96	2.1	-	75	-0.048	8.06	0.055
184	31.106	0.172	2.95	96	1.6	-	75	-0.046	8.06	0.051
185	31.278	0.172	2.95	96	2.1	-	75	-0.045	8.14	0.053
186	31.450	0.172	2.95	96	2.0	-	74	-0.045	8.03	0.049
187	31.620	0.170	2.95	96	1.7	-	74	-0.046	8.10	0.046
188	31.792	0.172	2.95	96	1.7	-	74	-0.046	8.10	0.044
189	31.964	0.172	2.94	96	2.0	-	74	-0.044	8.07	0.048
190	32.135	0.171	2.95	96	2.0	99	74	-0.044	8.13	0.046
191	32.304	0.169	2.95	96	2.1	-	74	-0.043	8.09	0.049

BOX B TEST DATA - ASTM E2780 / ASTM E2515

Client: FPI
Model: I3000
Run #: 1

Job #: 23-229
Tracking #: 169
Technician: AK
Date: 11/27/2023

	Particulate Sampling Data							Flue Gas Data		
Elapsed Time (min)	Gas Meter (ft^3)	Sample Rate (cfm)	Orifice dH (in H_2O)	Meter Temp (°F)	Meter Vacuum (in Hg)	Pro. Rate (%)	Filter (°F)	Flue Draft (in H_2O)	CO_2 (%)	CO (%)
192	32.477	0.173	2.96	96	1.5	-	74	-0.044	8.04	0.049
193	32.649	0.172	2.95	96	1.9	-	74	-0.042	8.06	0.049
194	32.818	0.169	2.95	96	2.1	-	74	-0.043	7.98	0.055
195	32.990	0.172	2.96	96	1.7	-	74	-0.040	8.03	0.055
196	33.162	0.172	2.95	96	1.8	-	74	-0.043	8.07	0.050
197	33.334	0.172	2.95	96	1.8	-	74	-0.042	8.11	0.057
198	33.504	0.170	2.95	96	1.6	-	74	-0.044	8.00	0.052
199	33.676	0.172	2.95	96	1.7	-	74	-0.043	7.91	0.049
200	33.849	0.173	2.95	96	1.7	99	74	-0.042	8.10	0.054
201	34.019	0.170	2.95	96	1.5	-	74	-0.042	8.14	0.061
202	34.189	0.170	2.95	96	1.8	-	74	-0.043	8.10	0.061
203	34.361	0.172	2.95	96	2.0	-	74	-0.043	8.13	0.068
204	34.533	0.172	2.95	96	1.8	-	74	-0.044	7.98	0.067
205	34.702	0.169	2.95	96	1.7	-	74	-0.044	8.05	0.069
206	34.874	0.172	2.96	96	1.5	-	74	-0.041	8.07	0.071
207	35.047	0.173	2.96	96	1.6	-	74	-0.043	8.12	0.070
208	35.218	0.171	2.95	96	1.7	-	74	-0.042	8.30	0.071
209	35.388	0.170	2.96	96	2.1	-	74	-0.041	8.17	0.072
210	35.561	0.173	2.96	96	2.0	99	74	-0.042	8.13	0.068
211	35.733	0.172	2.95	96	1.5	-	74	-0.043	8.07	0.070
212	35.903	0.170	2.95	96	2.1	-	74	-0.040	7.95	0.066
213	36.074	0.171	2.95	96	1.6	-	74	-0.042	7.95	0.065
214	36.246	0.172	2.95	96	1.7	-	74	-0.039	8.05	0.074
215	36.418	0.172	2.95	96	1.6	-	74	-0.041	7.92	0.066
216	36.587	0.169	2.95	96	2.0	-	74	-0.043	7.95	0.073
217	36.758	0.171	2.95	96	1.6	-	74	-0.040	7.82	0.073
218	36.932	0.174	2.96	96	2.1	-	73	-0.039	7.86	0.070
219	37.103	0.171	2.95	96	1.8	-	74	-0.040	7.84	0.074
220	37.272	0.169	2.95	96	2.0	100	73	-0.042	8.03	0.079
221	37.445	0.173	2.95	96	1.8	-	73	-0.040	7.99	0.071
222	37.618	0.173	2.95	96	1.6	-	73	-0.039	8.01	0.063
223	37.788	0.170	2.94	96	1.8	-	73	-0.042	8.09	0.068

BOX B TEST DATA - ASTM E2780 / ASTM E2515

Client: FPI
Model: I3000
Run #: 1

Job #: 23-229
Tracking #: 169
Technician: AK
Date: 11/27/2023

	Particulate Sampling Data							Flue Gas Data		
Elapsed Time (min)	Gas Meter (ft^3)	Sample Rate (cfm)	Orifice dH (in H_2O)	Meter Temp (°F)	Meter Vacuum (in Hg)	Pro. Rate (%)	Filter (°F)	Flue Draft (in H_2O)	CO_2 (%)	CO (%)
224	37.958	0.170	2.95	96	1.8	-	73	-0.042	8.02	0.062
225	38.130	0.172	2.95	96	1.6	-	73	-0.040	8.12	0.060
226	38.303	0.173	2.95	96	1.5	-	73	-0.042	8.00	0.063
227	38.471	0.168	2.95	96	1.6	-	73	-0.041	7.97	0.065
228	38.642	0.171	2.95	96	1.7	-	73	-0.040	7.90	0.062
229	38.816	0.174	2.95	96	1.7	-	73	-0.038	7.97	0.064
230	38.987	0.171	2.95	96	1.8	101	73	-0.040	7.75	0.048
231	39.156	0.169	2.95	96	1.7	-	73	-0.039	7.78	0.056
232	39.329	0.173	2.95	96	1.7	-	73	-0.038	7.75	0.060
233	39.502	0.173	2.96	96	1.9	-	73	-0.042	7.79	0.058
234	39.672	0.170	2.95	96	1.5	-	73	-0.039	7.64	0.056
235	39.842	0.170	2.95	96	1.8	-	73	-0.040	7.74	0.062
236	40.014	0.172	2.95	96	1.6	-	73	-0.038	7.70	0.057
237	40.187	0.173	2.95	96	1.6	-	73	-0.038	7.68	0.064
238	40.355	0.168	2.95	96	1.6	-	73	-0.040	7.67	0.067
239	40.526	0.171	2.95	96	1.6	-	73	-0.042	7.65	0.057
240	40.699	0.173	2.95	96	1.8	99	73	-0.041	7.69	0.063
241	40.871	0.172	2.96	96	1.6	-	73	-0.040	7.58	0.059
242	41.040	0.169	2.95	96	1.6	-	73	-0.041	7.66	0.066
243	41.213	0.173	2.95	96	2.1	-	73	-0.038	7.57	0.058
244	41.386	0.173	2.95	96	1.9	-	73	-0.037	7.58	0.061
245	41.556	0.170	2.95	96	2.1	-	73	-0.040	7.60	0.061
246	41.726	0.170	2.95	96	2.1	-	73	-0.038	7.59	0.066
247	41.898	0.172	2.96	96	2.1	-	73	-0.039	7.60	0.063
248	42.071	0.173	2.95	96	1.7	-	73	-0.037	7.59	0.066
249	42.239	0.168	2.96	95	1.9	-	73	-0.040	7.59	0.070
250	42.410	0.171	2.95	95	1.7	99	73	-0.039	7.55	0.067
251	42.583	0.173	2.95	95	1.9	-	73	-0.038	7.55	0.065
252	42.755	0.172	2.95	96	1.9	-	73	-0.037	7.51	0.072
253	42.924	0.169	2.95	96	1.7	-	73	-0.037	7.57	0.068
254	43.096	0.172	2.95	95	1.8	-	73	-0.037	7.47	0.066
255	43.269	0.173	2.95	95	2.0	-	73	-0.039	7.66	0.071

BOX B TEST DATA - ASTM E2780 / ASTM E2515

Client: FPI
Model: I3000
Run #: 1

Job #: 23-229
Tracking #: 169
Technician: AK
Date: 11/27/2023

	Particulate Sampling Data							Flue Gas Data		
Elapsed Time (min)	Gas Meter (ft^3)	Sample Rate (cfm)	Orifice dH (in H_2O)	Meter Temp (°F)	Meter Vacuum (in Hg)	Pro. Rate (%)	Filter (°F)	Flue Draft (in H_2O)	CO_2 (%)	CO (%)
256	43.439	0.170	2.95	95	1.5	-	73	-0.040	7.48	0.072
257	43.608	0.169	2.95	95	1.9	-	73	-0.039	7.45	0.071
258	43.780	0.172	2.95	95	1.8	-	73	-0.037	7.58	0.081
259	43.952	0.172	2.95	95	1.9	-	73	-0.036	7.57	0.076
260	44.121	0.169	2.95	95	1.9	99	73	-0.038	7.59	0.080
261	44.292	0.171	2.96	95	2.1	-	73	-0.037	7.54	0.076
262	44.465	0.173	2.96	95	1.6	-	72	-0.039	7.55	0.074
263	44.637	0.172	2.95	95	2.1	-	72	-0.037	7.57	0.078
264	44.806	0.169	2.96	95	1.5	-	72	-0.037	7.57	0.075
265	44.979	0.173	2.96	95	2.0	-	72	-0.038	7.64	0.065
266	45.148	0.169	2.96	95	1.7	-	72	-0.036	7.60	0.058
267	45.321	0.173	2.96	95	1.6	-	72	-0.039	7.48	0.060
268	45.491	0.170	2.95	95	1.7	-	72	-0.038	7.61	0.062
269	45.664	0.173	2.95	95	1.9	-	72	-0.037	7.40	0.058
270	45.835	0.171	2.96	95	1.5	99	72	-0.037	7.54	0.063
271	46.004	0.169	2.95	95	2.0	-	72	-0.038	7.46	0.061
272	46.176	0.172	2.96	95	1.6	-	72	-0.038	7.47	0.066
273	46.349	0.173	2.96	95	2.1	-	72	-0.037	7.39	0.062
274	46.520	0.171	2.95	95	1.6	-	72	-0.036	7.42	0.062
275	46.690	0.170	2.96	95	2.0	-	72	-0.036	7.51	0.062
276	46.862	0.172	2.96	95	1.8	-	72	-0.037	7.48	0.063
277	47.034	0.172	2.95	95	2.1	-	72	-0.036	7.51	0.066
278	47.205	0.171	2.96	95	2.0	-	72	-0.038	7.57	0.051
279	47.374	0.169	2.95	95	1.5	-	72	-0.039	7.50	0.053
280	47.547	0.173	2.96	95	2.0	100	72	-0.038	7.52	0.055
281	47.718	0.171	2.95	95	1.6	-	72	-0.039	7.43	0.053
282	47.888	0.170	2.96	95	1.9	-	72	-0.037	7.44	0.058
283	48.059	0.171	2.96	95	2.1	-	72	-0.037	7.45	0.051
284	48.232	0.173	2.96	95	1.7	-	72	-0.038	7.45	0.058
285	48.404	0.172	2.96	95	1.6	-	72	-0.035	7.40	0.051
286	48.573	0.169	2.96	95	1.6	-	72	-0.035	7.49	0.061
287	48.746	0.173	2.96	95	1.8	-	72	-0.036	7.42	0.057

BOX B TEST DATA - ASTM E2780 / ASTM E2515

Client: FPI
Model: I3000
Run #: 1

Job #: 23-229
Tracking #: 169
Technician: AK
Date: 11/27/2023

	Particulate Sampling Data							Flue Gas Data		
Elapsed Time (min)	Gas Meter (ft^3)	Sample Rate (cfm)	Orifice dH (in H_2O)	Meter Temp (°F)	Meter Vacuum (in Hg)	Pro. Rate (%)	Filter (°F)	Flue Draft (in H_2O)	CO_2 (%)	CO (%)
288	48.918	0.172	2.96	95	1.6	-	72	-0.037	7.51	0.056
289	49.089	0.171	2.96	95	1.6	-	72	-0.038	7.49	0.059
290	49.259	0.170	2.96	95	2.0	102	72	-0.038	7.51	0.054
291	49.431	0.172	2.96	95	2.1	-	72	-0.037	7.39	0.058
292	49.603	0.172	2.96	95	2.0	-	72	-0.037	7.43	0.056
293	49.772	0.169	2.95	95	1.8	-	72	-0.036	7.39	0.056
294	49.943	0.171	2.96	95	1.8	-	72	-0.035	7.45	0.058
295	50.116	0.173	2.97	95	2.1	-	72	-0.036	7.53	0.063
296	50.288	0.172	2.95	95	2.0	-	72	-0.037	7.46	0.054
297	50.457	0.169	2.97	95	1.6	-	72	-0.035	7.41	0.062
298	50.630	0.173	2.96	95	2.0	-	72	-0.038	7.42	0.063
299	50.802	0.172	2.96	95	2.0	-	72	-0.037	7.39	0.065
300	50.973	0.171	2.96	95	1.5	100	72	-0.034	7.49	0.077
301	51.143	0.170	2.96	95	2.0	-	72	-0.036	7.44	0.074
302	51.315	0.172	2.95	95	2.1	-	72	-0.038	7.44	0.070
303	51.487	0.172	2.96	95	2.1	-	72	-0.034	7.47	0.074
304	51.656	0.169	2.95	95	2.1	-	71	-0.038	7.47	0.075
305	51.827	0.171	2.96	95	1.5	-	71	-0.035	7.40	0.074
306	52.000	0.173	2.96	95	1.9	-	71	-0.038	7.46	0.074
307	52.172	0.172	2.96	95	1.6	-	71	-0.037	7.45	0.074
308	52.341	0.169	2.96	95	1.7	-	71	-0.036	7.47	0.077
309	52.514	0.173	2.96	95	1.5	-	71	-0.037	7.35	0.074
310	52.687	0.173	2.96	95	1.5	100	71	-0.036	7.43	0.074
311	52.857	0.170	2.95	95	1.7	-	71	-0.037	7.45	0.077
312	53.027	0.170	2.96	95	2.1	-	71	-0.036	7.53	0.075
313	53.199	0.172	2.96	95	2.1	-	71	-0.036	7.39	0.077
314	53.371	0.172	2.96	95	1.7	-	71	-0.036	7.42	0.078
315	53.540	0.169	2.95	95	1.6	-	71	-0.036	7.66	0.077
316	53.711	0.171	2.96	95	1.9	-	71	-0.035	7.48	0.079
317	53.884	0.173	2.96	95	1.9	-	71	-0.037	7.48	0.076
318	54.056	0.172	2.96	95	1.8	-	71	-0.035	7.45	0.079
319	54.225	0.169	2.96	95	1.6	-	71	-0.036	7.57	0.080

BOX B TEST DATA - ASTM E2780 / ASTM E2515

Client: FPI
Model: I3000
Run #: 1

Job #: 23-229
Tracking #: 169
Technician: AK
Date: 11/27/2023

	Particulate Sampling Data							Flue Gas Data		
Elapsed Time (min)	Gas Meter (ft^3)	Sample Rate (cfm)	Orifice dH (in H_2O)	Meter Temp (°F)	Meter Vacuum (in Hg)	Pro. Rate (%)	Filter (°F)	Flue Draft (in H_2O)	CO_2 (%)	CO (%)
320	54.398	0.173	2.96	95	1.5	102	71	-0.036	7.48	0.079
321	54.571	0.173	2.97	95	1.9	-	71	-0.037	7.55	0.076
322	54.741	0.170	2.96	95	1.6	-	71	-0.038	7.61	0.087
323	54.911	0.170	2.96	95	1.6	-	71	-0.035	7.45	0.072
324	55.083	0.172	2.96	95	2.0	-	71	-0.036	7.42	0.067
325	55.255	0.172	2.96	95	1.8	-	71	-0.038	7.29	0.061
326	55.424	0.169	2.96	95	1.7	-	71	-0.036	7.32	0.062
327	55.595	0.171	2.96	95	2.1	-	71	-0.035	7.35	0.061
328	55.768	0.173	2.96	95	1.9	-	71	-0.037	7.37	0.070
329	55.939	0.171	2.96	94	2.1	-	71	-0.035	7.49	0.068
330	56.109	0.170	2.96	94	1.8	102	71	-0.035	7.42	0.071
331	56.281	0.172	2.96	94	2.0	-	71	-0.036	7.38	0.069
332	56.454	0.173	2.96	94	1.8	-	70	-0.037	7.33	0.070
333	56.624	0.170	2.96	94	1.8	-	70	-0.036	7.39	0.070
334	56.794	0.170	2.96	94	1.9	-	70	-0.035	7.41	0.069
335	56.966	0.172	2.96	94	1.5	-	70	-0.036	7.49	0.069
336	57.139	0.173	2.96	94	1.8	-	70	-0.038	7.46	0.068
337	57.307	0.168	2.96	94	1.6	-	70	-0.035	7.46	0.071
338	57.478	0.171	2.96	94	1.8	-	70	-0.036	7.44	0.076
339	57.652	0.174	2.96	94	1.5	-	70	-0.036	7.46	0.072
340	57.823	0.171	2.96	94	1.8	100	70	-0.035	7.37	0.082
341	57.992	0.169	2.97	94	1.8	-	70	-0.035	7.45	0.079
342	58.165	0.173	2.97	94	1.7	-	70	-0.036	7.41	0.081
343	58.337	0.172	2.96	94	1.9	-	70	-0.035	7.41	0.078
344	58.508	0.171	2.95	94	1.6	-	70	-0.032	7.40	0.083
345	58.677	0.169	2.96	94	1.9	-	70	-0.035	7.34	0.078
346	58.849	0.172	2.96	94	2.1	-	70	-0.036	7.32	0.078
347	59.021	0.172	2.96	94	2.1	-	70	-0.036	7.27	0.078
348	59.190	0.169	2.95	94	1.5	-	70	-0.035	7.26	0.089
349	59.361	0.171	2.96	94	2.1	-	70	-0.035	7.26	0.083
350	59.535	0.174	2.97	94	1.7	99	70	-0.033	7.28	0.081
351	59.706	0.171	2.96	94	1.7	-	70	-0.035	7.20	0.079

BOX B TEST DATA - ASTM E2780 / ASTM E2515

Client: FPI
Model: I3000
Run #: 1

Job #: 23-229
Tracking #: 169
Technician: AK
Date: 11/27/2023

	Particulate Sampling Data							Flue Gas Data		
Elapsed Time (min)	Gas Meter (ft^3)	Sample Rate (cfm)	Orifice dH (in H_2O)	Meter Temp (°F)	Meter Vacuum (in Hg)	Pro. Rate (%)	Filter (°F)	Flue Draft (in H_2O)	CO_2 (%)	CO (%)
352	59.875	0.169	2.96	94	2.0	-	70	-0.038	7.22	0.080
353	60.048	0.173	2.96	94	2.1	-	70	-0.036	7.13	0.085
354	60.220	0.172	2.96	94	1.9	-	70	-0.035	7.26	0.087
355	60.390	0.170	2.96	94	1.6	-	70	-0.034	7.30	0.093
356	60.560	0.170	2.96	94	1.6	-	70	-0.035	7.35	0.092
357	60.732	0.172	2.96	94	1.5	-	70	-0.036	7.35	0.094
358	60.904	0.172	2.96	94	1.9	-	70	-0.035	7.34	0.097
359	61.073	0.169	2.96	94	1.9	-	70	-0.035	7.32	0.096
360	61.244	0.171	2.96	94	1.9	100	70	-0.037	7.21	0.097
361	61.417	0.173	2.96	94	1.5	-	70	-0.035	7.31	0.095
362	61.588	0.171	2.96	94	1.7	-	70	-0.035	7.09	0.091
363	61.758	0.170	2.96	94	1.9	-	70	-0.036	7.13	0.090
364	61.930	0.172	2.96	94	2.1	-	70	-0.036	7.15	0.091
365	62.102	0.172	2.95	94	1.5	-	70	-0.035	7.11	0.094
366	62.272	0.170	2.96	94	2.0	-	70	-0.037	7.16	0.104
367	62.442	0.170	2.96	94	1.8	-	70	-0.035	7.09	0.094
368	62.614	0.172	2.96	94	1.7	-	70	-0.034	7.15	0.093
369	62.785	0.171	2.96	94	1.5	-	69	-0.035	7.15	0.089
370	62.955	0.170	2.96	94	1.8	102	69	-0.035	7.02	0.091
371	63.126	0.171	2.96	94	1.9	-	69	-0.037	7.07	0.093
372	63.299	0.173	2.96	94	2.1	-	69	-0.033	7.15	0.086
373	63.471	0.172	2.97	94	2.0	-	69	-0.037	7.13	0.097
374	63.640	0.169	2.97	94	1.6	-	69	-0.034	7.10	0.097
375	63.812	0.172	2.96	94	2.1	-	69	-0.035	7.14	0.094
376	63.984	0.172	2.96	94	1.7	-	69	-0.035	7.06	0.098
377	64.154	0.170	2.96	94	1.9	-	69	-0.037	7.11	0.099
378	64.324	0.170	2.96	94	1.6	-	69	-0.035	7.01	0.101
379	64.496	0.172	2.95	94	1.6	-	69	-0.034	7.12	0.106
380	64.668	0.172	2.96	94	1.8	102	69	-0.034	7.03	0.105
381	64.837	0.169	2.97	94	2.0	-	69	-0.036	7.01	0.110
382	65.008	0.171	2.96	94	1.8	-	69	-0.034	6.87	0.100
383	65.181	0.173	2.97	94	2.1	-	69	-0.034	6.85	0.104

BOX B TEST DATA - ASTM E2780 / ASTM E2515

Client: FPI
Model: I3000
Run #: 1

Job #: 23-229
Tracking #: 169
Technician: AK
Date: 11/27/2023

	Particulate Sampling Data							Flue Gas Data		
Elapsed Time (min)	Gas Meter (ft^3)	Sample Rate (cfm)	Orifice dH (in H_2O)	Meter Temp (°F)	Meter Vacuum (in Hg)	Pro. Rate (%)	Filter (°F)	Flue Draft (in H_2O)	CO_2 (%)	CO (%)
384	65.353	0.172	2.96	94	1.7	-	69	-0.037	6.93	0.103
385	65.522	0.169	2.96	94	1.7	-	69	-0.034	6.89	0.101
386	65.694	0.172	2.96	94	1.7	-	69	-0.034	6.86	0.103
387	65.866	0.172	2.96	93	2.0	-	69	-0.036	6.80	0.107
388	66.035	0.169	2.96	93	1.5	-	69	-0.035	6.91	0.107
389	66.205	0.170	2.95	93	1.7	-	69	-0.036	6.88	0.112
390	66.378	0.173	2.96	93	2.0	102	69	-0.034	6.85	0.105
391	66.550	0.172	2.97	93	1.6	-	69	-0.034	6.92	0.118
392	66.718	0.168	2.96	93	1.9	-	69	-0.034	6.94	0.126
393	66.890	0.172	2.97	93	1.7	-	69	-0.036	7.06	0.093
394	67.064	0.174	2.96	93	1.7	-	69	-0.037	7.11	0.090
395	67.234	0.170	2.96	93	1.9	-	69	-0.037	7.07	0.090
396	67.403	0.169	2.96	93	2.0	-	69	-0.035	7.05	0.080
397	67.575	0.172	2.96	93	1.7	-	69	-0.035	7.04	0.080
398	67.747	0.172	2.96	93	1.9	-	69	-0.036	6.92	0.076
399	67.915	0.168	2.95	93	1.7	-	69	-0.037	6.86	0.078
400	68.086	0.171	2.96	93	2.0	102	69	-0.035	6.82	0.081
401	68.259	0.173	2.96	93	1.9	102	69	-0.034	6.83	0.080
Avg/Tot	68.259	0.170	2.94	92.5	1.8	100	73.8	-0.046	8.77	0.181

BOX C TEST DATA - ASTM E2780 / ASTM E2515

Client: FPI
Model: I3000
Run #: 1

Job #: 23-229
Tracking #: 169
Technician: AK
Date: 11/27/2023

	Particulate Sampling Data						
Elapsed Time (min)	Gas Meter (ft^3)	Sample Rate (cfm)	Orifice dH (in H_2O)	Meter Temp (°F)	Meter Vacuum (in Hg)	Pro. Rate (%)	Filter (°F)
0	0.000		0.62	72	1.6		72
1	0.143	0.143	0.94	71	1.7	-	73
2	0.285	0.142	0.96	71	1.7	-	73
3	0.427	0.142	0.94	71	1.7	-	73
4	0.570	0.143	0.96	71	1.6	-	73
5	0.712	0.142	0.95	71	1.7	-	73
6	0.855	0.143	0.96	72	1.6	-	73
7	0.999	0.144	0.98	72	1.6	-	73
8	1.142	0.143	0.96	72	1.7	-	73
9	1.287	0.145	0.97	72	1.7	-	73
10	1.432	0.145	0.99	73	1.7	97	73
11	1.577	0.145	0.98	73	1.7	-	73
12	1.722	0.145	0.98	73	1.6	-	73
13	1.869	0.147	0.99	73	1.7	-	74
14	2.014	0.145	0.99	74	1.5	-	73
15	2.160	0.146	0.98	74	1.6	-	74
16	2.306	0.146	0.98	74	1.7	-	74
17	2.453	0.147	1.00	75	1.6	-	74
18	2.599	0.146	1.00	75	1.7	-	74
19	2.745	0.146	0.98	75	1.6	-	74
20	2.892	0.147	0.99	75	1.6	99	74
21	3.040	0.148	1.00	75	1.6	-	74
22	3.187	0.147	1.01	75	1.6	-	74
23	3.333	0.146	1.00	75	1.7	-	74
24	3.480	0.147	0.99	76	1.8	-	74
25	3.628	0.148	1.01	76	1.8	-	74
26	3.777	0.149	1.01	76	1.8	-	74
27	3.925	0.148	1.02	77	1.7	-	74
28	4.073	0.148	1.01	77	1.7	-	74
29	4.221	0.148	1.00	77	1.8	-	74
30	4.369	0.148	1.01	77	1.8	99	74
31	4.519	0.150	1.02	77	1.7	-	74

BOX C TEST DATA - ASTM E2780 / ASTM E2515

Client: FPI
Model: I3000
Run #: 1

Job #: 23-229
Tracking #: 169
Technician: AK
Date: 11/27/2023

	Particulate Sampling Data						
Elapsed Time (min)	Gas Meter (ft^3)	Sample Rate (cfm)	Orifice dH (in H_2O)	Meter Temp (°F)	Meter Vacuum (in Hg)	Pro. Rate (%)	Filter (°F)
32	4.668	0.149	1.03	78	1.6	-	74
33	4.817	0.149	1.03	78	1.6	-	74
34	4.967	0.150	1.03	78	1.8	-	74
35	5.116	0.149	1.02	79	1.8	-	74
36	5.266	0.150	1.02	79	1.6	-	74
37	5.416	0.150	1.02	79	1.6	-	74
38	5.566	0.150	1.02	79	1.8	-	74
39	5.716	0.150	1.03	80	1.8	-	74
40	5.867	0.151	1.03	80	1.7	100	74
41	6.018	0.151	1.04	80	1.8	-	74
42	6.169	0.151	1.04	80	1.7	-	74
43	6.320	0.151	1.04	81	1.6	-	74
44	6.471	0.151	1.04	81	1.6	-	74
45	6.622	0.151	1.04	81	1.8	-	74
46	6.773	0.151	1.05	81	1.7	-	74
47	6.924	0.151	1.04	81	1.8	-	74
48	7.076	0.152	1.04	81	1.8	-	74
49	7.228	0.152	1.04	81	1.7	-	74
50	7.380	0.152	1.04	81	1.7	101	74
51	7.532	0.152	1.04	81	1.7	-	74
52	7.683	0.151	1.04	81	1.8	-	74
53	7.836	0.153	1.04	81	1.6	-	74
54	7.988	0.152	1.04	82	1.7	-	74
55	8.140	0.152	1.04	81	1.6	-	74
56	8.293	0.153	1.04	82	1.7	-	74
57	8.445	0.152	1.04	82	1.7	-	74
58	8.598	0.153	1.04	82	1.8	-	74
59	8.751	0.153	1.04	82	1.6	-	73
60	8.904	0.153	1.05	82	1.8	102	74
Avg/Tot	8.904	0.148	1.00	77.0	1.7	100	73.5

WOODSTOVE SURFACE TEMPERATURE DATA

Client: FPI
Model: I3000
Run #: 1

Job #: 23-229
Tracking #: 169
Technician: AK
Date: 11/27/2023

Stove ΔT: 75

	Temperature Data (°F)						
Elapsed Time (min)	FB Left	FB Right	FB Back	FB Top	FB Bottom	Stove Surface Average	Catalyst Exit
0	331	347	210	345	279	302.3	523.8
1	330	346	210	334	285	300.9	511.2
2	328	344	210	332	292	301.3	550.8
3	326	343	209	334	299	302.2	607.4
4	325	342	210	337	305	303.8	722.0
5	322	340	211	350	312	306.9	860.5
6	320	338	211	365	318	310.2	796.2
7	317	336	210	375	323	312.3	771.9
8	315	334	213	388	328	315.5	744.2
9	313	332	213	391	333	316.2	720.2
10	310	330	213	394	338	316.9	708.9
11	308	328	213	398	342	317.6	702.2
12	305	325	212	401	346	317.9	701.3
13	303	324	212	402	349	318.2	701.0
14	301	323	213	403	353	318.4	700.2
15	299	321	213	403	355	318.4	702.3
16	298	319	212	406	358	318.5	707.0
17	296	318	212	407	360	318.7	709.0
18	294	316	212	405	362	317.8	715.2
19	293	315	212	410	364	318.4	718.9
20	291	313	213	414	366	319.3	724.5
21	289	312	210	417	367	319.0	730.3
22	288	310	212	415	368	318.6	732.1
23	286	309	210	419	369	318.8	733.5
24	285	308	210	423	371	319.2	733.9
25	283	307	211	423	372	319.1	736.8
26	282	305	210	425	372	319.0	714.3
27	281	304	211	429	373	319.7	715.4
28	280	303	210	429	374	319.0	714.2
29	279	302	209	429	374	318.7	713.7
30	277	301	207	440	373	319.5	697.4
31	276	300	205	442	367	317.8	702.8
32	275	299	202	446	358	315.9	706.1
33	274	298	201	452	349	314.7	717.6
34	273	297	203	453	339	313.1	718.8
35	272	296	200	457	330	311.0	727.3
36	271	295	198	463	322	309.8	731.7
37	270	295	196	465	314	308.1	730.9
38	269	294	195	471	307	307.3	729.2
39	268	293	195	472	301	305.8	745.1
40	267	292	193	478	295	305.1	744.6
41	267	292	191	478	290	303.5	745.2
42	266	291	190	483	285	303.0	744.5
43	265	290	189	485	281	302.0	749.4
44	264	290	186	488	277	301.1	757.6
45	264	289	186	487	274	300.1	758.1
46	263	289	185	488	271	299.1	760.5
47	263	288	184	494	268	299.2	770.5

WOODSTOVE SURFACE TEMPERATURE DATA

Client: FPI
Model: I3000
Run #: 1

Job #: 23-229
Tracking #: 169
Technician: AK
Date: 11/27/2023

Stove ΔT: 75

	Temperature Data (°F)						
Elapsed Time (min)	FB Left	FB Right	FB Back	FB Top	FB Bottom	Stove Surface Average	Catalyst Exit
48	263	288	183	491	265	298.0	774.0
49	262	287	182	495	263	297.8	767.6
50	262	287	180	498	261	297.6	771.6
51	261	287	181	499	259	297.3	764.1
52	261	287	179	502	257	297.2	765.3
53	261	286	179	504	256	297.2	756.2
54	261	286	179	504	254	297.0	769.1
55	261	286	178	508	253	297.2	771.8
56	261	286	178	511	252	297.3	772.2
57	261	286	177	509	250	296.6	764.0
58	261	286	177	511	249	296.8	769.9
59	261	287	178	511	248	296.8	777.3
60	261	287	176	510	247	296.1	768.9
61	261	287	176	509	246	295.9	766.3
62	261	288	176	509	245	295.7	761.4
63	261	289	175	508	244	295.4	759.2
64	261	289	176	508	243	295.4	753.9
65	261	290	175	506	242	294.9	751.3
66	261	291	176	503	241	294.4	748.9
67	262	291	175	503	240	294.2	754.1
68	261	292	175	501	239	293.8	764.0
69	262	292	175	503	239	294.0	756.1
70	262	293	175	501	238	293.6	751.9
71	262	294	174	504	237	294.2	744.7
72	262	294	173	503	236	293.6	738.9
73	262	295	173	504	235	293.9	731.8
74	262	295	174	503	234	293.6	731.6
75	262	296	173	502	233	293.2	737.1
76	262	297	173	500	232	292.7	740.3
77	262	298	173	499	231	292.5	738.5
78	262	299	173	497	231	292.4	735.2
79	263	300	173	496	230	292.0	727.0
80	263	301	173	493	229	291.5	725.7
81	263	302	173	493	228	291.5	731.6
82	263	303	172	490	227	291.1	730.5
83	263	304	172	491	226	291.1	730.3
84	263	305	171	488	225	290.4	733.0
85	263	305	172	486	224	290.1	740.1
86	263	306	171	487	224	290.2	738.0
87	263	307	171	485	223	289.8	740.4
88	264	307	171	485	222	289.6	746.6
89	264	307	171	485	221	289.4	746.5
90	264	307	170	485	221	289.6	757.3
91	264	308	171	484	220	289.5	752.1
92	265	308	170	485	220	289.4	752.0
93	265	308	170	487	219	290.0	759.7
94	266	308	170	487	219	289.9	762.5
95	266	309	170	486	218	289.8	761.1

WOODSTOVE SURFACE TEMPERATURE DATA

Client: FPI
Model: I3000
Run #: 1

Job #: 23-229
Tracking #: 169
Technician: AK
Date: 11/27/2023

Stove ΔT: 75

	Temperature Data (°F)						
Elapsed Time (min)	FB Left	FB Right	FB Back	FB Top	FB Bottom	Stove Surface Average	Catalyst Exit
96	267	309	170	488	218	290.3	758.8
97	268	309	170	489	217	290.4	756.9
98	268	309	169	489	217	290.5	759.4
99	269	310	171	489	216	290.9	763.2
100	269	310	170	489	216	290.7	755.3
101	270	310	170	488	216	290.7	756.1
102	270	311	170	491	215	291.2	759.0
103	271	311	170	491	215	291.5	757.7
104	271	311	170	490	215	291.5	756.5
105	272	312	170	491	215	291.7	761.9
106	272	312	171	490	214	291.9	756.3
107	273	313	172	489	214	292.1	755.4
108	274	313	171	492	214	292.7	756.0
109	274	313	170	491	214	292.5	756.9
110	274	314	171	489	214	292.3	758.1
111	275	315	171	488	213	292.2	753.3
112	275	315	172	487	213	292.4	758.1
113	276	315	172	488	213	292.8	763.1
114	276	316	172	489	213	293.2	760.7
115	276	316	173	487	213	292.9	764.1
116	277	317	174	489	213	293.8	765.0
117	278	317	174	487	212	293.6	764.9
118	278	318	174	487	212	293.7	770.1
119	278	318	174	490	212	294.4	767.4
120	279	319	175	489	212	294.5	771.1
121	279	319	174	492	211	295.0	770.5
122	279	320	175	491	211	295.2	770.3
123	280	320	174	489	211	294.9	771.6
124	280	321	176	489	211	295.3	770.0
125	281	321	175	489	211	295.4	769.0
126	281	321	175	488	211	295.3	764.9
127	282	321	176	485	211	295.0	763.5
128	282	322	177	483	211	294.8	758.6
129	283	322	177	483	211	295.1	759.7
130	283	322	179	481	211	295.0	757.1
131	283	322	178	479	211	294.6	755.8
132	284	323	179	475	211	294.1	753.2
133	284	323	179	474	211	294.0	755.1
134	285	323	180	472	211	294.1	755.2
135	285	323	179	468	211	293.3	753.6
136	286	323	178	468	211	293.1	756.9
137	286	324	179	466	211	293.0	757.5
138	286	324	181	466	211	293.4	758.9
139	287	324	180	463	211	292.8	759.9
140	287	324	180	464	211	293.3	761.9
141	287	324	181	461	211	292.9	762.3
142	288	324	182	461	211	293.1	763.8
143	288	325	182	461	211	293.3	763.6

WOODSTOVE SURFACE TEMPERATURE DATA

Client: FPI
Model: I3000
Run #: 1

Job #: 23-229
Tracking #: 169
Technician: AK
Date: 11/27/2023

Stove ΔT: 75

	Temperature Data (°F)						
Elapsed Time (min)	FB Left	FB Right	FB Back	FB Top	FB Bottom	Stove Surface Average	Catalyst Exit
144	289	325	183	460	211	293.4	762.0
145	289	325	183	460	210	293.4	761.3
146	289	326	183	459	210	293.6	754.8
147	290	326	184	458	210	293.7	747.6
148	290	326	184	458	210	293.8	740.8
149	290	327	185	456	210	293.5	737.1
150	291	327	186	456	211	293.8	730.5
151	291	327	186	453	211	293.3	726.2
152	291	327	186	451	211	293.2	724.5
153	292	327	186	448	211	292.7	718.0
154	292	327	187	447	211	292.7	713.0
155	292	327	187	444	210	292.2	711.0
156	293	327	187	440	210	291.4	707.4
157	293	328	188	437	210	291.1	703.5
158	293	328	188	435	210	290.8	700.8
159	293	328	189	434	210	290.6	697.1
160	294	328	190	432	209	290.4	695.7
161	294	327	189	429	209	289.6	694.8
162	294	328	189	427	209	289.2	692.9
163	294	327	189	426	208	288.9	690.3
164	294	327	190	424	208	288.6	685.7
165	294	327	190	421	208	287.9	679.5
166	295	327	191	420	207	287.8	674.8
167	295	327	190	417	207	287.0	669.7
168	295	327	190	416	206	286.7	666.5
169	295	326	190	412	206	285.8	662.5
170	295	326	190	410	205	285.4	658.6
171	295	326	191	409	205	285.0	654.0
172	296	325	191	407	204	284.6	650.1
173	296	325	191	404	204	283.9	647.4
174	296	325	191	401	204	283.1	641.7
175	296	324	191	399	203	282.7	638.4
176	296	324	190	397	203	281.9	634.7
177	296	324	191	396	203	281.7	629.7
178	296	323	191	392	202	280.8	626.7
179	296	323	190	390	202	280.0	624.6
180	296	322	190	388	202	279.5	622.1
181	295	322	190	385	202	278.7	620.6
182	295	322	189	383	201	278.1	618.0
183	295	321	189	380	201	277.4	613.3
184	295	321	190	380	201	277.3	611.7
185	295	321	189	377	201	276.4	608.9
186	294	320	190	375	201	275.9	603.4
187	294	320	190	373	200	275.4	600.1
188	294	320	189	372	200	274.8	597.1
189	293	319	189	369	200	273.9	596.0
190	293	319	189	367	200	273.6	592.9
191	293	319	189	365	200	273.1	589.3

WOODSTOVE SURFACE TEMPERATURE DATA

Client: FPI
Model: I3000
Run #: 1

Job #: 23-229
Tracking #: 169
Technician: AK
Date: 11/27/2023

Stove ΔT: 75

	Temperature Data (°F)						
Elapsed Time (min)	FB Left	FB Right	FB Back	FB Top	FB Bottom	Stove Surface Average	Catalyst Exit
192	293	319	189	363	199	272.5	585.6
193	293	319	189	363	199	272.5	585.3
194	292	319	189	359	199	271.5	581.9
195	292	318	189	359	199	271.2	578.3
196	291	318	189	357	199	270.8	578.9
197	291	318	189	354	198	270.1	576.5
198	291	318	188	355	198	269.8	575.0
199	290	317	189	352	198	269.3	571.3
200	290	318	188	352	198	269.0	569.8
201	290	317	189	350	198	268.8	568.9
202	289	317	189	349	198	268.4	566.6
203	289	317	189	348	197	268.0	566.8
204	289	316	189	347	197	267.5	565.9
205	288	316	189	345	197	267.1	563.6
206	288	316	189	344	197	266.8	565.1
207	288	316	189	344	197	266.7	561.6
208	287	316	189	343	197	266.3	560.7
209	287	315	189	343	197	266.2	561.3
210	287	315	189	342	197	265.8	560.9
211	287	315	189	340	197	265.5	558.4
212	286	314	188	340	197	265.1	558.2
213	286	314	189	340	197	265.1	557.2
214	286	313	188	339	197	264.5	555.2
215	286	313	188	338	197	264.2	552.9
216	286	313	189	338	197	264.2	550.8
217	285	312	189	336	196	263.6	549.5
218	285	312	188	336	196	263.4	549.4
219	285	311	188	335	196	263.0	547.5
220	285	311	188	334	196	262.5	544.6
221	285	310	188	334	196	262.5	545.7
222	285	310	187	334	196	262.2	545.3
223	285	309	187	333	195	261.8	544.1
224	285	309	188	331	195	261.5	542.3
225	284	308	188	332	195	261.6	540.0
226	284	308	188	330	195	261.0	539.3
227	284	307	188	330	195	260.7	537.3
228	284	307	188	329	195	260.3	538.9
229	284	306	188	328	195	260.0	536.3
230	284	305	187	327	195	259.7	534.6
231	284	305	187	327	195	259.6	533.4
232	284	304	187	327	195	259.6	534.0
233	284	304	187	326	195	259.1	531.8
234	284	303	186	325	195	258.7	531.7
235	284	303	187	325	195	258.9	530.9
236	284	302	186	324	196	258.3	530.0
237	284	302	186	323	196	258.1	529.7
238	284	301	186	323	196	258.0	529.2
239	284	301	186	322	196	257.7	527.3

WOODSTOVE SURFACE TEMPERATURE DATA

Client: FPI
Model: I3000
Run #: 1

Job #: 23-229
Tracking #: 169
Technician: AK
Date: 11/27/2023

Stove ΔT: 75

	Temperature Data (°F)						
Elapsed Time (min)	FB Left	FB Right	FB Back	FB Top	FB Bottom	Stove Surface Average	Catalyst Exit
240	283	300	186	322	196	257.4	524.9
241	283	300	185	322	196	257.3	524.8
242	283	299	185	321	197	257.0	525.0
243	283	299	185	322	197	257.1	524.6
244	283	299	186	320	197	256.7	522.2
245	282	298	185	320	197	256.5	522.1
246	282	298	183	320	197	256.1	519.9
247	282	297	184	319	197	255.8	518.6
248	282	297	184	318	197	255.4	517.9
249	282	296	184	319	197	255.5	517.3
250	281	296	184	318	197	255.3	519.6
251	280	296	182	317	197	254.4	518.1
252	281	295	182	317	197	254.6	516.8
253	280	295	183	316	198	254.2	513.2
254	280	295	183	318	197	254.4	514.7
255	280	294	182	316	197	253.8	516.9
256	280	294	182	317	198	254.0	517.3
257	279	294	182	315	198	253.4	517.1
258	279	293	181	314	197	252.8	514.7
259	278	293	182	316	197	253.3	515.7
260	278	293	181	315	197	252.8	513.1
261	278	292	181	314	197	252.4	515.4
262	277	292	180	313	197	251.9	512.8
263	277	292	180	314	197	251.8	513.0
264	277	291	180	313	197	251.5	513.3
265	277	291	181	312	197	251.4	512.2
266	276	291	180	312	196	251.0	509.5
267	276	291	179	312	196	250.6	508.5
268	276	290	179	311	196	250.4	506.7
269	275	290	180	313	196	250.8	506.0
270	275	290	179	312	196	250.2	504.7
271	275	289	178	310	196	249.6	502.5
272	274	289	178	309	196	249.2	501.7
273	274	289	178	309	196	249.1	500.7
274	273	288	178	309	196	248.8	502.5
275	273	288	177	309	196	248.6	498.6
276	273	288	178	310	196	248.8	498.8
277	272	288	177	309	196	248.2	499.7
278	272	287	177	307	196	247.9	498.6
279	272	287	177	306	196	247.5	496.9
280	271	287	176	306	197	247.3	495.5
281	271	287	177	308	197	247.7	496.6
282	270	287	176	306	197	247.0	494.0
283	270	286	176	305	197	246.9	494.4
284	270	286	175	304	197	246.2	492.4
285	269	286	175	305	197	246.5	491.3
286	269	286	175	303	197	246.0	491.3
287	268	285	175	304	197	245.9	491.0

WOODSTOVE SURFACE TEMPERATURE DATA

Client: FPI
Model: I3000
Run #: 1

Job #: 23-229
Tracking #: 169
Technician: AK
Date: 11/27/2023

Stove ΔT: 75

	Temperature Data (°F)						
Elapsed Time (min)	FB Left	FB Right	FB Back	FB Top	FB Bottom	Stove Surface Average	Catalyst Exit
288	267	285	174	302	198	245.3	488.9
289	267	285	174	304	198	245.5	488.1
290	267	285	174	302	198	245.1	488.9
291	266	285	173	301	198	244.7	487.2
292	266	285	174	300	198	244.5	485.7
293	265	285	173	302	198	244.7	486.4
294	265	284	173	300	198	244.2	483.9
295	264	284	173	300	198	244.0	484.7
296	264	284	173	299	199	243.7	483.1
297	264	284	172	298	199	243.2	482.3
298	263	284	172	300	199	243.5	482.9
299	263	284	172	298	199	242.9	480.4
300	262	284	172	299	199	243.0	480.5
301	262	283	171	298	199	242.6	481.7
302	262	283	172	298	199	242.6	482.1
303	261	283	171	297	199	242.3	481.0
304	261	283	170	297	199	241.9	480.1
305	260	283	171	296	199	241.7	480.8
306	260	282	170	297	199	241.7	479.7
307	259	282	171	298	199	241.8	480.3
308	259	282	171	298	199	241.7	480.1
309	259	282	170	297	199	241.4	481.4
310	259	281	170	296	199	240.9	480.1
311	258	281	170	296	200	240.9	480.0
312	258	281	170	296	200	240.8	480.8
313	257	281	170	298	200	241.0	478.2
314	257	280	169	296	200	240.4	477.4
315	257	280	169	296	199	240.3	478.2
316	257	280	169	296	199	240.2	478.3
317	256	279	169	296	199	240.1	478.5
318	256	279	169	295	199	239.7	479.0
319	256	279	169	295	199	239.5	477.6
320	256	279	169	296	199	239.6	476.9
321	255	278	168	296	199	239.4	476.1
322	255	278	169	296	199	239.4	476.4
323	255	278	168	296	199	239.0	476.4
324	255	278	168	297	199	239.1	477.2
325	254	277	168	295	198	238.7	476.3
326	254	277	168	296	198	238.7	473.9
327	254	276	169	296	198	238.6	472.8
328	254	276	168	294	198	238.1	472.8
329	254	276	169	294	198	237.9	471.6
330	254	275	168	293	198	237.5	471.4
331	254	275	169	291	198	237.3	471.0
332	254	274	168	291	198	236.8	469.5
333	254	274	168	290	198	236.7	469.2
334	254	273	168	290	198	236.7	468.7
335	254	273	168	290	198	236.3	467.3

WOODSTOVE SURFACE TEMPERATURE DATA

Client: FPI
Model: I3000
Run #: 1

Job #: 23-229
Tracking #: 169
Technician: AK
Date: 11/27/2023

Stove ΔT: 75

	Temperature Data (°F)						
Elapsed Time (min)	FB Left	FB Right	FB Back	FB Top	FB Bottom	Stove Surface Average	Catalyst Exit
336	254	272	168	290	198	236.4	467.2
337	254	271	168	289	198	236.0	465.7
338	254	271	168	288	198	235.7	466.5
339	254	270	168	287	198	235.5	467.2
340	254	270	168	287	199	235.5	468.3
341	254	269	168	287	199	235.4	466.9
342	254	269	168	287	199	235.4	465.7
343	254	268	168	287	199	235.2	467.0
344	254	268	168	286	199	235.1	465.4
345	255	267	169	286	199	235.2	465.0
346	255	267	168	286	199	235.1	464.1
347	255	266	168	285	200	234.7	463.8
348	255	266	168	286	200	234.8	463.3
349	255	265	168	286	200	234.9	464.1
350	255	265	168	285	200	234.5	463.7
351	256	265	169	285	200	234.7	463.5
352	255	264	168	285	200	234.3	463.4
353	256	264	168	284	200	234.3	463.1
354	255	263	169	286	200	234.5	462.2
355	256	263	169	284	199	234.1	462.6
356	256	262	168	284	199	234.0	463.6
357	256	262	168	284	199	233.9	464.8
358	256	262	168	284	199	233.7	465.4
359	256	261	168	284	199	233.7	463.8
360	256	261	168	283	199	233.1	463.4
361	256	260	168	283	199	233.1	463.1
362	256	260	169	284	199	233.3	463.1
363	256	260	169	283	199	233.0	463.8
364	256	259	168	282	198	232.8	462.5
365	256	259	169	283	198	232.8	462.5
366	256	259	168	282	198	232.6	462.1
367	256	258	168	282	198	232.4	463.6
368	256	258	168	282	198	232.3	463.3
369	255	258	168	282	198	232.1	462.5
370	255	257	168	282	198	232.1	461.5
371	255	257	169	283	198	232.3	461.6
372	255	257	168	282	197	231.8	458.8
373	255	257	168	282	197	231.7	459.7
374	255	257	168	282	197	231.5	459.9
375	255	256	168	281	197	231.3	460.8
376	255	256	168	281	197	231.2	458.9
377	255	256	167	281	196	230.8	460.0
378	254	255	168	283	196	231.2	458.8
379	254	255	167	281	196	230.6	458.6
380	254	255	168	281	196	230.7	460.4
381	254	255	168	282	196	230.7	459.8
382	254	254	167	281	195	230.2	461.9
383	254	254	167	283	195	230.4	461.2

WOODSTOVE SURFACE TEMPERATURE DATA

Client: FPI
Model: I3000
Run #: 1

Job #: 23-229
Tracking #: 169
Technician: AK
Date: 11/27/2023

Stove ΔT: 75

	Temperature Data (°F)						
Elapsed Time (min)	FB Left	FB Right	FB Back	FB Top	FB Bottom	Stove Surface Average	Catalyst Exit
384	253	253	167	282	195	230.1	462.6
385	254	253	167	282	195	230.0	461.3
386	254	253	166	281	195	229.7	459.6
387	253	252	167	284	194	230.2	461.9
388	253	252	166	281	194	229.2	460.4
389	253	251	166	282	194	229.2	460.7
390	253	251	166	282	193	228.9	460.5
391	253	251	166	282	193	229.0	461.8
392	253	250	166	282	192	228.7	464.5
393	253	250	166	282	192	228.6	464.1
394	253	249	166	283	192	228.5	462.8
395	253	249	165	283	191	228.2	460.7
396	253	249	166	283	191	228.3	460.5
397	253	248	165	283	191	227.8	459.0
398	253	248	164	283	190	227.5	458.3
399	253	247	165	282	190	227.4	457.7
400	253	247	165	282	190	227.3	456.1
401	253	247	164	282	189	227.0	455.6
Average	274.1	297.2	180.4	376.9	220.9	269.9	606.0

LAB SAMPLE DATA - ASTM E2515

Client: FPI
Model: I3000
Run #: 1

Job #: 23-229
Tracking #: 169
Technician: AK
Date: 11/27/2023

		Sample ID	Tare, mg	Final, mg	Catch, mg
Filters	**A**	G00753	250.9	255.6	4.7
	B	G00754	250.8	255.4	4.6
	C - 1st Hour	G00755	250.5	253.1	2.6
	Amb	G00756	251.1	251.1	0.0
Probes	**A**	1A	115627.4	115628.1	0.7
	B	1B	115902.6	115903.0	0.4
	C - 1st Hour	1C	116433.3	116433.7	0.4
O-rings	**A**	1A	3569.2	3569.2	0.0
	B	1B	3557.5	3557.6	0.1
	C - 1st Hour	1C	4167.9	4168.2	0.3

Placed in Dessicator on:	11/28/2023

		Balance Audit (mg):	200.0		200.0		200.0			
			Weight (mg)	Date/Time	Weight (mg)	Date/Time	Weight (mg)	Date/Time	Weight (mg)	Date/Time
Filters	**A**		255.1	12/1 14:00	255.8	12/4 10:00	255.6	12/6 15:00		
	B		254.7	12/1 14:00	255.2	12/4 10:00	255.4	12/6 15:00		
	C - 1st Hour		252.7	12/1 14:00	253.3	12/4 10:00	253.1	12/6 15:00		
	Amb		251.1	12/1 14:00	251.1	12/4 10:00				
Probes	**A**		115627.9	12/1 14:00	115628.1	12/4 10:00				
	B		115902.9	12/1 14:00	115903.0	12/4 10:00				
	C - 1st Hour		116433.6	12/1 14:00	116433.7	12/4 10:00				
O-Rings	**A**		3569.2	12/1 14:00	3569.2	12/4 10:00				
	B		3557.6	12/1 14:00	3557.6	12/4 10:00				
	C - 1st Hour		4167.9	12/1 14:00	4168.2	12/4 10:00				

Train A Aggregate, mg:	**5.4**
Train B Aggregate, mg:	**5.1**
Train C Aggregate, mg:	**3.3**
Ambient, mg:	**0.0**

ASTM E2780 Wood Heater Run Sheets

Client: FPI Job Number: 23-229 Tracking #: 169
Model: I3000 Run Number: 1 Test Date: 11/27/23

Wood Heater Run Notes

Test Control Settings

Primary Air Setting(s): Fully Closed
Targeted Burn Category: I

Preburn Notes

Time	Notes
	-None-

Test Notes

Test Burn Start Time: 14:18 Test Fuel Loaded by: 30 seconds
Door Closed: 45 seconds Air Control Set at: 300 seconds
Other Loading Notes: Bypass open while door open, fan set to low @ 30 min

Time	Notes
	-None-

Test Burn End Time: 20:59

Flue Gas Concentration Measurement

Calibration Gas Values: Span Gas CO_2 (%): 16.93 CO (%): 4.33
Mid Gas CO_2 (%): 10.00 CO (%): 2.51

Calibration Results:

	Pre Test			Post Test		
	Zero	Span	Mid	Zero	Span	Mid
Time	10:22	10:23	10:24	11/28 6:24	11/28 6:25	11/28 6:28
CO_2	0.00	17.01	10.24	-0.06	16.98	9.98
CO	0.000	4.306	2.550	0.030	4.300	2.527

Flue Gas Probe Leak Check: Initial: No Leakage Final: No Leakage

Technician Signature: Date: 11/28/23

ASTM E2780 Wood Heater Run Sheets

Client: FPI Job Number: 23-229 Tracking #: 169
Model: I3000 Run Number: 1 Test Date: 11/27/23

Test Fuel Front/Side View

Test Fuel Iso View

Test Fuel Loaded in Stove

Air Setting

Technician Signature: Date: 11/28/23

WOOD STOVE TEST DATA PACKET
ASTM E2780/E2515

Run 2 Data Summary

Client:	FPI
Model:	I3000
Job #:	23-229
Tracking #:	169
Test Date:	11/28/2023

1/29/2024

Techician Signature Date

TEST RESULTS - ASTM E2780 / ASTM E2515

Client: FPI
Model: I3000
Run #: 2

Job #: 23-229
Tracking #: 169
Technician: AK
Date: 11/28/2023

Burn Rate (kg/hr):	2.41

	Ambient Sample	Sample Train A	Sample Train B	1st Hour Filter
Total Sample Volume (ft^3)	17.162	27.538	27.499	8.808
Average Gas Velocity in Dilution Tunnel (ft/sec)	7.5			
Average Gas Flow Rate in Dilution Tunnel (dscf/hr)	19695.1			
Average Gas Meter Temperature (°F)	68.3	87.9	87.8	76.2
Total Sample Volume (dscf)	17.220	26.850	26.820	8.798
Average Tunnel Temperature (°F)	98.5			
Total Time of Test (min)	165			
Total Particulate Catch (mg)	0.2	1.6	1.8	1.0
Particulate Concentration, dry-standard (g/dscf)	0.0000116	0.0000596	0.0000671	0.0001137
Total PM Emissions (g)	0.63	2.60	3.01	2.01
Particulate Emission Rate (g/hr)	0.23	0.94	1.09	2.01
Emissions Factor (g/kg)	-	0.39	0.45	-
Difference from Average Total Particulate Emissions (g)	-	0.20	0.20	-
Difference from Average Total Particulate Emissions (%)	-	7.3%	7.3%	
Difference from Average Emissions Factor (g/kg)	-	0.03	0.03	-

Final Average Results	
Total Particulate Emissions (g)	2.80
Particulate Emission Rate (g/hr)	1.02
Emissions Factor (g/kg)	0.42
HHV Efficiency (%)	74.6%
LHV Efficiency (%)	80.6%
CO Emissions (g/min)	0.91

Quality Checks	Requirement	Observed	Result
Dual Train Precision	Each train within 7.5% of average emissions (in grams), or emission factors within 0.5 g/kg	See Above	OK
Filter Temps	<90 °F	79.6	OK
Face Velocity	< 30 ft/min	9.3	OK
Leakage Rate	Less than 4% of average sample rate	0.001 cfm	OK
Ambient Temp	55-90 °F	Min:67.4/Max:69.3	OK
Negative Probe Weight Evaluation	<5% of Total Catch	Probe Catch Not Negative	OK
Pro-Rate Variation	90% of readings between 90-110%; none greater than 120% or less than 80%	See Data Tabs	OK
Stove Surface ΔT	<126°F	33.5	OK

B415.1 Efficiency Results

Manufacturer:	FPI
Model:	I3000
Date:	11/28/23
Run:	2
Control #:	23-229
Test Duration:	165
Output Category:	4

Test Results in Accordance with CSA B415.1-09

	HHV Basis	LHV Basis
Overall Efficiency	74.6%	80.6%
Combustion Efficiency	98.5%	98.5%
Heat Transfer Efficiency	75.7%	81.8%

Output Rate (kJ/h)	35,273	33,460	**(Btu/h)**
Burn Rate (kg/h)	2.39	5.26	**(lb/h)**
Input (kJ/h)	47,299	44,868	**(Btu/h)**

Test Load Weight (dry kg)	6.57	14.47	**dry lb**
MC wet (%)	18.56		
MC dry (%)	22.79		
Particulate (g)	2.80		
CO (g)	150		
Test Duration (h)	2.75		

Emissions	Particulate	CO
g/MJ Output	0.03	1.55
g/kg Dry Fuel	0.43	22.91
g/h	1.02	54.69
g/min	0.02	0.91
lb/MM Btu Output	0.07	3.60

Air/Fuel Ratio (A/F)	11.47

VERSION: **2.4** **4/15/2010**

WOODSTOVE FUEL DATA - ASTM E2780

Client: FPI
Model: I3000
Run #: 2

Job #: 23-229
Tracking #: 169
Technician: AK
Date: 11/28/2023

Preburn Fuel Information

Size	Length (in)	Moisture Content (% DB)	Size	Length (in)	Moisture Content (% DB)
2x4	17.00	24.1	2x4	20.00	21.4
2x4	17.00	23.8			
2x4	17.00	21.5			
2x4	17.00	19.1			
2x4	17.00	20.8			
2x4	17.00	21.6			
2x4	20.00	19.9			
2x4	20.00	19.2			
Total Fuel Weight (lbs):		19.14	Average Moisture (%DB):		21.3

Firebox Volume (ft^3):	2.75
Total 2x4 Crib Weight, with spacers (lbs):	9.33
Total 4x4 Crib Weight, with spacers (lbs):	8.51
Total Wet Fuel Weight, with spacers (lbs):	17.84

Coal Bed Range (20-25%):
Min (lbs): 3.57
Max (lbs): 4.46

Test Fuel Information

Size	Length (in)	Weight (lbs)	Moisture Content (%DB)			Dry Weight (lbs)
2x4	20.00	1.96	23.3	23.2	23.3	1.59
2x4	20.00	2.14	22.3	22.6	23.5	1.74
2x4	18.50	1.96	23.4	23.8	24.1	1.58
4x4	18.50	4.43	22.1	22.3	22.4	3.62
2x4	17.00	1.85	22.5	23.5	21.5	1.51
4x4	17.00	3.73	23.2	23.0	20.3	3.05
					Total Dry Weight, no spacers (lbs):	13.10
					Total Dry Weight, with spacers (lbs):	14.61

Spacer Moisture Readings (%DB)

15.6	18.8	16.4					
19.5	18.5	15.4					
18.4	19.3						
17.2	15.4						
17.6	15.5						
18.0	15.5						
14.9	19.4						
18.2	15.7						

Quality Checks	Requirement	Observed	Result
Fuel Density	25 - 36 (lbs/ft^3, DB)	27.2	OK
Loading Density	6.3 - 7.7 (lbs/ft^3, WB)	6.49	OK
2x4 Fuel Mix	35 - 65 % of total weight	52%	OK

DILUTION TUNNEL & MISC. DATA - ASTM E2780 / E2515

Client:	FPI	Job #:	23-229
Model:	I3000	Tracking #:	169
Run #:	2	Technician:	AK
Test Start Time:	13:43	Date:	11/28/2023

Total Sampling Time (min):	165	
Recording Interval (min):	1	
Meter Box γ Factor:	1.004	(A)
Meter Box γ Factor:	1.004	(B)
Meter Box γ Factor:	1.011	(C)
Meter Box γ Factor:	1.003	(Ambient)
Induced Draft Check (in. H_2O):	0	
Smoke Capture Check (%):	100%	
Date Flue Pipe Last Cleaned:	11/13/2023	
Test Fuel Scale Audit (lbs)	10.00	
Platform Scale Audit (lbs)	10.0	

	Pre-Test	Post Test	Avg.
Barometric Pressure (in. Hg)	29.93	29.99	29.96
Relative Humidity (%)	24.8	41.7	
Room Air Velocity (ft/min)	<50	<50	
Pitot Tube Leak Check	0	0	
Ambient Sample Volume:		17.162	ft^3

Sample Train Leak Checks

	Pre-test	Post-test			
(A)	0.000	0.000	cfm @	-6	in. Hg
(B)	0.000	0.001	cfm @	-6	in. Hg
(C)	0.000	0.000	cfm @	-5	in. Hg
(Ambient)	0.000	0.000	cfm @	-11	in. Hg

DILUTION TUNNEL FLOW

Traverse Data

Point	dP (in H_2O)	Temp (°F)
1	0.010	99
2	0.012	99
3	0.014	99
4	0.016	99
5	0.014	99
6	0.010	99
7	0.008	99
8	0.008	99
9	0.012	99
10	0.018	99
11	0.016	99
12	0.010	99
Center	0.016	99

Static Pressure: -0.110 in. H_2O

Dilution Tunnel H_2O:	2.00	percent
Tunnel Diameter:	12	inches
Pitot Tube Cp:	0.99	[unitless]
Dilution Tunnel MW(dry):	29.00	lb/lb-mole
Dilution Tunnel MW(wet):	28.78	lb/lb-mole
Tunnel Area:	0.7854	ft^2
V_{strav}:	7.51	ft/sec
V_{scent}:	8.63	ft/sec
F_p:	0.871	[ratio]
Initial Tunnel Flow:	327.8	scf/min

TEST FUEL PROPERTIES

Fuel Load Configuration

Firebox Front

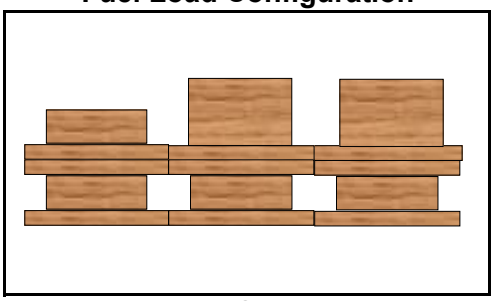

Firebox Back

Firebox Side View

Actual Fuel Used Properties

Fuel Type:	D. Fir
HHV (kJ/kg)	19,810
%C	48.73
%H	6.87
%O	43.9
%Ash	0.5
MC (%DB)	22.8

WOODSTOVE PREBURN DATA - ASTM E2780

Client: FPI
Model: I3000
Run #: 2

Job #: 23-229
Tracking #: 169
Technician: AK
Date: 11/28/2023

Recording Interval (min): 1
Run Time (min): 125

			Temperatures (°F)							
Elapsed Time (min)	Scale Reading (lbs)	Flue Draft (in H_2O)	FB Left	FB Right	FB Back	FB Top	FB Bottom	Stove Surface Average	Flue	Ambient
0	21.65	-0.084	396	450	249	703	367	433.0	514	67
1	21.54	-0.083	397	451	249	695	366	431.5	461	67
2	21.42	-0.082	398	450	249	681	362	428.0	455	67
3	21.30	-0.084	398	450	249	669	357	424.6	457	67
4	21.15	-0.082	398	448	248	656	351	420.2	459	67
5	21.01	-0.083	397	446	248	647	345	416.3	458	67
6	20.88	-0.082	396	443	247	642	339	413.3	456	67
7	20.75	-0.083	394	440	245	633	334	409.1	458	67
8	20.61	-0.082	391	437	244	627	329	405.6	458	67
9	20.47	-0.082	389	433	242	623	324	402.3	456	67
10	20.33	-0.082	386	430	240	620	320	399.2	457	67
11	20.18	-0.083	384	426	239	613	316	395.6	459	67
12	20.03	-0.083	381	423	237	608	312	392.1	460	67
13	19.89	-0.082	378	419	236	605	309	389.3	457	67
14	19.75	-0.083	376	415	233	604	306	386.8	457	67
15	19.61	-0.083	374	412	231	599	303	383.9	457	67
16	19.46	-0.083	372	408	228	597	301	381.2	458	67
17	19.32	-0.083	370	405	226	593	299	378.6	458	67
18	19.18	-0.082	368	402	226	590	297	376.4	457	67
19	19.02	-0.083	366	398	223	586	295	373.7	457	67
20	18.85	-0.081	364	395	221	582	293	371.2	460	67
21	18.66	-0.082	362	392	221	583	292	369.9	461	67
22	18.47	-0.085	361	389	218	587	291	369.2	466	67
23	18.28	-0.086	358	387	217	594	289	369.1	470	67
24	18.08	-0.083	357	384	214	602	289	369.2	473	67
25	17.88	-0.085	355	382	213	608	288	369.0	474	67
26	17.68	-0.084	354	380	211	618	287	369.7	473	67
27	17.47	-0.085	353	378	210	624	286	369.9	473	67
28	17.25	-0.086	352	376	209	631	285	370.5	474	67
29	17.02	-0.085	350	374	207	632	284	369.5	477	67
30	16.79	-0.086	350	373	206	640	283	370.5	479	67
31	16.55	-0.086	349	371	206	645	283	370.7	480	67
32	16.32	-0.085	349	370	204	647	282	370.3	481	67
33	16.08	-0.086	348	369	204	650	282	370.5	481	67
34	15.84	-0.086	348	368	202	653	281	370.5	482	67
35	15.59	-0.087	348	368	201	657	281	370.9	483	67
36	15.33	-0.085	348	368	200	661	280	371.3	483	67
37	15.08	-0.086	348	368	199	664	280	371.8	484	68
38	14.82	-0.088	347	369	199	664	280	371.6	486	67
39	14.55	-0.087	347	369	197	670	279	372.5	488	67
40	14.27	-0.086	347	370	198	672	279	373.1	488	67
41	14.02	-0.086	347	371	196	669	279	372.4	484	67
42	13.80	-0.085	347	373	196	666	278	372.0	480	67
43	13.59	-0.085	347	374	196	663	278	371.7	475	68
44	13.40	-0.085	347	376	197	661	278	371.7	472	68

WOODSTOVE PREBURN DATA - ASTM E2780

Client: FPI
Model: I3000
Run #: 2

Job #: 23-229
Tracking #: 169
Technician: AK
Date: 11/28/2023

Recording Interval (min): 1
Run Time (min): 125

			Temperatures (°F)							
Elapsed Time (min)	Scale Reading (lbs)	Flue Draft (in H_2O)	FB Left	FB Right	FB Back	FB Top	FB Bottom	Stove Surface Average	Flue	Ambient
45	13.21	-0.084	347	378	195	656	278	370.9	467	68
46	13.02	-0.083	347	379	195	652	277	370.3	466	68
47	12.83	-0.084	348	381	195	650	277	370.1	466	68
48	12.64	-0.084	348	382	195	648	276	369.7	468	68
49	12.43	-0.084	348	384	195	648	275	369.9	471	68
50	12.22	-0.085	348	385	195	648	274	370.1	476	68
51	12.00	-0.086	347	386	194	652	274	370.7	479	68
52	11.77	-0.085	348	387	194	660	273	372.3	484	68
53	11.53	-0.086	348	388	195	663	272	373.1	489	68
54	11.27	-0.086	348	389	195	674	271	375.4	492	68
55	11.02	-0.086	348	390	194	679	270	376.2	495	68
56	10.75	-0.086	348	391	194	686	269	377.7	497	68
57	10.49	-0.088	350	393	194	695	268	380.0	498	68
58	10.24	-0.087	351	393	194	698	267	380.6	499	68
59	9.99	-0.085	352	395	195	705	267	382.6	496	68
60	9.74	-0.088	353	396	195	708	266	383.5	495	68
61	9.50	-0.087	354	397	194	709	265	383.6	493	68
62	9.27	-0.087	355	398	194	712	264	384.5	492	68
63	9.04	-0.085	357	399	195	716	263	386.0	491	68
64	8.83	-0.084	358	400	195	716	262	386.3	488	68
65	8.63	-0.086	360	401	195	720	261	387.4	487	68
66	8.43	-0.085	361	402	196	719	260	387.4	483	69
67	8.24	-0.084	362	403	196	716	260	387.2	483	69
68	8.06	-0.083	363	404	196	714	259	387.1	479	69
69	7.90	-0.083	364	405	197	705	258	386.0	477	69
70	7.75	-0.082	366	406	197	702	257	385.6	472	68
71	7.61	-0.081	367	407	197	700	256	385.5	471	69
72	7.49	-0.080	368	408	197	695	256	384.7	468	69
73	7.38	-0.081	369	409	198	690	255	384.2	464	68
74	7.28	-0.081	371	410	198	681	255	383.0	462	69
75	7.18	-0.079	373	410	200	675	254	382.3	457	68
76	7.08	-0.080	374	410	201	670	254	381.6	455	69
77	7.00	-0.078	375	411	200	668	253	381.3	451	69
78	6.91	-0.080	376	411	200	662	252	380.2	449	69
79	6.82	-0.078	378	410	201	658	252	379.7	448	68
80	6.75	-0.078	380	410	202	653	251	379.0	447	69
81	6.67	-0.078	380	410	203	648	250	378.2	447	69

BOX A TEST DATA - ASTM E2780 / ASTM E2515

Client: FPI
Model: I3000
Run #: 2

Job #: 23-229
Tracking #: 169
Technician: AK
Date: 11/28/2023

	Particulate Sampling Data							Fuel Weight (lb)		Temperature Data (°F)			
Elapsed Time (min)	Gas Meter (ft^3)	Sample Rate (cfm)	Dilution Tunnel dP (in H_2O)	Orifice dH (in H_2O)	Meter Temp (°F)	Meter Vacuum (in Hg)	Pro. Rate (%)	Scale Reading	Weight Change	Dilution Tunnel	Flue	Filter	Ambient
0	0.000		0.016	0.13	71	0.2		17.77		100	422	70	69
1	0.135	0.135	0.016	2.35	71	0.9	-	17.74	-0.03	106	419	73	69
2	0.290	0.155	0.016	2.38	71	0.9	-	17.58	-0.16	101	391	73	69
3	0.438	0.148	0.016	2.41	71	0.9	-	17.41	-0.17	100	406	73	69
4	0.595	0.157	0.016	2.43	71	0.9	-	17.22	-0.19	100	424	74	69
5	0.746	0.151	0.016	2.45	71	0.9	-	17.02	-0.20	101	438	74	69
6	0.904	0.158	0.016	2.46	72	0.9	-	16.80	-0.22	102	453	74	69
7	1.056	0.152	0.017	2.49	72	0.9	-	16.59	-0.21	102	459	75	69
8	1.212	0.156	0.016	2.49	72	1.0	-	16.38	-0.21	102	463	75	69
9	1.368	0.156	0.016	2.51	72	0.9	-	16.16	-0.22	103	470	76	69
10	1.524	0.156	0.016	2.54	72	0.9	94	15.93	-0.23	104	474	76	69
11	1.683	0.159	0.016	2.54	72	0.9	-	15.71	-0.22	104	478	76	69
12	1.836	0.153	0.016	2.55	72	1.0	-	15.48	-0.23	105	482	76	69
13	1.997	0.161	0.016	2.57	73	0.9	-	15.25	-0.23	105	484	77	69
14	2.153	0.156	0.016	2.59	73	0.9	-	15.03	-0.22	106	485	77	69
15	2.312	0.159	0.017	2.59	73	0.9	-	14.81	-0.22	105	485	77	69
16	2.471	0.159	0.016	2.60	73	1.0	-	14.59	-0.22	104	485	77	69
17	2.629	0.158	0.016	2.63	74	0.9	-	14.37	-0.22	104	486	78	69
18	2.790	0.161	0.016	2.62	74	0.9	-	14.16	-0.21	104	487	78	69
19	2.948	0.158	0.016	2.64	74	0.9	-	13.93	-0.23	104	486	78	69
20	3.109	0.161	0.016	2.65	75	1.0	98	13.72	-0.21	104	485	78	69
21	3.270	0.161	0.016	2.66	75	1.0	-	13.51	-0.21	104	486	78	69
22	3.429	0.159	0.016	2.67	75	0.9	-	13.28	-0.23	104	485	78	69
23	3.592	0.163	0.016	2.69	76	1.0	-	13.08	-0.20	104	485	79	69
24	3.752	0.160	0.016	2.69	76	1.0	-	12.86	-0.22	104	487	79	69
25	3.913	0.161	0.016	2.69	76	1.0	-	12.65	-0.21	104	487	79	69
26	4.078	0.165	0.016	2.71	77	1.0	-	12.42	-0.23	105	489	79	69
27	4.236	0.158	0.016	2.70	77	1.0	-	12.20	-0.22	105	487	79	69
28	4.402	0.166	0.016	2.72	77	1.0	-	11.97	-0.23	104	488	79	69
29	4.562	0.160	0.016	2.71	78	1.0	-	11.76	-0.21	104	487	79	69
30	4.725	0.163	0.016	2.72	78	1.0	100	11.55	-0.21	104	488	79	69
31	4.889	0.164	0.016	2.72	78	1.0	-	11.34	-0.21	104	488	79	69

BOX A TEST DATA - ASTM E2780 / ASTM E2515

Client: FPI
Model: I3000
Run #: 2

Job #: 23-229
Tracking #: 169
Technician: AK
Date: 11/28/2023

	Particulate Sampling Data							Fuel Weight (lb)		Temperature Data (°F)			
Elapsed Time (min)	Gas Meter (ft^3)	Sample Rate (cfm)	Dilution Tunnel dP (in H_2O)	Orifice dH (in H_2O)	Meter Temp (°F)	Meter Vacuum (in Hg)	Pro. Rate (%)	Scale Reading	Weight Change	Dilution Tunnel	Flue	Filter	Ambient
32	5.050	0.161	0.016	2.72	79	1.0	-	11.14	-0.20	104	488	79	69
33	5.213	0.163	0.016	2.72	79	1.0	-	10.93	-0.21	104	486	79	69
34	5.379	0.166	0.016	2.73	79	1.0	-	10.74	-0.19	104	487	79	69
35	5.539	0.160	0.016	2.74	79	1.0	-	10.55	-0.19	104	487	80	69
36	5.705	0.166	0.016	2.76	80	1.0	-	10.37	-0.18	104	484	80	69
37	5.869	0.164	0.016	2.75	80	1.0	-	10.21	-0.16	104	482	80	69
38	6.031	0.162	0.016	2.75	80	1.0	-	10.05	-0.16	103	478	80	69
39	6.199	0.168	0.016	2.76	81	1.0	-	9.90	-0.15	103	476	80	69
40	6.360	0.161	0.016	2.76	81	1.0	100	9.75	-0.15	103	476	80	69
41	6.525	0.165	0.016	2.78	81	1.0	-	9.60	-0.15	103	474	80	69
42	6.692	0.167	0.016	2.78	82	1.0	-	9.45	-0.15	103	473	80	69
43	6.854	0.162	0.016	2.77	82	1.0	-	9.31	-0.14	102	470	80	69
44	7.020	0.166	0.016	2.78	82	1.0	-	9.18	-0.13	102	468	80	69
45	7.186	0.166	0.016	2.77	83	1.0	-	9.04	-0.14	102	467	80	69
46	7.350	0.164	0.016	2.79	83	1.0	-	8.90	-0.14	102	467	80	69
47	7.516	0.166	0.016	2.79	83	1.0	-	8.76	-0.14	102	467	80	69
48	7.683	0.167	0.016	2.79	84	1.0	-	8.62	-0.14	102	466	80	69
49	7.846	0.163	0.016	2.80	84	1.0	-	8.48	-0.14	102	467	80	69
50	8.012	0.166	0.016	2.80	84	1.0	100	8.35	-0.13	101	466	80	69
51	8.180	0.168	0.016	2.80	84	1.0	-	8.22	-0.13	101	465	80	69
52	8.344	0.164	0.016	2.81	85	1.0	-	8.10	-0.12	101	464	80	69
53	8.511	0.167	0.016	2.80	85	1.0	-	7.97	-0.13	101	463	80	69
54	8.679	0.168	0.016	2.81	85	1.0	-	7.85	-0.12	101	461	80	69
55	8.844	0.165	0.016	2.82	86	1.0	-	7.73	-0.12	101	460	80	69
56	9.010	0.166	0.017	2.81	86	1.0	-	7.62	-0.11	101	458	79	69
57	9.179	0.169	0.016	2.81	86	1.0	-	7.50	-0.12	100	457	80	69
58	9.344	0.165	0.016	2.82	86	1.0	-	7.39	-0.11	100	455	79	69
59	9.511	0.167	0.016	2.82	87	1.0	-	7.28	-0.11	100	453	79	69
60	9.680	0.169	0.016	2.83	87	1.0	101	7.18	-0.10	100	452	79	69
61	9.845	0.165	0.016	2.83	87	1.0	-	7.08	-0.10	100	451	79	69
62	10.013	0.168	0.016	2.83	87	1.0	-	6.98	-0.10	100	449	79	69
63	10.182	0.169	0.016	2.83	87	1.0	-	6.88	-0.10	100	448	79	69

BOX A TEST DATA - ASTM E2780 / ASTM E2515

Client: FPI
Model: I3000
Run #: 2

Job #: 23-229
Tracking #: 169
Technician: AK
Date: 11/28/2023

	Particulate Sampling Data							Fuel Weight (lb)		Temperature Data (°F)			
Elapsed Time (min)	Gas Meter (ft^3)	Sample Rate (cfm)	Dilution Tunnel dP (in H_2O)	Orifice dH (in H_2O)	Meter Temp (°F)	Meter Vacuum (in Hg)	Pro. Rate (%)	Scale Reading	Weight Change	Dilution Tunnel	Flue	Filter	Ambient
64	10.348	0.166	0.016	2.85	88	1.0	-	6.78	-0.10	100	447	79	69
65	10.516	0.168	0.016	2.83	88	1.0	-	6.67	-0.11	100	445	79	69
66	10.685	0.169	0.016	2.83	88	1.0	-	6.57	-0.10	99	444	79	69
67	10.850	0.165	0.017	2.83	88	1.0	-	6.48	-0.09	99	444	79	68
68	11.019	0.169	0.017	2.85	89	1.0	-	6.37	-0.11	99	443	79	68
69	11.190	0.171	0.016	2.85	89	1.0	-	6.27	-0.10	99	443	79	68
70	11.355	0.165	0.016	2.86	89	1.0	101	6.16	-0.11	99	443	79	68
71	11.524	0.169	0.016	2.86	89	1.0	-	6.05	-0.11	99	444	79	68
72	11.695	0.171	0.016	2.86	89	1.0	-	5.94	-0.11	99	443	79	68
73	11.861	0.166	0.016	2.86	90	1.0	-	5.83	-0.11	99	442	79	68
74	12.028	0.167	0.016	2.85	90	1.0	-	5.72	-0.11	99	443	79	68
75	12.200	0.172	0.016	2.87	90	1.0	-	5.62	-0.10	99	444	79	68
76	12.369	0.169	0.016	2.86	90	1.0	-	5.51	-0.11	99	442	79	68
77	12.535	0.166	0.016	2.86	90	1.0	-	5.40	-0.11	99	443	79	68
78	12.705	0.170	0.016	2.87	90	1.1	-	5.29	-0.11	99	444	79	68
79	12.876	0.171	0.016	2.87	91	1.0	-	5.18	-0.11	99	444	79	68
80	13.043	0.167	0.016	2.87	91	1.0	101	5.07	-0.11	99	444	79	68
81	13.212	0.169	0.016	2.87	91	1.0	-	4.97	-0.10	99	444	79	68
82	13.383	0.171	0.016	2.86	91	1.0	-	4.86	-0.11	99	445	79	68
83	13.550	0.167	0.016	2.86	91	1.0	-	4.74	-0.12	99	445	79	68
84	13.720	0.170	0.016	2.87	91	1.0	-	4.63	-0.11	99	448	79	68
85	13.892	0.172	0.016	2.88	91	1.0	-	4.52	-0.11	99	447	79	68
86	14.059	0.167	0.016	2.88	92	1.0	-	4.42	-0.10	99	446	79	68
87	14.227	0.168	0.016	2.88	92	1.1	-	4.32	-0.10	99	445	79	68
88	14.399	0.172	0.016	2.88	92	1.0	-	4.21	-0.11	99	445	79	68
89	14.569	0.170	0.016	2.87	92	1.0	-	4.10	-0.11	99	446	79	68
90	14.736	0.167	0.016	2.88	92	1.0	101	4.01	-0.09	99	445	79	68
91	14.906	0.170	0.016	2.87	92	1.0	-	3.90	-0.11	99	444	79	68
92	15.078	0.172	0.016	2.89	92	1.0	-	3.80	-0.10	99	443	79	68
93	15.246	0.168	0.016	2.88	93	1.1	-	3.70	-0.10	99	442	79	68
94	15.416	0.170	0.016	2.88	93	1.0	-	3.61	-0.09	99	442	79	68
95	15.588	0.172	0.016	2.87	93	1.0	-	3.51	-0.10	99	441	79	68

BOX A TEST DATA - ASTM E2780 / ASTM E2515

Client: FPI
Model: I3000
Run #: 2

Job #: 23-229
Tracking #: 169
Technician: AK
Date: 11/28/2023

	Particulate Sampling Data							Fuel Weight (lb)		Temperature Data (°F)			
Elapsed Time (min)	Gas Meter (ft^3)	Sample Rate (cfm)	Dilution Tunnel dP (in H_2O)	Orifice dH (in H_2O)	Meter Temp (°F)	Meter Vacuum (in Hg)	Pro. Rate (%)	Scale Reading	Weight Change	Dilution Tunnel	Flue	Filter	Ambient
96	15.755	0.167	0.016	2.87	93	1.1	-	3.41	-0.10	99	440	79	68
97	15.925	0.170	0.016	2.89	93	1.1	-	3.32	-0.09	99	440	79	68
98	16.097	0.172	0.016	2.89	93	1.0	-	3.24	-0.08	98	439	79	68
99	16.268	0.171	0.016	2.87	93	1.0	-	3.15	-0.09	98	437	79	68
100	16.435	0.167	0.016	2.88	93	1.0	101	3.06	-0.09	98	436	79	68
101	16.606	0.171	0.016	2.88	93	1.0	-	2.96	-0.10	98	437	79	68
102	16.778	0.172	0.016	2.88	94	1.1	-	2.87	-0.09	98	436	79	68
103	16.946	0.168	0.016	2.89	94	1.0	-	2.77	-0.10	98	436	79	68
104	17.117	0.171	0.016	2.89	94	1.0	-	2.67	-0.10	98	435	79	68
105	17.289	0.172	0.016	2.88	94	1.0	-	2.58	-0.09	98	435	79	68
106	17.457	0.168	0.016	2.87	94	1.0	-	2.50	-0.08	98	433	79	68
107	17.625	0.168	0.016	2.88	94	1.0	-	2.42	-0.08	98	432	78	68
108	17.798	0.173	0.016	2.89	94	1.0	-	2.34	-0.08	98	431	78	68
109	17.970	0.172	0.016	2.89	94	1.0	-	2.27	-0.07	98	428	78	68
110	18.138	0.168	0.016	2.88	94	1.0	101	2.21	-0.06	97	424	78	68
111	18.309	0.171	0.016	2.89	94	1.0	-	2.14	-0.07	97	420	78	68
112	18.480	0.171	0.016	2.87	94	1.0	-	2.08	-0.06	97	418	78	68
113	18.649	0.169	0.016	2.88	95	1.0	-	2.01	-0.07	97	416	78	68
114	18.819	0.170	0.016	2.89	95	1.0	-	1.95	-0.06	97	415	78	68
115	18.992	0.173	0.016	2.88	95	1.0	-	1.89	-0.06	96	414	78	68
116	19.162	0.170	0.016	2.89	95	1.0	-	1.84	-0.05	96	413	78	68
117	19.329	0.167	0.016	2.88	95	1.0	-	1.79	-0.05	96	412	78	68
118	19.501	0.172	0.016	2.89	95	1.1	-	1.74	-0.05	96	410	78	68
119	19.673	0.172	0.016	2.89	95	1.0	-	1.69	-0.05	96	407	78	68
120	19.842	0.169	0.016	2.90	95	1.0	101	1.64	-0.05	96	407	78	68
121	20.013	0.171	0.016	2.88	95	1.0	-	1.61	-0.03	95	406	78	68
122	20.186	0.173	0.016	2.89	95	1.0	-	1.57	-0.04	96	403	78	68
123	20.354	0.168	0.016	2.89	95	1.1	-	1.53	-0.04	95	401	78	68
124	20.523	0.169	0.016	2.89	95	1.1	-	1.49	-0.04	95	399	78	68
125	20.696	0.173	0.016	2.90	95	1.1	-	1.45	-0.04	95	398	78	68
126	20.868	0.172	0.016	2.89	95	1.0	-	1.41	-0.04	95	395	78	68
127	21.036	0.168	0.016	2.89	95	1.0	-	1.37	-0.04	94	394	78	68

BOX A TEST DATA - ASTM E2780 / ASTM E2515

Client: FPI
Model: I3000
Run #: 2

Job #: 23-229
Tracking #: 169
Technician: AK
Date: 11/28/2023

	Particulate Sampling Data							Fuel Weight (lb)		Temperature Data (°F)			
Elapsed Time (min)	Gas Meter (ft^3)	Sample Rate (cfm)	Dilution Tunnel dP (in H_2O)	Orifice dH (in H_2O)	Meter Temp (°F)	Meter Vacuum (in Hg)	Pro. Rate (%)	Scale Reading	Weight Change	Dilution Tunnel	Flue	Filter	Ambient
128	21.207	0.171	0.016	2.89	96	1.1	-	1.34	-0.03	94	393	78	68
129	21.379	0.172	0.016	2.89	96	1.0	-	1.30	-0.04	94	392	78	68
130	21.547	0.168	0.016	2.89	96	1.0	101	1.26	-0.04	94	390	78	68
131	21.718	0.171	0.016	2.89	96	1.0	-	1.23	-0.03	94	388	78	68
132	21.892	0.174	0.016	2.90	96	1.0	-	1.19	-0.04	94	388	78	68
133	22.062	0.170	0.016	2.89	96	1.0	-	1.15	-0.04	94	387	78	68
134	22.230	0.168	0.016	2.90	96	1.0	-	1.11	-0.04	94	386	78	68
135	22.402	0.172	0.016	2.89	96	1.0	-	1.08	-0.03	93	383	78	68
136	22.574	0.172	0.016	2.90	96	1.0	-	1.04	-0.04	93	383	77	68
137	22.743	0.169	0.016	2.90	96	1.1	-	1.00	-0.04	93	381	77	68
138	22.915	0.172	0.016	2.90	96	1.0	-	0.97	-0.03	93	381	77	68
139	23.088	0.173	0.016	2.89	96	1.0	-	0.93	-0.04	93	380	77	68
140	23.259	0.171	0.016	2.91	96	1.0	101	0.89	-0.04	93	380	77	68
141	23.427	0.168	0.016	2.90	96	1.0	-	0.85	-0.04	93	379	77	68
142	23.599	0.172	0.016	2.89	96	1.0	-	0.82	-0.03	93	378	77	68
143	23.772	0.173	0.016	2.90	96	1.0	-	0.78	-0.04	93	377	77	68
144	23.941	0.169	0.016	2.91	96	1.0	-	0.74	-0.04	92	376	77	68
145	24.113	0.172	0.017	2.91	96	1.0	-	0.71	-0.03	92	376	77	68
146	24.286	0.173	0.016	2.90	96	1.0	-	0.67	-0.04	92	375	77	68
147	24.456	0.170	0.016	2.90	96	1.0	-	0.64	-0.03	92	375	77	68
148	24.624	0.168	0.016	2.89	96	1.0	-	0.60	-0.04	92	375	77	68
149	24.798	0.174	0.016	2.90	96	1.0	-	0.56	-0.04	92	375	77	68
150	24.970	0.172	0.015	2.91	97	1.0	102	0.52	-0.04	92	375	77	68
151	25.139	0.169	0.015	2.90	97	1.0	-	0.50	-0.02	92	374	77	68
152	25.311	0.172	0.016	2.90	97	1.0	-	0.45	-0.05	92	374	77	68
153	25.485	0.174	0.016	2.91	97	1.0	-	0.42	-0.03	92	374	77	68
154	25.655	0.170	0.015	2.89	97	1.0	-	0.38	-0.04	92	372	77	68
155	25.823	0.168	0.016	2.90	97	1.0	-	0.35	-0.03	92	371	77	68
156	25.997	0.174	0.016	2.91	97	1.0	-	0.31	-0.04	92	371	77	68
157	26.169	0.172	0.017	2.90	97	1.0	-	0.27	-0.04	92	370	77	68
158	26.339	0.170	0.016	2.90	97	1.0	-	0.24	-0.03	92	369	77	68
159	26.511	0.172	0.016	2.90	97	1.0	-	0.20	-0.04	92	370	77	67

BOX A TEST DATA - ASTM E2780 / ASTM E2515

Client: FPI
Model: I3000
Run #: 2

Job #: 23-229
Tracking #: 169
Technician: AK
Date: 11/28/2023

	Particulate Sampling Data							Fuel Weight (lb)		Temperature Data (°F)			
Elapsed Time (min)	Gas Meter (ft^3)	Sample Rate (cfm)	Dilution Tunnel dP (in H_2O)	Orifice dH (in H_2O)	Meter Temp (°F)	Meter Vacuum (in Hg)	Pro. Rate (%)	Scale Reading	Weight Change	Dilution Tunnel	Flue	Filter	Ambient
160	26.684	0.173	0.017	2.91	97	1.0	101	0.16	-0.04	91	369	77	68
161	26.854	0.170	0.016	2.90	97	1.0	-	0.13	-0.03	92	368	77	68
162	27.023	0.169	0.016	2.90	97	1.1	-	0.10	-0.03	91	368	77	68
163	27.196	0.173	0.016	2.91	97	1.0	-	0.07	-0.03	91	368	77	68
164	27.369	0.173	0.016	2.92	97	1.0	-	0.03	-0.04	91	368	77	67
165	27.538	0.169	0.016	2.91	97	1.0	101	0.00	-0.03	91	368	77	67
Avg/Tot	27.538	0.167	0.016	2.79	87.9	1.0	100			98.5	433.5	78.0	68.3

BOX B TEST DATA - ASTM E2780 / ASTM E2515

Client: FPI
Model: I3000
Run #: 2

Job #: 23-229
Tracking #: 169
Technician: AK
Date: 11/28/2023

	Particulate Sampling Data							Flue Gas Data		
Elapsed Time (min)	Gas Meter (ft^3)	Sample Rate (cfm)	Orifice dH (in H_2O)	Meter Temp (°F)	Meter Vacuum (in Hg)	Pro. Rate (%)	Filter (°F)	Flue Draft (in H_2O)	CO_2 (%)	CO (%)
0	0.000		0.18	72	1.2		73	-0.070	3.85	0.040
1	0.146	0.146	2.78	72	2.0	-	73	-0.070	2.49	0.041
2	0.309	0.163	2.78	72	2.0	-	74	-0.073	6.91	0.037
3	0.472	0.163	2.78	72	2.1	-	74	-0.076	9.77	0.059
4	0.632	0.160	2.78	72	1.9	-	74	-0.080	11.22	0.077
5	0.795	0.163	2.78	72	1.9	-	74	-0.082	12.35	0.214
6	0.957	0.162	2.78	72	1.6	-	75	-0.082	13.01	0.362
7	1.118	0.161	2.79	72	2.1	-	75	-0.083	12.73	0.235
8	1.281	0.163	2.79	72	2.1	-	75	-0.085	12.90	0.345
9	1.444	0.163	2.79	73	2.1	-	75	-0.082	13.16	0.511
10	1.604	0.160	2.79	73	2.0	99	76	-0.084	13.21	0.464
11	1.770	0.166	2.79	73	1.6	-	76	-0.084	13.32	0.480
12	1.929	0.159	2.78	73	1.9	-	76	-0.086	13.30	0.426
13	2.093	0.164	2.80	73	1.7	-	76	-0.086	13.35	0.503
14	2.257	0.164	2.80	74	2.1	-	76	-0.085	13.18	0.376
15	2.417	0.160	2.79	74	2.1	-	77	-0.087	13.45	0.538
16	2.581	0.164	2.80	74	1.9	-	77	-0.085	13.60	0.548
17	2.745	0.164	2.80	74	2.1	-	77	-0.086	13.60	0.549
18	2.906	0.161	2.80	74	1.6	-	77	-0.085	13.56	0.542
19	3.070	0.164	2.79	75	2.1	-	77	-0.086	13.63	0.516
20	3.235	0.165	2.81	75	1.8	101	77	-0.084	13.70	0.538
21	3.396	0.161	2.81	75	1.6	-	77	-0.085	13.73	0.503
22	3.561	0.165	2.81	76	1.7	-	77	-0.086	13.85	0.508
23	3.725	0.164	2.81	76	1.6	-	78	-0.086	13.99	0.569
24	3.886	0.161	2.80	76	1.6	-	78	-0.086	14.10	0.682
25	4.053	0.167	2.82	77	2.1	-	78	-0.083	14.24	0.676
26	4.215	0.162	2.81	77	2.0	-	78	-0.085	14.19	1.217
27	4.378	0.163	2.81	77	1.6	-	78	-0.086	14.23	1.399
28	4.545	0.167	2.80	78	1.7	-	78	-0.085	14.35	1.425
29	4.706	0.161	2.80	78	1.6	-	78	-0.086	14.32	1.267
30	4.870	0.164	2.81	78	2.1	101	78	-0.085	14.35	0.996
31	5.037	0.167	2.81	79	2.0	-	78	-0.084	14.41	0.996

BOX B TEST DATA - ASTM E2780 / ASTM E2515

Client: FPI
Model: I3000
Run #: 2

Job #: 23-229
Tracking #: 169
Technician: AK
Date: 11/28/2023

	Particulate Sampling Data							Flue Gas Data		
Elapsed Time (min)	Gas Meter (ft^3)	Sample Rate (cfm)	Orifice dH (in H_2O)	Meter Temp (°F)	Meter Vacuum (in Hg)	Pro. Rate (%)	Filter (°F)	Flue Draft (in H_2O)	CO_2 (%)	CO (%)
32	5.198	0.161	2.80	79	1.8	-	78	-0.084	14.39	1.037
33	5.364	0.166	2.81	79	1.9	-	79	-0.086	14.34	1.000
34	5.529	0.165	2.81	80	2.1	-	79	-0.085	14.32	0.888
35	5.691	0.162	2.81	80	1.8	-	79	-0.086	14.19	0.724
36	5.857	0.166	2.81	80	1.7	-	79	-0.085	13.59	0.609
37	6.022	0.165	2.81	81	2.2	-	79	-0.083	12.99	0.453
38	6.185	0.163	2.81	81	2.1	-	79	-0.082	12.62	0.253
39	6.351	0.166	2.81	81	1.8	-	79	-0.084	12.86	0.198
40	6.516	0.165	2.81	82	1.8	101	79	-0.083	12.94	0.176
41	6.680	0.164	2.82	82	1.9	-	79	-0.083	13.04	0.243
42	6.846	0.166	2.82	82	1.6	-	79	-0.082	12.46	0.425
43	7.012	0.166	2.81	83	1.6	-	79	-0.081	12.17	0.331
44	7.175	0.163	2.82	83	1.7	-	79	-0.081	11.91	0.248
45	7.342	0.167	2.82	83	1.8	-	79	-0.081	12.24	0.075
46	7.508	0.166	2.82	83	1.7	-	79	-0.082	12.52	0.091
47	7.671	0.163	2.82	84	1.6	-	79	-0.081	12.48	0.162
48	7.839	0.168	2.83	84	1.8	-	79	-0.081	12.59	0.165
49	8.005	0.166	2.82	84	1.6	-	79	-0.080	12.48	0.054
50	8.169	0.164	2.82	85	1.7	100	79	-0.081	12.24	0.043
51	8.336	0.167	2.83	85	2.1	-	79	-0.080	12.04	0.030
52	8.503	0.167	2.83	85	2.0	-	79	-0.081	11.90	0.030
53	8.667	0.164	2.83	85	1.7	-	79	-0.081	11.75	0.023
54	8.834	0.167	2.84	86	2.2	-	79	-0.081	11.71	0.032
55	9.002	0.168	2.84	86	1.6	-	79	-0.081	11.55	0.033
56	9.166	0.164	2.83	86	1.6	-	79	-0.078	11.57	0.033
57	9.333	0.167	2.84	86	1.8	-	79	-0.082	11.36	0.025
58	9.502	0.169	2.84	87	1.9	-	79	-0.080	10.83	0.033
59	9.667	0.165	2.84	87	1.8	-	80	-0.079	10.49	0.037
60	9.832	0.165	2.84	87	2.0	100	79	-0.080	10.33	0.026
61	10.001	0.169	2.85	87	2.0	-	79	-0.078	10.24	0.018
62	10.167	0.166	2.85	88	1.9	-	80	-0.080	10.21	0.018
63	10.331	0.164	2.84	88	2.0	-	79	-0.078	10.10	0.022

BOX B TEST DATA - ASTM E2780 / ASTM E2515

Client: FPI
Model: I3000
Run #: 2

Job #: 23-229
Tracking #: 169
Technician: AK
Date: 11/28/2023

	Particulate Sampling Data							Flue Gas Data		
Elapsed Time (min)	Gas Meter (ft^3)	Sample Rate (cfm)	Orifice dH (in H_2O)	Meter Temp (°F)	Meter Vacuum (in Hg)	Pro. Rate (%)	Filter (°F)	Flue Draft (in H_2O)	CO_2 (%)	CO (%)
64	10.500	0.169	2.84	88	1.7	-	79	-0.078	10.17	0.021
65	10.668	0.168	2.85	88	1.6	-	79	-0.077	10.14	0.023
66	10.832	0.164	2.85	88	1.9	-	79	-0.079	10.16	0.021
67	11.000	0.168	2.85	89	1.7	-	79	-0.080	10.25	0.021
68	11.168	0.168	2.85	89	1.6	-	79	-0.078	10.33	0.019
69	11.333	0.165	2.85	89	1.8	-	79	-0.077	10.47	0.021
70	11.501	0.168	2.85	89	2.2	100	79	-0.079	10.58	0.017
71	11.669	0.168	2.85	89	1.8	-	79	-0.079	10.78	0.016
72	11.834	0.165	2.86	90	2.1	-	79	-0.079	10.93	0.012
73	12.003	0.169	2.85	90	2.1	-	79	-0.077	10.98	0.015
74	12.171	0.168	2.86	90	1.8	-	79	-0.081	10.96	0.019
75	12.336	0.165	2.86	90	1.9	-	79	-0.079	10.71	0.014
76	12.504	0.168	2.86	90	2.1	-	79	-0.080	10.79	0.011
77	12.674	0.170	2.86	90	2.1	-	79	-0.080	10.97	0.012
78	12.840	0.166	2.86	91	1.8	-	79	-0.079	10.77	0.017
79	13.006	0.166	2.86	91	1.6	-	79	-0.079	10.80	0.019
80	13.175	0.169	2.86	91	1.8	100	79	-0.077	10.70	0.023
81	13.343	0.168	2.86	91	2.1	-	79	-0.078	11.03	0.017
82	13.509	0.166	2.86	91	2.0	-	79	-0.080	11.31	0.052
83	13.677	0.168	2.85	91	2.1	-	79	-0.080	11.70	0.042
84	13.846	0.169	2.86	91	1.6	-	79	-0.078	11.72	0.047
85	14.013	0.167	2.87	92	2.1	-	79	-0.080	11.38	0.045
86	14.181	0.168	2.86	92	1.8	-	79	-0.080	11.20	0.050
87	14.350	0.169	2.87	92	2.0	-	79	-0.079	11.13	0.050
88	14.516	0.166	2.86	92	1.8	-	79	-0.078	11.16	0.049
89	14.684	0.168	2.87	92	2.0	-	79	-0.079	11.06	0.048
90	14.854	0.170	2.86	92	1.8	100	79	-0.078	10.95	0.049
91	15.020	0.166	2.86	92	1.6	-	79	-0.081	10.79	0.048
92	15.187	0.167	2.86	92	2.1	-	79	-0.078	10.60	0.066
93	15.357	0.170	2.87	93	1.9	-	79	-0.078	10.61	0.058
94	15.526	0.169	2.87	93	1.8	-	79	-0.080	10.59	0.057
95	15.692	0.166	2.87	93	2.0	-	79	-0.080	10.62	0.053

BOX B TEST DATA - ASTM E2780 / ASTM E2515

Client: FPI
Model: I3000
Run #: 2

Job #: 23-229
Tracking #: 169
Technician: AK
Date: 11/28/2023

	Particulate Sampling Data							Flue Gas Data		
Elapsed Time (min)	Gas Meter (ft^3)	Sample Rate (cfm)	Orifice dH (in H_2O)	Meter Temp (°F)	Meter Vacuum (in Hg)	Pro. Rate (%)	Filter (°F)	Flue Draft (in H_2O)	CO_2 (%)	CO (%)
96	15.861	0.169	2.87	93	2.2	-	79	-0.079	10.54	0.074
97	16.030	0.169	2.87	93	2.1	-	79	-0.079	10.31	0.086
98	16.196	0.166	2.87	93	1.7	-	79	-0.078	10.22	0.090
99	16.366	0.170	2.86	93	1.7	-	79	-0.080	10.18	0.079
100	16.535	0.169	2.87	93	2.0	100	79	-0.077	10.24	0.065
101	16.700	0.165	2.86	93	1.9	-	79	-0.079	10.29	0.063
102	16.869	0.169	2.87	93	1.7	-	79	-0.078	10.61	0.066
103	17.040	0.171	2.87	93	2.1	-	79	-0.078	10.69	0.071
104	17.207	0.167	2.85	94	1.6	-	79	-0.079	10.75	0.069
105	17.374	0.167	2.86	94	1.6	-	79	-0.079	10.72	0.077
106	17.543	0.169	2.86	94	2.1	-	79	-0.077	10.48	0.050
107	17.712	0.169	2.86	94	1.6	-	79	-0.077	10.14	0.024
108	17.879	0.167	2.86	94	1.8	-	79	-0.078	9.73	0.020
109	18.048	0.169	2.87	94	1.7	-	79	-0.076	9.41	0.017
110	18.218	0.170	2.86	94	2.1	100	79	-0.077	9.22	0.014
111	18.384	0.166	2.87	94	2.1	-	79	-0.076	9.28	0.015
112	18.552	0.168	2.86	94	1.7	-	79	-0.074	9.22	0.013
113	18.724	0.172	2.86	94	1.9	-	79	-0.076	9.34	0.016
114	18.891	0.167	2.86	94	2.1	-	79	-0.076	9.24	0.018
115	19.057	0.166	2.87	94	1.6	-	79	-0.075	8.85	0.026
116	19.228	0.171	2.87	94	1.6	-	79	-0.075	8.58	0.028
117	19.397	0.169	2.86	94	2.2	-	79	-0.076	8.52	0.019
118	19.564	0.167	2.87	94	1.7	-	79	-0.073	8.55	0.023
119	19.734	0.170	2.87	94	1.6	-	79	-0.073	8.51	0.018
120	19.903	0.169	2.87	94	1.9	100	79	-0.075	8.40	0.018
121	20.069	0.166	2.87	95	2.2	-	79	-0.073	8.17	0.021
122	20.238	0.169	2.87	95	1.9	-	79	-0.072	8.06	0.021
123	20.410	0.172	2.86	95	2.0	-	79	-0.072	7.94	0.018
124	20.577	0.167	2.86	95	2.1	-	79	-0.072	7.98	0.016
125	20.744	0.167	2.86	95	2.0	-	79	-0.073	7.99	0.020
126	20.914	0.170	2.87	95	1.7	-	79	-0.071	7.93	0.021
127	21.083	0.169	2.87	95	2.1	-	78	-0.070	7.94	0.020

BOX B TEST DATA - ASTM E2780 / ASTM E2515

Client: FPI
Model: I3000
Run #: 2

Job #: 23-229
Tracking #: 169
Technician: AK
Date: 11/28/2023

	Particulate Sampling Data							Flue Gas Data		
Elapsed Time (min)	Gas Meter (ft^3)	Sample Rate (cfm)	Orifice dH (in H_2O)	Meter Temp (°F)	Meter Vacuum (in Hg)	Pro. Rate (%)	Filter (°F)	Flue Draft (in H_2O)	CO_2 (%)	CO (%)
128	21.251	0.168	2.86	95	2.1	-	78	-0.073	7.95	0.018
129	21.420	0.169	2.86	95	1.6	-	78	-0.071	8.06	0.018
130	21.590	0.170	2.87	95	1.7	100	78	-0.071	8.19	0.020
131	21.756	0.166	2.87	95	1.8	-	78	-0.072	8.11	0.023
132	21.925	0.169	2.87	95	1.6	-	78	-0.072	8.10	0.021
133	22.096	0.171	2.87	95	1.7	-	78	-0.073	8.05	0.018
134	22.264	0.168	2.87	95	1.9	-	78	-0.070	8.15	0.019
135	22.431	0.167	2.87	95	1.6	-	78	-0.071	8.14	0.020
136	22.601	0.170	2.87	95	1.7	-	78	-0.069	8.13	0.022
137	22.771	0.170	2.88	95	2.0	-	78	-0.071	8.16	0.021
138	22.938	0.167	2.88	95	2.0	-	78	-0.069	8.15	0.021
139	23.108	0.170	2.87	95	1.6	-	78	-0.069	8.18	0.021
140	23.278	0.170	2.88	95	2.0	100	78	-0.070	8.08	0.024
141	23.444	0.166	2.88	95	1.6	-	78	-0.068	8.09	0.019
142	23.613	0.169	2.87	95	2.0	-	78	-0.070	8.15	0.022
143	23.784	0.171	2.87	95	2.1	-	78	-0.071	8.13	0.023
144	23.954	0.170	2.87	95	1.7	-	78	-0.069	8.13	0.024
145	24.120	0.166	2.88	95	2.1	-	78	-0.069	8.14	0.023
146	24.290	0.170	2.87	95	2.1	-	78	-0.071	8.09	0.021
147	24.459	0.169	2.87	95	1.6	-	78	-0.070	8.11	0.023
148	24.627	0.168	2.88	95	1.8	-	78	-0.069	8.07	0.022
149	24.796	0.169	2.88	95	2.1	-	78	-0.070	8.00	0.023
150	24.967	0.171	2.87	95	2.1	101	78	-0.070	8.08	0.023
151	25.135	0.168	2.87	96	1.6	-	78	-0.070	8.07	0.023
152	25.302	0.167	2.87	95	2.1	-	78	-0.068	8.03	0.022
153	25.473	0.171	2.87	96	1.9	-	78	-0.069	8.03	0.021
154	25.642	0.169	2.88	96	2.1	-	78	-0.069	7.97	0.022
155	25.810	0.168	2.88	96	1.6	-	78	-0.068	7.95	0.021
156	25.980	0.170	2.87	96	2.0	-	78	-0.069	8.01	0.021
157	26.150	0.170	2.88	96	2.0	-	78	-0.071	7.97	0.023
158	26.316	0.166	2.87	96	2.1	-	78	-0.069	7.99	0.018
159	26.485	0.169	2.87	96	1.9	-	77	-0.068	7.97	0.026

BOX B TEST DATA - ASTM E2780 / ASTM E2515

Client: FPI
Model: I3000
Run #: 2

Job #: 23-229
Tracking #: 169
Technician: AK
Date: 11/28/2023

	Particulate Sampling Data							Flue Gas Data		
Elapsed Time (min)	Gas Meter (ft^3)	Sample Rate (cfm)	Orifice dH (in H_2O)	Meter Temp (°F)	Meter Vacuum (in Hg)	Pro. Rate (%)	Filter (°F)	Flue Draft (in H_2O)	CO_2 (%)	CO (%)
160	26.657	0.172	2.88	96	1.9	100	77	-0.068	8.01	0.023
161	26.825	0.168	2.87	96	1.8	-	77	-0.068	7.92	0.023
162	26.993	0.168	2.88	96	1.6	-	77	-0.069	7.84	0.027
163	27.162	0.169	2.87	96	1.9	-	77	-0.070	7.82	0.020
164	27.332	0.170	2.88	96	1.6	-	77	-0.068	7.78	0.025
165	27.499	0.167	2.87	96	1.9	99	77	-0.069	7.36	0.021
Avg/Tot	27.499	0.167	2.83	87.8	1.9	100	78.2	-0.078	10.49	0.170

BOX C TEST DATA - ASTM E2780 / ASTM E2515

Client: FPI
Model: I3000
Run #: 2

Job #: 23-229
Tracking #: 169
Technician: AK
Date: 11/28/2023

	Particulate Sampling Data						
Elapsed Time (min)	Gas Meter (ft^3)	Sample Rate (cfm)	Orifice dH (in H_2O)	Meter Temp (°F)	Meter Vacuum (in Hg)	Pro. Rate (%)	Filter (°F)
0	0.000		0.08	71	0.8		71
1	0.140	0.140	0.93	70	1.6	-	71
2	0.281	0.141	0.94	70	1.7	-	71
3	0.421	0.140	0.93	70	1.6	-	71
4	0.564	0.143	0.95	70	1.6	-	72
5	0.704	0.140	0.93	70	1.6	-	72
6	0.847	0.143	0.95	70	1.7	-	72
7	0.988	0.141	0.95	71	1.7	-	72
8	1.131	0.143	0.95	71	1.6	-	72
9	1.275	0.144	0.97	71	1.7	-	73
10	1.417	0.142	0.95	71	1.8	98	73
11	1.562	0.145	0.97	72	1.7	-	73
12	1.705	0.143	0.97	72	1.6	-	73
13	1.849	0.144	0.96	72	1.8	-	73
14	1.994	0.145	0.98	72	1.6	-	73
15	2.138	0.144	0.98	73	1.6	-	74
16	2.282	0.144	0.96	73	1.7	-	74
17	2.428	0.146	0.98	73	1.7	-	74
18	2.573	0.145	0.99	74	1.6	-	74
19	2.717	0.144	0.98	74	1.7	-	74
20	2.862	0.145	0.98	74	1.8	100	74
21	3.009	0.147	0.99	75	1.7	-	74
22	3.154	0.145	0.99	75	1.8	-	74
23	3.299	0.145	0.98	75	1.8	-	74
24	3.446	0.147	0.99	75	1.8	-	74
25	3.592	0.146	1.00	75	1.6	-	74
26	3.738	0.146	0.99	76	1.7	-	75
27	3.883	0.145	0.98	76	1.6	-	75
28	4.031	0.148	1.00	76	1.7	-	75
29	4.177	0.146	1.00	77	1.8	-	75
30	4.324	0.147	1.00	77	1.6	100	75
31	4.470	0.146	0.99	77	1.7	-	75

BOX C TEST DATA - ASTM E2780 / ASTM E2515

Client: FPI
Model: I3000
Run #: 2

Job #: 23-229
Tracking #: 169
Technician: AK
Date: 11/28/2023

	Particulate Sampling Data						
Elapsed Time (min)	Gas Meter (ft^3)	Sample Rate (cfm)	Orifice dH (in H_2O)	Meter Temp (°F)	Meter Vacuum (in Hg)	Pro. Rate (%)	Filter (°F)
32	4.617	0.147	1.00	77	1.6	-	75
33	4.766	0.149	1.01	77	1.6	-	75
34	4.913	0.147	1.01	78	1.6	-	75
35	5.061	0.148	1.00	78	1.7	-	75
36	5.208	0.147	1.00	78	1.8	-	75
37	5.356	0.148	1.01	78	1.7	-	75
38	5.506	0.150	1.01	79	1.6	-	75
39	5.654	0.148	1.02	78	1.7	-	75
40	5.802	0.148	1.02	79	1.7	101	76
41	5.951	0.149	1.01	80	1.6	-	75
42	6.100	0.149	1.01	79	1.8	-	76
43	6.249	0.149	1.01	80	1.7	-	76
44	6.398	0.149	1.02	80	1.8	-	76
45	6.549	0.151	1.02	80	1.8	-	76
46	6.698	0.149	1.03	80	1.6	-	76
47	6.848	0.150	1.03	81	1.7	-	76
48	6.998	0.150	1.03	80	1.7	-	76
49	7.148	0.150	1.02	80	1.7	-	76
50	7.298	0.150	1.02	81	1.6	102	76
51	7.448	0.150	1.02	81	1.8	-	76
52	7.599	0.151	1.02	80	1.8	-	76
53	7.749	0.150	1.03	81	1.7	-	76
54	7.900	0.151	1.03	81	1.7	-	76
55	8.051	0.151	1.04	81	1.7	-	76
56	8.203	0.152	1.04	81	1.8	-	76
57	8.354	0.151	1.04	81	1.8	-	76
58	8.505	0.151	1.04	82	1.6	-	76
59	8.656	0.151	1.04	82	1.6	-	76
60	8.808	0.152	1.04	82	1.8	102	76
Avg/Tot	8.808	0.147	0.98	76.2	1.7	100	74.4

WOODSTOVE SURFACE TEMPERATURE DATA

Client: FPI
Model: I3000
Run #: 2

Job #: 23-229
Tracking #: 169
Technician: AK
Date: 11/28/2023

Stove ΔT: 33

	Temperature Data (°F)						
Elapsed Time (min)	FB Left	FB Right	FB Back	FB Top	FB Bottom	Stove Surface Average	Catalyst Exit
0	430	426	237	535	298	385.0	787.3
1	431	427	240	519	307	384.6	702.2
2	432	427	242	514	316	386.2	722.4
3	432	428	243	515	326	388.6	823.5
4	432	427	244	517	335	390.9	924.4
5	431	426	244	527	344	394.3	987.4
6	429	425	245	541	352	398.3	1014.3
7	427	423	249	555	359	402.7	1016.4
8	425	420	249	574	366	406.8	1025.3
9	422	419	250	589	373	410.4	1032.9
10	420	416	250	602	378	413.2	1038.8
11	417	414	250	617	383	416.2	1041.9
12	415	412	250	629	388	418.6	1046.0
13	412	410	250	640	392	421.0	1046.9
14	409	409	251	651	396	423.3	1048.4
15	407	407	249	665	399	425.3	1050.1
16	405	405	249	672	395	425.2	1048.9
17	403	403	248	678	388	424.1	1048.1
18	401	402	245	682	380	422.0	1048.6
19	399	401	246	685	372	420.7	1048.5
20	397	400	244	688	364	418.6	1047.9
21	396	399	243	690	357	416.8	1048.1
22	394	398	239	693	350	414.9	1049.5
23	392	398	239	695	344	413.7	1049.7
24	391	398	238	698	338	412.6	1050.7
25	390	397	236	700	333	411.5	1050.7
26	389	397	235	704	329	410.7	1050.2
27	388	397	232	708	325	409.9	1046.8
28	388	397	231	710	321	409.4	1044.0
29	387	397	231	712	318	408.8	1046.8
30	386	397	230	715	315	408.5	1053.9
31	385	397	228	718	313	408.2	1055.7
32	385	397	227	720	310	407.8	1054.7
33	385	398	226	722	308	407.5	1054.0
34	385	398	226	724	305	407.5	1057.4
35	385	398	224	726	303	407.2	1063.4
36	385	399	224	726	301	407.1	1062.1
37	386	400	222	726	300	406.6	1049.6
38	386	400	222	725	298	406.2	1037.3
39	386	401	222	723	296	405.5	1043.5
40	387	401	221	721	295	405.0	1046.1
41	387	402	220	718	294	404.1	1044.2
42	388	403	220	717	292	404.0	1030.8
43	388	403	220	715	291	403.6	1009.7
44	389	404	220	714	290	403.3	996.7
45	389	405	220	710	290	402.6	998.1
46	389	406	219	707	289	401.8	1013.6
47	389	407	219	706	288	401.5	1015.3

WOODSTOVE SURFACE TEMPERATURE DATA

Client: FPI
Model: I3000
Run #: 2

Job #: 23-229
Tracking #: 169
Technician: AK
Date: 11/28/2023

Stove ΔT: 33

	Temperature Data (°F)						
Elapsed Time (min)	FB Left	FB Right	FB Back	FB Top	FB Bottom	Stove Surface Average	Catalyst Exit
48	390	407	217	705	287	401.4	1012.3
49	389	408	217	703	287	400.7	1015.2
50	390	408	217	702	286	400.4	1015.9
51	390	409	217	700	285	400.3	1011.3
52	390	410	217	700	285	400.2	1005.8
53	390	411	216	698	284	399.6	1002.1
54	390	411	215	695	283	398.8	999.1
55	390	412	216	693	282	398.5	996.4
56	390	413	216	690	281	397.9	992.7
57	390	413	215	686	281	397.0	988.1
58	390	414	215	684	280	396.5	981.0
59	390	414	216	681	279	395.9	970.9
60	390	415	215	677	278	394.8	966.2
61	389	415	215	673	277	393.8	966.7
62	389	416	214	669	277	392.9	965.9
63	389	416	214	664	276	391.8	961.0
64	389	417	215	660	275	390.9	952.5
65	389	417	214	655	274	389.7	949.8
66	389	417	215	651	273	389.1	950.6
67	389	418	216	647	273	388.3	949.6
68	388	417	214	643	272	387.0	945.7
69	388	418	215	639	271	386.2	943.9
70	388	418	215	637	270	385.4	944.5
71	388	418	215	634	269	384.7	944.4
72	388	418	214	632	269	383.8	942.2
73	387	418	215	632	268	384.0	941.7
74	387	418	215	630	267	383.3	942.9
75	386	417	215	630	266	382.8	941.7
76	386	418	216	630	266	382.9	940.4
77	386	418	215	629	265	382.6	941.2
78	386	418	214	630	264	382.2	946.4
79	386	417	216	628	264	382.1	953.4
80	386	417	216	628	263	381.9	954.8
81	385	417	215	627	263	381.4	959.3
82	385	417	216	627	262	381.4	966.3
83	385	417	216	627	262	381.3	970.4
84	385	417	216	626	261	380.8	974.2
85	385	416	217	626	260	380.9	969.9
86	385	417	216	626	260	380.7	960.3
87	385	417	216	625	259	380.4	953.1
88	385	417	217	624	259	380.3	950.4
89	386	417	217	623	258	380.2	948.2
90	386	417	217	623	258	380.0	944.9
91	386	417	217	620	257	379.5	941.1
92	386	418	217	618	257	379.2	938.8
93	387	418	218	617	257	379.2	943.4
94	387	418	218	614	256	378.8	950.9
95	388	419	218	614	256	379.0	952.2

WOODSTOVE SURFACE TEMPERATURE DATA

Client: FPI
Model: I3000
Run #: 2

Job #: 23-229
Tracking #: 169
Technician: AK
Date: 11/28/2023

Stove ΔT: 33

	Temperature Data (°F)						
Elapsed Time (min)	FB Left	FB Right	FB Back	FB Top	FB Bottom	Stove Surface Average	Catalyst Exit
96	388	420	218	612	256	378.6	953.0
97	388	420	221	611	255	379.0	953.4
98	388	421	219	610	255	378.6	949.6
99	389	422	222	608	255	378.9	942.9
100	388	423	222	604	255	378.4	940.7
101	389	424	223	603	255	378.6	940.6
102	390	425	225	601	255	378.9	940.8
103	390	426	226	599	254	378.7	934.1
104	390	426	226	596	254	378.5	929.3
105	390	427	228	594	254	378.6	922.4
106	391	428	228	593	254	378.8	917.7
107	391	429	229	592	254	378.7	915.5
108	391	430	230	591	254	379.0	909.8
109	392	431	231	589	253	379.0	895.1
110	392	431	233	586	253	379.1	878.5
111	392	432	234	583	253	378.7	866.5
112	392	432	235	580	253	378.5	859.0
113	393	432	236	577	253	378.2	853.4
114	393	433	236	572	253	377.2	857.7
115	393	433	237	570	253	377.1	866.1
116	394	433	237	567	253	376.7	870.1
117	394	434	239	565	253	376.7	863.9
118	394	434	240	560	253	376.2	855.9
119	394	434	240	559	253	376.1	850.0
120	394	434	241	556	254	375.7	845.3
121	395	434	242	553	254	375.6	840.8
122	395	435	241	549	255	374.8	836.0
123	395	434	241	546	255	374.2	831.4
124	395	435	242	543	256	374.1	826.8
125	395	435	241	540	256	373.3	823.1
126	394	434	243	536	257	372.8	819.2
127	395	434	241	533	258	372.0	815.1
128	395	434	242	529	258	371.3	811.2
129	395	433	241	524	259	370.6	808.5
130	394	433	240	523	260	369.9	806.4
131	394	432	241	520	260	369.3	803.6
132	394	431	240	516	261	368.2	800.7
133	393	430	239	513	261	367.3	798.1
134	394	430	239	509	262	366.6	794.7
135	393	429	240	507	262	366.3	789.8
136	392	428	240	504	263	365.3	786.9
137	392	427	240	501	263	364.7	785.4
138	392	426	238	499	264	363.7	784.3
139	392	425	239	496	264	363.3	783.2
140	392	425	238	493	264	362.4	781.4
141	392	424	239	491	265	362.1	779.7
142	391	423	239	489	265	361.5	778.5
143	391	423	238	487	266	361.0	776.8

WOODSTOVE SURFACE TEMPERATURE DATA

Client: FPI
Model: I3000
Run #: 2

Job #: 23-229
Tracking #: 169
Technician: AK
Date: 11/28/2023

Stove ΔT: 33

	Temperature Data (°F)						
Elapsed Time (min)	FB Left	FB Right	FB Back	FB Top	FB Bottom	Stove Surface Average	Catalyst Exit
144	390	422	239	485	266	360.3	774.5
145	390	421	240	484	266	360.1	772.4
146	390	421	239	482	266	359.4	771.4
147	389	420	240	480	266	358.9	771.0
148	389	419	241	478	266	358.7	771.1
149	389	419	240	477	266	358.2	771.1
150	388	419	240	476	266	357.8	770.8
151	388	418	241	474	266	357.4	770.0
152	388	417	240	473	265	356.8	766.8
153	387	417	240	472	265	356.0	761.1
154	387	416	240	470	265	355.6	757.2
155	387	416	241	469	264	355.4	755.8
156	387	415	240	468	264	354.7	755.8
157	386	415	241	467	263	354.5	755.1
158	386	415	242	465	263	354.1	754.4
159	385	414	241	466	263	353.6	753.6
160	385	414	242	463	262	353.3	752.9
161	385	413	241	464	262	353.0	752.3
162	385	413	241	463	262	352.7	752.1
163	384	413	241	460	262	352.0	751.7
164	384	412	241	459	262	351.6	750.3
165	384	412	242	459	262	351.5	748.6
Average	392.7	417.1	230.3	602.1	283.8	385.2	919.6

LAB SAMPLE DATA - ASTM E2515

Client: FPI
Model: I3000
Run #: 2

Job #: 23-229
Tracking #: 169
Technician: AK
Date: 11/28/2023

		Sample ID	Tare, mg	Final, mg	Catch, mg
Filters	**A**	G00757	250.9	251.9	1.0
	B	G00758	250.5	252.0	1.5
	C - 1st Hour	G00759	250.9	251.7	0.8
	Amb	G00760	250.0	250.2	0.2
Probes	**A**	2A	116057.3	116057.8	0.5
	B	2B	116174.3	116174.6	0.3
	C - 1st Hour	2C	116429.6	116429.8	0.2
O-rings	**A**	2A	3554.8	3554.9	0.1
	B	2B	3574.0	3574.0	0.0
	C - 1st Hour	2C	3391.9	3391.9	0.0

Placed in Dessicator on:	11/29/2023

Balance Audit (mg):		200.0		200.0		200.0			
		Weight (mg)	Date/Time	Weight (mg)	Date/Time	Weight (mg)	Date/Time	Weight (mg)	Date/Time
Filters	**A**	251.7	12/1 14:00	252.1	12/4 10:00	251.9	12/6 15:00		
	B	251.9	12/1 14:00	252.2	12/4 10:00	252.0	12/6 15:00		
	C - 1st Hour	251.6	12/1 14:00	251.9	12/4 10:00	251.7	12/6 15:00		
	Amb	250.1	12/1 14:00	250.2	12/4 10:00				
Probes	**A**	116057.6	12/1 14:00	116057.8	12/4 10:00				
	B	116174.5	12/1 14:00	116174.6	12/4 10:00				
	C - 1st Hour	116429.9	12/1 14:00	116429.8	12/4 10:00				
O-Rings	**A**	3554.9	12/1 14:00	3554.9	12/4 10:00				
	B	3574.0	12/1 14:00	3574.0	12/4 10:00				
	C - 1st Hour	3391.9	12/1 14:00	3391.9	12/4 10:00				

Train A Aggregate, mg:	**1.6**
Train B Aggregate, mg:	**1.8**
Train C Aggregate, mg:	**1.0**
Ambient, mg:	**0.2**

ASTM E2780 Wood Heater Run Sheets

Client: FPI Job Number: 23-229 Tracking #: 169
Model: I3000 Run Number: 2 Test Date: 11/28/23

Wood Heater Run Notes

Test Control Settings

Primary Air Setting(s): Fully Open
Targeted Burn Category: IV

Preburn Notes

Time	Notes
	-None-

Test Notes

Test Burn Start Time: 13:43 Test Fuel Loaded by: 45 seconds
Door Closed: 50 seconds Air Control Set at: 0 seconds
Other Loading Notes: Bypass open while door open, fan set to high @ 15 min

Time	Notes
	-None-

Test Burn End Time: 16:28

Flue Gas Concentration Measurement

Calibration Gas Values: Span Gas CO_2 (%): 16.93 CO (%): 4.33
Mid Gas CO_2 (%): 10.00 CO (%): 2.51

Calibration Results:

	Pre Test			Post Test		
	Zero	Span	Mid	Zero	Span	Mid
Time	10:14	10:15	10:16	11/29 6:44	11/29 6:45	11/29 6:47
CO_2	0.02	17.04	10.14	0.08	17.03	10.15
CO	0.018	4.340	2.545	0.050	4.326	2.515

Flue Gas Probe Leak Check: Initial: No Leakage Final: No Leakage

Technician Signature: Date: 11/29/23

ASTM E2780 Wood Heater Run Sheets

Client: FPI Job Number: 23-229 Tracking #: 169
Model: I3000 Run Number: 2 Test Date: 11/28/23

Test Fuel Front/Side View

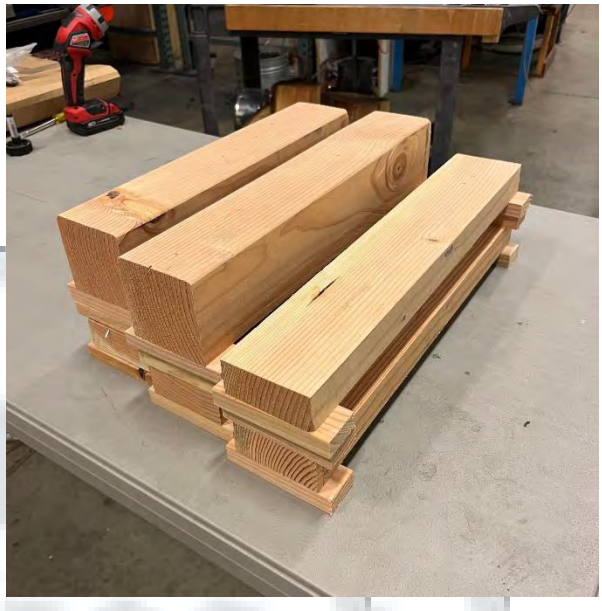

Test Fuel Iso View

Test Fuel Loaded in Stove

Air Setting

Technician Signature: Date: 11/29/23

WOOD STOVE TEST DATA PACKET
ASTM E2780/E2515

Run 3 Data Summary

Client:	FPI
Model:	I3000
Job #:	23-229
Tracking #:	169
Test Date:	11/29/2023

1/29/2024

Techician Signature Date

TEST RESULTS - ASTM E2780 / ASTM E2515

Client: FPI
Model: I3000
Run #: 3

Job #: 23-229
Tracking #: 169
Technician: AK
Date: 11/29/2023

Burn Rate (kg/hr):	1.64

	Ambient Sample	Sample Train A	Sample Train B	1st Hour Filter
Total Sample Volume (ft^3)	26.119	41.999	41.965	8.774
Average Gas Velocity in Dilution Tunnel (ft/sec)	7.7			
Average Gas Flow Rate in Dilution Tunnel (dscf/hr)	20629.3			
Average Gas Meter Temperature (°F)	65.1	89.1	88.4	73.9
Total Sample Volume (dscf)	26.388	40.900	40.928	8.808
Average Tunnel Temperature (°F)	85.6			
Total Time of Test (min)	249			
Total Particulate Catch (mg)	0.0	1.8	1.9	0.8
Particulate Concentration, dry-standard (g/dscf)	0.0000000	0.0000440	0.0000464	0.0000908
Total PM Emissions (g)	0.00	3.77	3.97	1.87
Particulate Emission Rate (g/hr)	0.00	0.91	0.96	1.87
Emissions Factor (g/kg)	-	0.55	0.58	-
Difference from Average Total Particulate Emissions (g)	-	0.10	0.10	-
Difference from Average Total Particulate Emissions (%)	-	2.7%	2.7%	
Difference from Average Emissions Factor (g/kg)	-	0.02	0.02	-

Final Average Results	
Total Particulate Emissions (g)	3.87
Particulate Emission Rate (g/hr)	0.93
Emissions Factor (g/kg)	0.57
HHV Efficiency (%)	78.4%
LHV Efficiency (%)	84.7%
CO Emissions (g/min)	0.42

Quality Checks	Requirement	Observed	Result
Dual Train Precision	Each train within 7.5% of average emissions (in grams), or emission factors within 0.5 g/kg	See Above	OK
Filter Temps	<90 °F	75.0	OK
Face Velocity	< 30 ft/min	9.5	OK
Leakage Rate	Less than 4% of average sample rate	0 cfm	OK
Ambient Temp	55-90 °F	Min:61.9/Max:66.3	OK
Negative Probe Weight Evaluation	<5% of Total Catch	Probe Catch Not Negative	OK
Pro-Rate Variation	90% of readings between 90-110%; none greater than 120% or less than 80%	See Data Tabs	OK
Stove Surface ΔT	<126°F	57.5	OK

B415.1 Efficiency Results

Manufacturer:	FPI
Model:	I3000
Date:	11/29/23
Run:	3
Control #:	23-229
Test Duration:	249
Output Category:	3

Test Results in Accordance with CSA B415.1-09

	HHV Basis	LHV Basis
Overall Efficiency	78.4%	84.7%
Combustion Efficiency	99.1%	99.1%
Heat Transfer Efficiency	79.1%	85.5%

Output Rate (kJ/h)	25,356	24,053	**(Btu/h)**
Burn Rate (kg/h)	1.63	3.60	**(lb/h)**
Input (kJ/h)	32,341	30,678	**(Btu/h)**

Test Load Weight (dry kg)	6.78	14.93	**dry lb**
MC wet (%)	16.91		
MC dry (%)	20.34		
Particulate (g)	3.87		
CO (g)	104		
Test Duration (h)	4.15		

Emissions	Particulate	CO
g/MJ Output	0.04	0.99
g/kg Dry Fuel	0.57	15.35
g/h	0.93	25.06
g/min	0.02	0.42
lb/MM Btu Output	0.09	2.30

Air/Fuel Ratio (A/F)	12.71

VERSION: **2.4** **4/15/2010**

WOODSTOVE FUEL DATA - ASTM E2780

Client: FPI
Model: I3000
Run #: 3

Job #: 23-229
Tracking #: 169
Technician: AK
Date: 11/29/2023

Preburn Fuel Information						
Size	Length (in)	Moisture Content (% DB)		Size	Length (in)	Moisture Content (% DB)
2x4	17.00	23.9		2x4	20.00	20.9
2x4	17.00	20.8				
2x4	17.00	23.0				
2x4	17.00	20.5				
2x4	17.00	21.7				
2x4	17.00	24.5				
2x4	20.00	20.5				
2x4	20.00	19.6				
Total Fuel Weight (lbs):		17.17		Average Moisture (%DB):		21.7

Firebox Volume (ft^3):	2.75
Total 2x4 Crib Weight, with spacers (lbs):	9.39
Total 4x4 Crib Weight, with spacers (lbs):	8.64
Total Wet Fuel Weight, with spacers (lbs):	18.03

Coal Bed Range (20-25%):
Min (lbs): 3.61
Max (lbs): 4.51

Test Fuel Information						
Size	Length (in)	Weight (lbs)	Moisture Content (%DB)			Dry Weight (lbs)
2x4	20.00	2.07	19.4	19.1	19.2	1.74
2x4	20.00	2.16	21.7	19.4	21.3	1.79
2x4	18.50	2.03	19.6	20.2	19.1	1.70
4x4	18.50	4.48	19.7	20.2	22.0	3.71
2x4	17.00	2.01	21.2	19.9	20.4	1.67
4x4	17.00	3.81	20.1	20.3	23.4	3.14
					Total Dry Weight, no spacers (lbs):	13.74
					Total Dry Weight, with spacers (lbs):	15.02

Spacer Moisture Readings (%DB)							
13.7	16.3	16.3					
15.3	15.7	14.1					
13.7	15.4						
13.7	15.2						
16.2	13.4						
13.4	16.8						
14.4	16.7						
16.1	15.5						

Quality Checks	Requirement	Observed	Result
Fuel Density	25 - 36 (lbs/ft^3, DB)	28.6	OK
Loading Density	6.3 - 7.7 (lbs/ft^3, WB)	6.56	OK
2x4 Fuel Mix	35 - 65 % of total weight	52%	OK

DILUTION TUNNEL & MISC. DATA - ASTM E2780 / E2515

Client:	FPI	Job #:	23-229
Model:	I3000	Tracking #:	169
Run #:	3	Technician:	AK
Test Start Time:	12:18	Date:	11/29/2023

Total Sampling Time (min):	249	
Recording Interval (min):	1	
Meter Box γ Factor:	1.004	(A)
Meter Box γ Factor:	1.004	(B)
Meter Box γ Factor:	1.011	(C)
Meter Box γ Factor:	1.003	(Ambient)
Induced Draft Check (in. H_2O):	0	
Smoke Capture Check (%):	100%	
Date Flue Pipe Last Cleaned:	11/13/2023	
Test Fuel Scale Audit (lbs)	10.00	
Platform Scale Audit (lbs)	10.0	

	Pre-Test	Post Test	Avg.
Barometric Pressure (in. Hg)	29.99	29.98	29.99
Relative Humidity (%)	20.9	17.2	
Room Air Velocity (ft/min)	<50	<50	
Pitot Tube Leak Check	0	0	
Ambient Sample Volume:		26.119	ft^3

Sample Train Leak Checks

	Pre-test	Post-test			
(A)	0.000	0.000	cfm @	-5	in. Hg
(B)	0.000	0.000	cfm @	-5	in. Hg
(C)	0.000	0.000	cfm @	-5	in. Hg
(Ambient)	0.000	0.000	cfm @	-11	in. Hg

DILUTION TUNNEL FLOW

Traverse Data

Point	dP (in H_2O)	Temp (°F)
1	0.008	85
2	0.014	85
3	0.014	85
4	0.016	85
5	0.016	84
6	0.010	84
7	0.010	84
8	0.010	84
9	0.014	84
10	0.018	84
11	0.018	84
12	0.012	84
Center	0.016	84

Static Pressure: -0.110 in. H_2O

Dilution Tunnel H_2O:	2.00	percent
Tunnel Diameter:	12	inches
Pitot Tube Cp:	0.99	[unitless]
Dilution Tunnel MW(dry):	29.00	lb/lb-mole
Dilution Tunnel MW(wet):	28.78	lb/lb-mole
Tunnel Area:	0.7854	ft^2
V_{strav}:	7.70	ft/sec
V_{scent}:	8.50	ft/sec
F_p:	0.906	[ratio]
Initial Tunnel Flow:	345.8	scf/min

TEST FUEL PROPERTIES

Fuel Load Configuration

Firebox Front

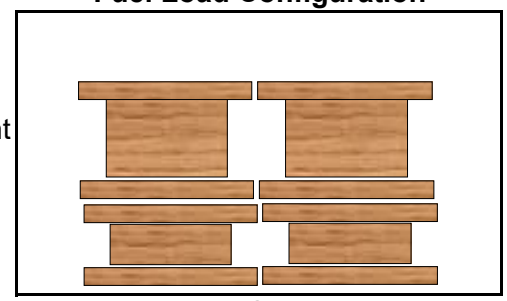

Firebox Back

Firebox Side View

Actual Fuel Used Properties

Fuel Type:	D. Fir
HHV (kJ/kg)	19,810
%C	48.73
%H	6.87
%O	43.9
%Ash	0.5
MC (%DB)	20.3

WOODSTOVE PREBURN DATA - ASTM E2780

Client: FPI
Model: I3000
Run #: 3

Job #: 23-229
Tracking #: 169
Technician: AK
Date: 11/29/2023

Recording Interval (min): 1
Run Time (min): 60

			Temperatures (°F)							
Elapsed Time (min)	Scale Reading (lbs)	Flue Draft (in H_2O)	FB Left	FB Right	FB Back	FB Top	FB Bottom	Stove Surface Average	Flue	Ambient
0	9.47	-0.084	363	429	245	781	443	452.1	474	67
1	9.29	-0.082	364	432	246	811	440	458.7	446	67
2	9.13	-0.081	366	435	247	809	432	457.8	431	66
3	8.97	-0.081	367	437	244	803	423	454.9	424	67
4	8.83	-0.078	369	440	245	796	412	452.5	417	66
5	8.70	-0.080	371	442	245	788	402	449.5	413	66
6	8.57	-0.079	372	444	244	780	392	446.3	408	66
7	8.46	-0.078	372	445	243	771	382	442.7	402	66
8	8.34	-0.078	374	446	242	764	373	439.6	398	66
9	8.22	-0.078	374	446	242	755	365	436.2	395	66
10	8.10	-0.077	374	447	241	747	357	433.1	393	66
11	7.97	-0.077	374	447	238	741	350	429.9	390	66
12	7.86	-0.075	375	447	238	735	344	427.6	390	66
13	7.74	-0.076	373	447	237	729	338	424.7	389	66
14	7.62	-0.076	374	447	236	724	332	422.7	386	66
15	7.52	-0.075	374	447	236	719	327	420.8	383	65
16	7.43	-0.076	373	447	235	713	323	418.3	379	66
17	7.33	-0.073	373	447	235	708	319	416.4	377	66
18	7.24	-0.073	373	448	233	704	315	414.5	375	66
19	7.16	-0.073	372	447	231	699	311	412.3	372	66
20	7.07	-0.073	372	447	232	695	308	410.7	371	66
21	6.99	-0.073	372	446	230	690	305	408.7	366	66
22	6.91	-0.072	372	446	230	686	302	407.1	364	66
23	6.84	-0.074	371	445	230	681	299	405.4	362	66
24	6.78	-0.071	371	444	229	678	297	403.7	358	66
25	6.71	-0.071	371	443	229	672	295	402.0	357	66
26	6.64	-0.070	371	442	228	667	294	400.1	355	66
27	6.58	-0.070	371	441	226	661	292	398.2	352	66
28	6.52	-0.069	371	439	226	657	291	396.6	349	66
29	6.46	-0.069	370	438	226	651	289	394.7	346	66
30	6.39	-0.068	370	436	225	645	288	392.9	346	66
31	6.35	-0.069	370	435	226	640	287	391.5	342	66
32	6.29	-0.067	370	433	224	634	286	389.5	340	66
33	6.25	-0.069	370	432	223	628	286	387.8	338	66
34	6.20	-0.066	370	431	222	623	285	386.1	337	66
35	6.15	-0.068	369	429	222	617	285	384.4	333	66
36	6.11	-0.066	369	428	222	611	284	382.8	332	66
37	6.06	-0.066	369	427	222	606	284	381.5	331	66
38	6.02	-0.065	369	426	222	602	284	380.4	329	66
39	5.98	-0.065	369	425	221	597	284	379.0	328	66
40	5.94	-0.066	369	424	222	591	284	377.9	325	66
41	5.90	-0.066	368	423	221	586	284	376.4	324	66
42	5.86	-0.061	368	422	221	580	284	375.0	321	66
43	4.96	-0.069	369	421	222	574	285	374.2	429	67
44	4.92	-0.066	369	421	221	566	286	372.5	358	66

WOODSTOVE PREBURN DATA - ASTM E2780

Client: FPI
Model: I3000
Run #: 3

Job #: 23-229
Tracking #: 169
Technician: AK
Date: 11/29/2023

Recording Interval (min): 1
Run Time (min): 60

			Temperatures (°F)							
Elapsed Time (min)	Scale Reading (lbs)	Flue Draft (in H_2O)	FB Left	FB Right	FB Back	FB Top	FB Bottom	Stove Surface Average	Flue	Ambient
45	4.90	-0.064	370	420	221	559	286	371.2	333	66
46	4.86	-0.065	370	419	221	553	287	369.9	323	66
47	4.84	-0.065	371	418	221	547	288	368.9	318	66
48	4.81	-0.063	371	417	221	542	288	367.8	314	66
49	4.78	-0.062	371	416	220	535	289	366.1	311	66
50	4.75	-0.062	371	415	220	530	289	365.0	308	66
51	4.72	-0.060	371	414	219	525	289	363.6	306	66
52	4.69	-0.061	371	412	220	519	289	362.5	303	66
53	4.67	-0.060	371	411	220	514	290	361.1	302	66
54	4.65	-0.059	371	410	219	509	290	359.6	300	66
55	4.62	-0.060	371	409	218	504	289	358.1	297	66
56	4.59	-0.060	370	408	219	499	289	357.0	295	66
57	4.56	-0.059	370	406	219	494	289	355.5	294	66
58	4.54	-0.059	369	405	219	490	289	354.4	292	66
59	4.51	-0.058	369	404	218	485	289	352.8	291	65
60	4.49	-0.059	368	402	218	481	289	351.5	290	66

BOX A TEST DATA - ASTM E2780 / ASTM E2515

Client: FPI
Model: I3000
Run #: 3

Job #: 23-229
Tracking #: 169
Technician: AK
Date: 11/29/2023

	Particulate Sampling Data							Fuel Weight (lb)		Temperature Data (°F)			
Elapsed Time (min)	Gas Meter (ft^3)	Sample Rate (cfm)	Dilution Tunnel dP (in H_2O)	Orifice dH (in H_2O)	Meter Temp (°F)	Meter Vacuum (in Hg)	Pro. Rate (%)	Scale Reading	Weight Change	Dilution Tunnel	Flue	Filter	Ambient
0	0.003		0.015	0.67	70	0.7		17.97		94	352	69	66
1	0.148	0.145	0.015	2.34	70	0.8	-	17.95	-0.02	100	369	71	66
2	0.297	0.149	0.015	2.37	70	0.9	-	17.79	-0.16	95	344	71	66
3	0.448	0.151	0.015	2.39	70	0.9	-	17.60	-0.19	94	362	71	66
4	0.602	0.154	0.016	2.41	70	0.9	-	17.40	-0.20	95	389	72	66
5	0.755	0.153	0.015	2.43	70	0.9	-	17.20	-0.20	96	407	72	66
6	0.911	0.156	0.016	2.45	70	0.9	-	17.06	-0.14	94	385	72	66
7	1.063	0.152	0.015	2.46	70	0.9	-	16.92	-0.14	93	375	72	66
8	1.220	0.157	0.017	2.48	70	0.9	-	16.78	-0.14	92	370	73	66
9	1.369	0.149	0.016	2.49	70	0.9	-	16.63	-0.15	92	368	73	66
10	1.527	0.158	0.016	2.51	71	0.9	95	16.47	-0.16	92	372	73	66
11	1.679	0.152	0.016	2.51	71	0.9	-	16.31	-0.16	92	376	73	66
12	1.842	0.163	0.015	2.52	71	0.9	-	16.16	-0.15	93	377	73	66
13	1.993	0.151	0.015	2.55	71	0.9	-	16.01	-0.15	93	378	74	66
14	2.153	0.160	0.016	2.55	71	0.9	-	15.85	-0.16	93	380	74	66
15	2.313	0.160	0.015	2.57	72	0.9	-	15.70	-0.15	93	380	74	66
16	2.468	0.155	0.016	2.58	72	0.9	-	15.52	-0.18	92	379	74	66
17	2.626	0.158	0.016	2.60	72	0.9	-	15.36	-0.16	91	381	74	66
18	2.784	0.158	0.016	2.61	72	1.0	-	15.20	-0.16	91	381	74	66
19	2.943	0.159	0.016	2.61	73	0.9	-	15.07	-0.13	91	381	74	66
20	3.099	0.156	0.016	2.63	73	0.9	96	14.93	-0.14	91	379	74	66
21	3.262	0.163	0.016	2.64	73	0.9	-	14.78	-0.15	91	378	74	66
22	3.423	0.161	0.016	2.64	73	0.9	-	14.64	-0.14	91	379	74	66
23	3.581	0.158	0.015	2.65	74	0.9	-	14.47	-0.17	91	380	75	66
24	3.744	0.163	0.016	2.66	74	1.0	-	14.30	-0.17	91	381	75	66
25	3.900	0.156	0.016	2.67	74	0.9	-	14.14	-0.16	91	383	75	66
26	4.065	0.165	0.016	2.68	75	1.0	-	13.98	-0.16	91	382	75	66
27	4.227	0.162	0.015	2.68	75	0.9	-	13.83	-0.15	91	382	75	66
28	4.384	0.157	0.014	2.70	75	0.9	-	13.68	-0.15	91	383	75	66
29	4.549	0.165	0.016	2.70	76	0.9	-	13.53	-0.15	91	380	75	66
30	4.713	0.164	0.015	2.70	76	1.0	100	13.38	-0.15	91	379	75	66
31	4.872	0.159	0.016	2.71	76	1.0	-	13.24	-0.14	90	380	75	66

BOX A TEST DATA - ASTM E2780 / ASTM E2515

Client: FPI
Model: I3000
Run #: 3

Job #: 23-229
Tracking #: 169
Technician: AK
Date: 11/29/2023

	Particulate Sampling Data							Fuel Weight (lb)		Temperature Data (°F)			
Elapsed Time (min)	Gas Meter (ft^3)	Sample Rate (cfm)	Dilution Tunnel dP (in H_2O)	Orifice dH (in H_2O)	Meter Temp (°F)	Meter Vacuum (in Hg)	Pro. Rate (%)	Scale Reading	Weight Change	Dilution Tunnel	Flue	Filter	Ambient
32	5.038	0.166	0.016	2.72	77	0.9	-	13.08	-0.16	90	377	75	66
33	5.199	0.161	0.016	2.71	77	1.0	-	12.93	-0.15	91	377	75	66
34	5.362	0.163	0.016	2.73	77	0.9	-	12.76	-0.17	91	382	75	66
35	5.527	0.165	0.016	2.74	78	0.9	-	12.59	-0.17	91	381	75	66
36	5.689	0.162	0.016	2.75	78	1.0	-	12.43	-0.16	91	382	75	66
37	5.853	0.164	0.016	2.76	78	0.9	-	12.26	-0.17	91	382	75	66
38	6.019	0.166	0.015	2.75	79	0.9	-	12.09	-0.17	91	383	75	66
39	6.180	0.161	0.016	2.75	79	1.0	-	11.95	-0.14	91	380	75	66
40	6.345	0.165	0.016	2.75	79	1.0	100	11.80	-0.15	90	377	75	66
41	6.511	0.166	0.015	2.76	80	0.9	-	11.66	-0.14	90	376	75	66
42	6.672	0.161	0.016	2.76	80	1.0	-	11.53	-0.13	90	374	75	66
43	6.841	0.169	0.015	2.77	80	1.0	-	11.40	-0.13	90	372	75	66
44	7.004	0.163	0.016	2.77	81	1.0	-	11.28	-0.12	90	370	75	66
45	7.167	0.163	0.016	2.77	81	0.9	-	11.16	-0.12	90	368	75	66
46	7.336	0.169	0.016	2.78	81	1.0	-	11.03	-0.13	89	367	75	66
47	7.496	0.160	0.015	2.79	81	1.0	-	10.91	-0.12	89	367	75	66
48	7.664	0.168	0.016	2.79	82	0.9	-	10.78	-0.13	89	365	75	65
49	7.832	0.168	0.016	2.79	82	0.9	-	10.67	-0.11	89	365	75	66
50	7.996	0.164	0.016	2.80	82	0.9	99	10.54	-0.13	89	365	75	66
51	8.162	0.166	0.016	2.80	83	1.0	-	10.42	-0.12	89	366	75	66
52	8.330	0.168	0.016	2.80	83	1.0	-	10.30	-0.12	89	367	75	66
53	8.494	0.164	0.016	2.81	83	1.0	-	10.17	-0.13	89	365	75	66
54	8.661	0.167	0.016	2.81	83	1.0	-	10.05	-0.12	89	364	75	66
55	8.830	0.169	0.016	2.81	84	1.0	-	9.93	-0.12	89	366	75	65
56	8.994	0.164	0.015	2.83	84	1.0	-	9.81	-0.12	89	365	75	66
57	9.161	0.167	0.016	2.82	84	1.0	-	9.70	-0.11	89	365	75	66
58	9.330	0.169	0.016	2.82	84	1.0	-	9.57	-0.13	89	365	75	65
59	9.494	0.164	0.016	2.82	85	1.0	-	9.46	-0.11	88	365	75	65
60	9.662	0.168	0.016	2.83	85	1.0	100	9.35	-0.11	88	364	75	65
61	9.831	0.169	0.016	2.83	85	1.0	-	9.24	-0.11	88	364	75	65
62	9.996	0.165	0.016	2.84	85	1.0	-	9.14	-0.10	88	363	75	65
63	10.163	0.167	0.016	2.84	86	1.0	-	9.05	-0.09	88	360	75	65

BOX A TEST DATA - ASTM E2780 / ASTM E2515

Client: FPI
Model: I3000
Run #: 3

Job #: 23-229
Tracking #: 169
Technician: AK
Date: 11/29/2023

	Particulate Sampling Data							Fuel Weight (lb)		Temperature Data (°F)			
Elapsed Time (min)	Gas Meter (ft^3)	Sample Rate (cfm)	Dilution Tunnel dP (in H_2O)	Orifice dH (in H_2O)	Meter Temp (°F)	Meter Vacuum (in Hg)	Pro. Rate (%)	Scale Reading	Weight Change	Dilution Tunnel	Flue	Filter	Ambient
64	10.333	0.170	0.016	2.85	86	1.0	-	8.96	-0.09	88	358	75	65
65	10.499	0.166	0.016	2.84	86	1.0	-	8.87	-0.09	88	356	75	65
66	10.665	0.166	0.016	2.85	86	1.0	-	8.78	-0.09	88	355	75	65
67	10.837	0.172	0.016	2.85	86	1.0	-	8.70	-0.08	87	354	75	65
68	11.004	0.167	0.016	2.84	87	1.0	-	8.62	-0.08	87	351	75	65
69	11.169	0.165	0.016	2.84	87	1.0	-	8.53	-0.09	87	352	74	65
70	11.340	0.171	0.016	2.84	87	1.0	100	8.45	-0.08	87	354	74	65
71	11.509	0.169	0.016	2.85	87	1.0	-	8.36	-0.09	87	354	74	65
72	11.674	0.165	0.015	2.86	87	1.0	-	8.27	-0.09	87	353	74	65
73	11.847	0.173	0.016	2.86	88	1.0	-	8.18	-0.09	87	355	74	65
74	12.017	0.170	0.016	2.86	88	0.9	-	8.08	-0.10	87	355	74	65
75	12.184	0.167	0.016	2.86	88	1.0	-	7.99	-0.09	87	357	74	66
76	12.353	0.169	0.016	2.87	88	1.0	-	7.89	-0.10	87	356	74	65
77	12.520	0.167	0.015	2.86	88	1.0	-	7.79	-0.10	87	356	74	65
78	12.689	0.169	0.016	2.86	88	1.0	-	7.69	-0.10	88	358	74	65
79	12.859	0.170	0.016	2.87	89	1.0	-	7.58	-0.11	87	357	74	65
80	13.027	0.168	0.016	2.87	89	1.0	100	7.48	-0.10	87	358	74	65
81	13.197	0.170	0.016	2.87	89	1.0	-	7.38	-0.10	88	359	74	65
82	13.365	0.168	0.016	2.87	89	1.0	-	7.27	-0.11	88	359	74	65
83	13.537	0.172	0.015	2.88	89	1.0	-	7.16	-0.11	88	359	74	65
84	13.703	0.166	0.016	2.88	89	1.0	-	7.06	-0.10	87	360	74	65
85	13.869	0.166	0.016	2.88	90	1.0	-	6.95	-0.11	87	360	74	65
86	14.043	0.174	0.016	2.87	90	1.0	-	6.84	-0.11	87	358	74	65
87	14.212	0.169	0.016	2.87	90	1.0	-	6.75	-0.09	87	358	74	65
88	14.382	0.170	0.016	2.88	90	1.0	-	6.65	-0.10	87	359	74	65
89	14.549	0.167	0.016	2.88	90	1.0	-	6.55	-0.10	87	356	74	65
90	14.723	0.174	0.016	2.87	90	1.0	100	6.45	-0.10	87	356	74	65
91	14.891	0.168	0.016	2.89	90	1.0	-	6.35	-0.10	87	356	74	65
92	15.060	0.169	0.016	2.89	90	1.0	-	6.26	-0.09	87	355	74	65
93	15.233	0.173	0.016	2.88	90	1.0	-	6.18	-0.08	87	353	74	65
94	15.402	0.169	0.015	2.88	91	1.0	-	6.09	-0.09	87	353	74	65
95	15.569	0.167	0.015	2.88	91	1.0	-	6.00	-0.09	87	352	74	65

BOX A TEST DATA - ASTM E2780 / ASTM E2515

Client: FPI
Model: I3000
Run #: 3

Job #: 23-229
Tracking #: 169
Technician: AK
Date: 11/29/2023

	Particulate Sampling Data							Fuel Weight (lb)		Temperature Data (°F)			
Elapsed Time (min)	Gas Meter (ft^3)	Sample Rate (cfm)	Dilution Tunnel dP (in H_2O)	Orifice dH (in H_2O)	Meter Temp (°F)	Meter Vacuum (in Hg)	Pro. Rate (%)	Scale Reading	Weight Change	Dilution Tunnel	Flue	Filter	Ambient
96	15.741	0.172	0.016	2.90	91	1.0	-	5.91	-0.09	87	352	74	65
97	15.912	0.171	0.016	2.89	91	1.0	-	5.82	-0.09	87	352	74	65
98	16.080	0.168	0.015	2.89	91	1.0	-	5.73	-0.09	87	352	74	65
99	16.251	0.171	0.015	2.89	91	1.0	-	5.64	-0.09	87	352	74	65
100	16.422	0.171	0.016	2.89	91	1.0	100	5.55	-0.09	87	353	74	65
101	16.590	0.168	0.016	2.89	91	1.0	-	5.47	-0.08	87	353	74	65
102	16.760	0.170	0.016	2.89	91	1.0	-	5.37	-0.10	87	351	74	65
103	16.934	0.174	0.015	2.89	92	1.0	-	5.30	-0.07	87	352	74	65
104	17.101	0.167	0.016	2.89	92	1.0	-	5.21	-0.09	87	353	74	65
105	17.268	0.167	0.016	2.90	92	1.0	-	5.13	-0.08	86	351	74	65
106	17.440	0.172	0.016	2.89	92	1.0	-	5.06	-0.07	86	352	74	65
107	17.615	0.175	0.016	2.90	92	1.0	-	4.98	-0.08	86	349	74	65
108	17.781	0.166	0.016	2.90	92	1.0	-	4.90	-0.08	86	348	74	65
109	17.955	0.174	0.016	2.90	92	1.0	-	4.83	-0.07	86	347	74	65
110	18.128	0.173	0.016	2.91	92	1.0	100	4.76	-0.07	86	347	74	65
111	18.293	0.165	0.016	2.90	92	1.0	-	4.68	-0.08	86	346	74	65
112	18.462	0.169	0.016	2.90	92	1.0	-	4.61	-0.07	86	346	74	65
113	18.635	0.173	0.016	2.90	92	1.0	-	4.54	-0.07	86	343	74	65
114	18.808	0.173	0.016	2.91	92	1.0	-	4.47	-0.07	86	343	74	65
115	18.975	0.167	0.016	2.90	93	1.0	-	4.39	-0.08	86	343	74	65
116	19.143	0.168	0.015	2.90	93	1.0	-	4.32	-0.07	86	343	74	65
117	19.319	0.176	0.016	2.90	93	1.0	-	4.24	-0.08	86	343	74	65
118	19.487	0.168	0.016	2.91	93	1.0	-	4.17	-0.07	86	342	74	65
119	19.658	0.171	0.015	2.90	93	1.0	-	4.09	-0.08	86	343	74	65
120	19.834	0.176	0.015	2.91	93	1.0	102	4.02	-0.07	86	342	74	65
121	20.002	0.168	0.016	2.90	93	1.0	-	3.94	-0.08	86	341	74	65
122	20.170	0.168	0.016	2.90	93	1.0	-	3.88	-0.06	85	341	73	65
123	20.342	0.172	0.016	2.89	93	1.0	-	3.81	-0.07	85	340	73	65
124	20.515	0.173	0.016	2.91	93	1.0	-	3.76	-0.05	85	338	73	65
125	20.683	0.168	0.016	2.90	93	1.0	-	3.70	-0.06	85	336	73	65
126	20.855	0.172	0.016	2.91	93	1.0	-	3.64	-0.06	85	334	73	65
127	21.031	0.176	0.016	2.92	93	1.0	-	3.58	-0.06	85	333	73	65

BOX A TEST DATA - ASTM E2780 / ASTM E2515

Client: FPI
Model: I3000
Run #: 3

Job #: 23-229
Tracking #: 169
Technician: AK
Date: 11/29/2023

	Particulate Sampling Data							Fuel Weight (lb)		Temperature Data (°F)			
Elapsed Time (min)	Gas Meter (ft^3)	Sample Rate (cfm)	Dilution Tunnel dP (in H_2O)	Orifice dH (in H_2O)	Meter Temp (°F)	Meter Vacuum (in Hg)	Pro. Rate (%)	Scale Reading	Weight Change	Dilution Tunnel	Flue	Filter	Ambient
128	21.202	0.171	0.016	2.89	93	1.0	-	3.53	-0.05	85	330	73	65
129	21.366	0.164	0.016	2.91	93	1.0	-	3.48	-0.05	85	329	73	65
130	21.537	0.171	0.016	2.90	93	1.0	101	3.42	-0.06	84	328	73	65
131	21.712	0.175	0.016	2.92	93	1.0	-	3.36	-0.06	84	328	73	65
132	21.880	0.168	0.015	2.91	93	1.0	-	3.31	-0.05	84	327	73	65
133	22.053	0.173	0.016	2.92	93	1.0	-	3.25	-0.06	84	326	73	65
134	22.226	0.173	0.015	2.90	94	1.0	-	3.19	-0.06	84	327	73	65
135	22.396	0.170	0.016	2.91	94	1.0	-	3.13	-0.06	84	326	73	65
136	22.564	0.168	0.016	2.92	94	1.0	-	3.07	-0.06	84	326	73	65
137	22.737	0.173	0.016	2.91	94	1.0	-	3.02	-0.05	84	325	73	65
138	22.910	0.173	0.016	2.91	94	1.0	-	2.97	-0.05	84	323	73	65
139	23.079	0.169	0.015	2.93	94	1.0	-	2.92	-0.05	84	323	73	65
140	23.251	0.172	0.016	2.92	94	1.0	100	2.87	-0.05	84	321	73	65
141	23.425	0.174	0.016	2.92	94	1.0	-	2.83	-0.04	84	321	73	65
142	23.595	0.170	0.016	2.91	94	1.0	-	2.79	-0.04	84	319	73	65
143	23.763	0.168	0.016	2.92	94	1.0	-	2.76	-0.03	84	316	73	65
144	23.937	0.174	0.016	2.91	94	1.0	-	2.73	-0.03	84	313	73	65
145	24.110	0.173	0.016	2.93	94	1.0	-	2.68	-0.05	84	311	73	65
146	24.279	0.169	0.016	2.92	94	1.0	-	2.66	-0.02	84	308	73	65
147	24.451	0.172	0.016	2.92	94	1.0	-	2.62	-0.04	84	306	73	65
148	24.624	0.173	0.016	2.91	94	1.0	-	2.60	-0.02	84	305	73	65
149	24.795	0.171	0.016	2.90	94	1.0	-	2.56	-0.04	84	303	73	65
150	24.964	0.169	0.017	2.91	94	1.0	99	2.54	-0.02	84	301	73	65
151	25.137	0.173	0.016	2.92	94	1.0	-	2.50	-0.04	84	299	73	65
152	25.310	0.173	0.015	2.92	94	1.0	-	2.48	-0.02	84	298	73	65
153	25.479	0.169	0.015	2.92	94	1.0	-	2.45	-0.03	84	296	73	65
154	25.652	0.173	0.016	2.92	94	1.0	-	2.42	-0.03	83	295	73	66
155	25.826	0.174	0.016	2.92	94	1.0	-	2.40	-0.02	83	295	73	65
156	25.997	0.171	0.015	2.92	94	1.0	-	2.36	-0.04	83	293	73	65
157	26.166	0.169	0.016	2.91	94	1.0	-	2.33	-0.03	83	291	73	65
158	26.338	0.172	0.016	2.91	94	1.0	-	2.30	-0.03	83	290	73	65
159	26.511	0.173	0.016	2.92	94	1.0	-	2.27	-0.03	83	289	73	65

BOX A TEST DATA - ASTM E2780 / ASTM E2515

Client: FPI
Model: I3000
Run #: 3

Job #: 23-229
Tracking #: 169
Technician: AK
Date: 11/29/2023

	Particulate Sampling Data							Fuel Weight (lb)		Temperature Data (°F)			
Elapsed Time (min)	Gas Meter (ft^3)	Sample Rate (cfm)	Dilution Tunnel dP (in H_2O)	Orifice dH (in H_2O)	Meter Temp (°F)	Meter Vacuum (in Hg)	Pro. Rate (%)	Scale Reading	Weight Change	Dilution Tunnel	Flue	Filter	Ambient
160	26.681	0.170	0.016	2.92	95	1.0	99	2.25	-0.02	83	289	73	65
161	26.852	0.171	0.016	2.93	95	1.0	-	2.22	-0.03	83	288	73	65
162	27.027	0.175	0.015	2.92	95	1.0	-	2.20	-0.02	83	286	73	65
163	27.199	0.172	0.017	2.92	95	1.0	-	2.17	-0.03	83	286	73	65
164	27.368	0.169	0.016	2.93	95	1.0	-	2.13	-0.04	83	287	73	65
165	27.540	0.172	0.017	2.91	95	1.0	-	2.10	-0.03	83	286	73	64
166	27.714	0.174	0.016	2.92	95	1.0	-	2.07	-0.03	83	285	73	63
167	27.883	0.169	0.017	2.92	95	1.0	-	2.04	-0.03	83	283	73	64
168	28.055	0.172	0.017	2.93	95	1.0	-	2.02	-0.02	83	283	73	63
169	28.229	0.174	0.017	2.93	95	1.0	-	1.98	-0.04	83	283	73	63
170	28.402	0.173	0.017	2.94	95	1.0	99	1.96	-0.02	83	282	73	62
171	28.571	0.169	0.016	2.92	95	1.0	-	1.93	-0.03	83	283	73	62
172	28.744	0.173	0.016	2.92	95	1.0	-	1.90	-0.03	83	282	73	62
173	28.918	0.174	0.016	2.93	95	1.0	-	1.88	-0.02	83	282	73	62
174	29.088	0.170	0.016	2.93	95	1.0	-	1.85	-0.03	83	281	73	62
175	29.258	0.170	0.017	2.92	95	1.0	-	1.82	-0.03	83	280	72	62
176	29.432	0.174	0.016	2.93	95	1.0	-	1.79	-0.03	83	280	72	62
177	29.605	0.173	0.016	2.93	95	1.0	-	1.76	-0.03	82	279	72	62
178	29.775	0.170	0.016	2.92	95	1.0	-	1.74	-0.02	82	278	72	62
179	29.948	0.173	0.016	2.93	95	1.0	-	1.71	-0.03	82	277	72	62
180	30.122	0.174	0.016	2.92	95	1.0	99	1.69	-0.02	82	277	72	63
181	30.294	0.172	0.015	2.92	95	1.0	-	1.66	-0.03	82	277	72	63
182	30.463	0.169	0.016	2.92	95	1.0	-	1.65	-0.01	82	275	72	64
183	30.636	0.173	0.016	2.93	95	1.0	-	1.61	-0.04	82	275	72	64
184	30.809	0.173	0.016	2.92	95	1.0	-	1.59	-0.02	82	273	72	64
185	30.979	0.170	0.016	2.93	95	1.0	-	1.56	-0.03	82	274	72	64
186	31.150	0.171	0.016	2.93	95	1.0	-	1.54	-0.02	82	274	72	64
187	31.327	0.177	0.016	2.92	95	1.0	-	1.51	-0.03	82	273	72	64
188	31.501	0.174	0.016	2.93	95	1.0	-	1.48	-0.03	82	273	72	64
189	31.671	0.170	0.016	2.94	95	1.0	-	1.45	-0.03	82	272	72	65
190	31.843	0.172	0.016	2.92	95	1.0	100	1.42	-0.03	82	273	72	65
191	32.017	0.174	0.016	2.93	95	1.0	-	1.40	-0.02	82	272	72	65

BOX A TEST DATA - ASTM E2780 / ASTM E2515

Client: FPI
Model: I3000
Run #: 3

Job #: 23-229
Tracking #: 169
Technician: AK
Date: 11/29/2023

	Particulate Sampling Data							Fuel Weight (lb)		Temperature Data (°F)			
Elapsed Time (min)	Gas Meter (ft^3)	Sample Rate (cfm)	Dilution Tunnel dP (in H_2O)	Orifice dH (in H_2O)	Meter Temp (°F)	Meter Vacuum (in Hg)	Pro. Rate (%)	Scale Reading	Weight Change	Dilution Tunnel	Flue	Filter	Ambient
192	32.187	0.170	0.016	2.92	95	1.0	-	1.37	-0.03	82	271	72	65
193	32.356	0.169	0.015	2.91	95	1.0	-	1.35	-0.02	82	272	72	65
194	32.530	0.174	0.016	2.92	95	1.0	-	1.32	-0.03	82	271	72	65
195	32.704	0.174	0.016	2.93	95	1.0	-	1.29	-0.03	82	270	72	65
196	32.874	0.170	0.016	2.93	95	1.0	-	1.27	-0.02	82	269	72	65
197	33.046	0.172	0.016	2.93	95	1.0	-	1.23	-0.04	82	270	72	65
198	33.220	0.174	0.016	2.92	95	1.0	-	1.21	-0.02	82	270	72	65
199	33.392	0.172	0.016	2.92	95	1.0	-	1.19	-0.02	82	269	72	65
200	33.561	0.169	0.016	2.92	95	1.0	100	1.16	-0.03	82	270	72	66
201	33.734	0.173	0.016	2.93	95	1.0	-	1.13	-0.03	82	270	72	66
202	33.907	0.173	0.016	2.92	95	1.0	-	1.10	-0.03	82	269	72	66
203	34.078	0.171	0.016	2.92	95	1.0	-	1.07	-0.03	82	267	73	66
204	34.249	0.171	0.016	2.92	95	1.0	-	1.05	-0.02	82	268	73	66
205	34.424	0.175	0.016	2.93	95	1.0	-	1.03	-0.02	82	267	73	66
206	34.597	0.173	0.016	2.93	95	1.0	-	1.00	-0.03	82	267	73	66
207	34.766	0.169	0.016	2.92	95	1.0	-	0.97	-0.03	82	266	73	66
208	34.939	0.173	0.016	2.93	95	1.0	-	0.95	-0.02	82	267	73	66
209	35.113	0.174	0.016	2.93	95	1.0	-	0.92	-0.03	82	266	73	66
210	35.283	0.170	0.016	2.92	95	1.0	100	0.89	-0.03	82	267	73	66
211	35.453	0.170	0.016	2.92	95	1.0	-	0.87	-0.02	81	265	73	66
212	35.628	0.175	0.016	2.93	95	1.0	-	0.85	-0.02	81	264	73	66
213	35.801	0.173	0.016	2.93	95	1.0	-	0.82	-0.03	81	264	73	66
214	35.971	0.170	0.016	2.93	96	1.0	-	0.80	-0.02	81	263	73	66
215	36.144	0.173	0.016	2.93	96	1.0	-	0.77	-0.03	81	262	73	66
216	36.318	0.174	0.016	2.92	96	1.0	-	0.74	-0.03	82	263	73	66
217	36.490	0.172	0.015	2.92	96	1.0	-	0.72	-0.02	81	262	73	66
218	36.659	0.169	0.016	2.92	96	1.0	-	0.70	-0.02	81	262	73	66
219	36.833	0.174	0.016	2.92	96	0.9	-	0.68	-0.02	81	261	73	66
220	37.006	0.173	0.016	2.92	96	1.0	100	0.65	-0.03	81	261	73	66
221	37.176	0.170	0.016	2.92	96	1.0	-	0.63	-0.02	81	261	73	66
222	37.347	0.171	0.016	2.93	96	1.0	-	0.61	-0.02	81	260	73	66
223	37.522	0.175	0.016	2.93	96	1.0	-	0.58	-0.03	81	261	73	66

BOX A TEST DATA - ASTM E2780 / ASTM E2515

Client: FPI
Model: I3000
Run #: 3

Job #: 23-229
Tracking #: 169
Technician: AK
Date: 11/29/2023

	Particulate Sampling Data							Fuel Weight (lb)		Temperature Data (°F)			
Elapsed Time (min)	Gas Meter (ft^3)	Sample Rate (cfm)	Dilution Tunnel dP (in H_2O)	Orifice dH (in H_2O)	Meter Temp (°F)	Meter Vacuum (in Hg)	Pro. Rate (%)	Scale Reading	Weight Change	Dilution Tunnel	Flue	Filter	Ambient
224	37.695	0.173	0.016	2.93	96	1.0	-	0.56	-0.02	81	260	73	66
225	37.865	0.170	0.016	2.93	96	1.0	-	0.54	-0.02	81	261	73	66
226	38.038	0.173	0.016	2.94	96	1.0	-	0.52	-0.02	81	261	73	66
227	38.212	0.174	0.016	2.92	96	1.0	-	0.50	-0.02	81	261	73	66
228	38.383	0.171	0.016	2.93	96	1.0	-	0.48	-0.02	81	261	73	66
229	38.552	0.169	0.015	2.93	96	1.0	-	0.45	-0.03	81	262	73	66
230	38.726	0.174	0.015	2.94	96	1.0	101	0.43	-0.02	81	261	73	66
231	38.901	0.175	0.016	2.93	96	1.0	-	0.41	-0.02	81	260	73	65
232	39.070	0.169	0.016	2.93	96	1.0	-	0.38	-0.03	81	259	73	66
233	39.243	0.173	0.015	2.94	96	1.0	-	0.35	-0.03	81	260	72	66
234	39.418	0.175	0.015	2.93	96	1.0	-	0.33	-0.02	81	260	73	66
235	39.590	0.172	0.016	2.92	96	1.0	-	0.31	-0.02	81	260	73	65
236	39.759	0.169	0.016	2.92	96	1.0	-	0.29	-0.02	81	260	72	66
237	39.932	0.173	0.015	2.93	96	1.0	-	0.27	-0.02	81	259	72	65
238	40.106	0.174	0.015	2.94	96	1.0	-	0.24	-0.03	81	260	72	66
239	40.276	0.170	0.016	2.93	96	1.0	-	0.21	-0.03	81	259	72	66
240	40.447	0.171	0.015	2.93	96	1.0	103	0.19	-0.02	81	259	72	66
241	40.622	0.175	0.016	2.93	96	1.0	-	0.17	-0.02	81	258	72	66
242	40.795	0.173	0.016	2.93	96	1.0	-	0.15	-0.02	81	258	73	66
243	40.966	0.171	0.016	2.94	96	1.0	-	0.13	-0.02	81	257	72	66
244	41.139	0.173	0.016	2.93	96	1.0	-	0.10	-0.03	81	255	72	66
245	41.313	0.174	0.016	2.93	96	1.0	-	0.08	-0.02	81	255	72	66
246	41.485	0.172	0.016	2.94	96	1.0	-	0.06	-0.02	81	254	72	66
247	41.654	0.169	0.016	2.93	96	1.0	-	0.05	-0.01	81	253	72	65
248	41.828	0.174	0.016	2.93	96	1.0	-	0.02	-0.03	80	254	72	66
249	42.002	0.174	0.016	2.94	96	1.0	100	0.00	-0.02	80	253	72	66
Avg/Tot	41.999	0.169	0.016	2.84	89.1	1.0	100			85.6	322.2	73.3	65.1

BOX B TEST DATA - ASTM E2780 / ASTM E2515

Client: FPI
Model: I3000
Run #: 3

Job #: 23-229
Tracking #: 169
Technician: AK
Date: 11/29/2023

	Particulate Sampling Data							Flue Gas Data		
Elapsed Time (min)	Gas Meter (ft^3)	Sample Rate (cfm)	Orifice dH (in H_2O)	Meter Temp (°F)	Meter Vacuum (in Hg)	Pro. Rate (%)	Filter (°F)	Flue Draft (in H_2O)	CO_2 (%)	CO (%)
0	0.000		0.91	70	1.5		71	-0.063	3.84	0.032
1	0.152	0.152	2.80	70	1.5	-	71	-0.068	2.43	0.055
2	0.317	0.165	2.80	70	1.9	-	72	-0.071	8.96	0.099
3	0.474	0.157	2.79	70	2.0	-	72	-0.074	11.23	0.192
4	0.639	0.165	2.80	70	1.6	-	72	-0.079	12.34	0.191
5	0.804	0.165	2.80	70	2.1	-	72	-0.083	12.60	0.176
6	0.963	0.159	2.79	70	1.6	-	72	-0.077	10.57	0.073
7	1.127	0.164	2.80	71	1.9	-	72	-0.077	9.84	0.039
8	1.290	0.163	2.80	71	2.0	-	73	-0.075	10.43	0.061
9	1.448	0.158	2.82	71	2.0	-	73	-0.076	10.76	0.059
10	1.612	0.164	2.81	71	2.1	101	73	-0.077	11.24	0.092
11	1.775	0.163	2.81	71	1.7	-	73	-0.076	11.36	0.095
12	1.938	0.163	2.81	71	1.6	-	73	-0.077	10.84	0.058
13	2.102	0.164	2.81	72	1.6	-	73	-0.077	10.51	0.064
14	2.266	0.164	2.81	72	2.0	-	73	-0.077	10.91	0.082
15	2.427	0.161	2.81	72	1.9	-	73	-0.077	10.94	0.078
16	2.593	0.166	2.81	72	2.1	-	74	-0.079	12.09	0.130
17	2.751	0.158	2.82	73	1.6	-	74	-0.075	12.03	0.172
18	2.918	0.167	2.82	73	1.6	-	74	-0.078	11.74	0.179
19	3.079	0.161	2.82	73	1.7	-	74	-0.077	10.58	0.076
20	3.241	0.162	2.83	73	1.7	100	74	-0.076	10.53	0.083
21	3.409	0.168	2.83	74	2.0	-	74	-0.076	10.88	0.087
22	3.573	0.164	2.82	74	1.6	-	74	-0.076	11.74	0.089
23	3.736	0.163	2.83	74	1.7	-	74	-0.078	12.64	0.150
24	3.900	0.164	2.83	75	1.8	-	74	-0.077	12.92	0.185
25	4.062	0.162	2.83	75	2.0	-	74	-0.077	12.93	0.228
26	4.228	0.166	2.84	75	2.1	-	74	-0.076	12.71	0.255
27	4.393	0.165	2.83	76	1.6	-	74	-0.076	12.38	0.243
28	4.556	0.163	2.84	76	2.0	-	74	-0.076	12.17	0.224
29	4.721	0.165	2.84	76	1.6	-	74	-0.076	11.97	0.221
30	4.886	0.165	2.84	77	2.0	102	74	-0.077	12.08	0.254
31	5.052	0.166	2.85	77	1.7	-	74	-0.076	11.93	0.240

BOX B TEST DATA - ASTM E2780 / ASTM E2515

Client: FPI
Model: I3000
Run #: 3

Job #: 23-229
Tracking #: 169
Technician: AK
Date: 11/29/2023

	Particulate Sampling Data							Flue Gas Data		
Elapsed Time (min)	Gas Meter (ft^3)	Sample Rate (cfm)	Orifice dH (in H_2O)	Meter Temp (°F)	Meter Vacuum (in Hg)	Pro. Rate (%)	Filter (°F)	Flue Draft (in H_2O)	CO_2 (%)	CO (%)
32	5.215	0.163	2.84	77	2.0	-	74	-0.076	12.38	0.296
33	5.381	0.166	2.85	78	1.8	-	74	-0.074	12.52	0.317
34	5.548	0.167	2.86	78	1.8	-	74	-0.077	12.56	0.702
35	5.711	0.163	2.85	78	1.8	-	74	-0.077	13.16	1.043
36	5.877	0.166	2.85	79	2.0	-	74	-0.076	13.12	0.682
37	6.044	0.167	2.86	79	1.8	-	74	-0.077	13.26	0.777
38	6.207	0.163	2.85	79	1.9	-	74	-0.076	13.06	0.724
39	6.373	0.166	2.84	80	2.0	-	74	-0.075	12.85	0.499
40	6.540	0.167	2.85	80	1.9	102	74	-0.076	12.92	0.308
41	6.704	0.164	2.85	80	2.0	-	74	-0.076	12.45	0.122
42	6.870	0.166	2.85	80	1.7	-	74	-0.075	11.94	0.083
43	7.037	0.167	2.86	81	1.7	-	74	-0.075	11.72	0.086
44	7.202	0.165	2.86	81	1.7	-	74	-0.073	11.81	0.112
45	7.369	0.167	2.86	81	1.9	-	74	-0.073	11.81	0.142
46	7.536	0.167	2.87	82	1.7	-	75	-0.073	11.77	0.127
47	7.698	0.162	2.87	82	1.6	-	75	-0.074	11.76	0.079
48	7.868	0.170	2.87	82	2.0	-	75	-0.073	12.02	0.120
49	8.035	0.167	2.86	82	1.9	-	74	-0.072	12.05	0.185
50	8.200	0.165	2.87	83	2.1	100	75	-0.071	12.01	0.192
51	8.368	0.168	2.87	83	1.8	-	74	-0.075	11.99	0.247
52	8.537	0.169	2.88	83	2.0	-	74	-0.072	11.69	0.343
53	8.701	0.164	2.87	83	2.0	-	75	-0.073	11.84	0.460
54	8.868	0.167	2.87	84	1.9	-	75	-0.072	11.92	0.313
55	9.038	0.170	2.88	84	2.0	-	75	-0.072	11.92	0.407
56	9.204	0.166	2.88	84	1.6	-	74	-0.073	11.96	0.142
57	9.370	0.166	2.88	84	1.6	-	74	-0.070	11.80	0.134
58	9.539	0.169	2.88	85	1.5	-	74	-0.072	11.99	0.251
59	9.707	0.168	2.89	85	2.1	-	74	-0.072	11.73	0.334
60	9.872	0.165	2.88	85	2.0	100	75	-0.072	11.70	0.198
61	10.041	0.169	2.88	85	1.6	-	75	-0.073	11.46	0.160
62	10.209	0.168	2.88	85	1.8	-	74	-0.072	11.24	0.158
63	10.375	0.166	2.89	86	2.0	-	74	-0.070	10.95	0.075

BOX B TEST DATA - ASTM E2780 / ASTM E2515

Client: FPI
Model: I3000
Run #: 3

Job #: 23-229
Tracking #: 169
Technician: AK
Date: 11/29/2023

	Particulate Sampling Data							Flue Gas Data		
Elapsed Time (min)	Gas Meter (ft^3)	Sample Rate (cfm)	Orifice dH (in H_2O)	Meter Temp (°F)	Meter Vacuum (in Hg)	Pro. Rate (%)	Filter (°F)	Flue Draft (in H_2O)	CO_2 (%)	CO (%)
64	10.544	0.169	2.88	86	1.9	-	74	-0.069	10.58	0.049
65	10.712	0.168	2.89	86	2.1	-	74	-0.073	10.29	0.046
66	10.877	0.165	2.89	86	2.1	-	74	-0.073	10.16	0.054
67	11.047	0.170	2.90	86	1.5	-	74	-0.070	10.00	0.051
68	11.216	0.169	2.90	87	2.0	-	74	-0.072	9.89	0.053
69	11.382	0.166	2.90	87	1.6	-	74	-0.071	10.14	0.069
70	11.550	0.168	2.90	87	2.1	100	74	-0.073	9.97	0.064
71	11.720	0.170	2.90	87	1.8	-	74	-0.074	10.13	0.062
72	11.888	0.168	2.90	87	1.9	-	74	-0.071	10.27	0.072
73	12.057	0.169	2.90	88	1.5	-	74	-0.073	10.45	0.070
74	12.227	0.170	2.90	88	1.6	-	74	-0.071	10.63	0.077
75	12.396	0.169	2.90	88	2.1	-	74	-0.071	10.87	0.076
76	12.562	0.166	2.90	88	1.5	-	74	-0.071	11.02	0.088
77	12.729	0.167	2.90	88	1.9	-	74	-0.075	10.93	0.097
78	12.902	0.173	2.91	89	1.6	-	74	-0.070	11.35	0.156
79	13.069	0.167	2.90	89	2.1	-	74	-0.073	11.40	0.275
80	13.234	0.165	2.90	89	2.1	100	74	-0.073	11.43	0.329
81	13.407	0.173	2.90	89	1.8	-	74	-0.073	11.60	0.201
82	13.576	0.169	2.91	89	1.8	-	74	-0.073	11.64	0.206
83	13.742	0.166	2.91	89	1.6	-	74	-0.073	11.91	0.191
84	13.909	0.167	2.90	89	2.0	-	74	-0.072	11.72	0.268
85	14.079	0.170	2.91	89	1.9	-	74	-0.072	11.66	0.218
86	14.248	0.169	2.90	90	1.9	-	74	-0.072	11.67	0.211
87	14.416	0.168	2.91	90	1.8	-	74	-0.070	11.55	0.139
88	14.589	0.173	2.90	90	1.6	-	74	-0.071	11.43	0.162
89	14.752	0.163	2.90	90	1.9	-	74	-0.071	11.39	0.195
90	14.923	0.171	2.90	90	2.0	100	74	-0.072	11.48	0.210
91	15.094	0.171	2.91	90	1.6	-	74	-0.070	11.31	0.158
92	15.264	0.170	2.91	90	1.6	-	74	-0.072	10.99	0.139
93	15.431	0.167	2.91	90	2.0	-	74	-0.071	10.96	0.063
94	15.601	0.170	2.90	90	1.7	-	74	-0.071	10.86	0.072
95	15.771	0.170	2.91	90	1.8	-	74	-0.072	10.87	0.075

BOX B TEST DATA - ASTM E2780 / ASTM E2515

Client: FPI
Model: I3000
Run #: 3

Job #: 23-229
Tracking #: 169
Technician: AK
Date: 11/29/2023

	Particulate Sampling Data							Flue Gas Data		
Elapsed Time (min)	Gas Meter (ft^3)	Sample Rate (cfm)	Orifice dH (in H_2O)	Meter Temp (°F)	Meter Vacuum (in Hg)	Pro. Rate (%)	Filter (°F)	Flue Draft (in H_2O)	CO_2 (%)	CO (%)
96	15.938	0.167	2.91	91	1.7	-	74	-0.071	11.06	0.093
97	16.107	0.169	2.91	91	1.5	-	74	-0.070	11.18	0.137
98	16.279	0.172	2.91	91	2.1	-	74	-0.070	11.15	0.126
99	16.447	0.168	2.91	91	1.7	-	74	-0.072	11.19	0.089
100	16.615	0.168	2.91	91	2.1	100	74	-0.073	11.09	0.089
101	16.785	0.170	2.91	91	2.0	-	74	-0.072	11.22	0.088
102	16.955	0.170	2.92	91	2.1	-	74	-0.072	10.63	0.100
103	17.122	0.167	2.91	91	2.0	-	74	-0.070	10.59	0.086
104	17.290	0.168	2.91	91	1.7	-	74	-0.072	10.51	0.086
105	17.461	0.171	2.92	91	1.9	-	74	-0.072	10.25	0.089
106	17.628	0.167	2.91	91	1.6	-	74	-0.073	10.19	0.093
107	17.800	0.172	2.91	91	1.6	-	74	-0.069	10.03	0.091
108	17.969	0.169	2.92	91	1.5	-	74	-0.071	10.06	0.088
109	18.141	0.172	2.92	91	1.5	-	74	-0.069	10.11	0.086
110	18.309	0.168	2.92	92	1.7	100	74	-0.070	10.02	0.079
111	18.477	0.168	2.92	92	1.7	-	74	-0.069	10.04	0.081
112	18.648	0.171	2.92	92	1.6	-	74	-0.070	10.02	0.068
113	18.814	0.166	2.91	92	1.6	-	74	-0.071	10.08	0.075
114	18.984	0.170	2.92	92	1.6	-	74	-0.069	9.97	0.076
115	19.156	0.172	2.92	92	1.8	-	74	-0.069	10.26	0.082
116	19.322	0.166	2.91	92	2.1	-	74	-0.071	10.36	0.079
117	19.493	0.171	2.92	92	1.6	-	74	-0.069	10.54	0.079
118	19.664	0.171	2.92	92	2.0	-	73	-0.069	10.44	0.071
119	19.834	0.170	2.92	92	1.7	-	73	-0.070	10.49	0.056
120	20.005	0.171	2.91	92	1.8	101	73	-0.069	10.68	0.069
121	20.172	0.167	2.91	92	1.6	-	73	-0.070	10.66	0.065
122	20.344	0.172	2.92	92	2.0	-	73	-0.068	10.37	0.065
123	20.513	0.169	2.92	92	2.1	-	73	-0.068	10.09	0.054
124	20.681	0.168	2.92	92	1.9	-	73	-0.069	9.86	0.049
125	20.852	0.171	2.92	92	1.6	-	73	-0.069	9.72	0.062
126	21.022	0.170	2.92	92	2.0	-	73	-0.071	9.52	0.055
127	21.193	0.171	2.92	92	1.7	-	73	-0.066	9.55	0.054

BOX B TEST DATA - ASTM E2780 / ASTM E2515

Client: FPI
Model: I3000
Run #: 3

Job #: 23-229
Tracking #: 169
Technician: AK
Date: 11/29/2023

	Particulate Sampling Data							Flue Gas Data		
Elapsed Time (min)	Gas Meter (ft^3)	Sample Rate (cfm)	Orifice dH (in H_2O)	Meter Temp (°F)	Meter Vacuum (in Hg)	Pro. Rate (%)	Filter (°F)	Flue Draft (in H_2O)	CO_2 (%)	CO (%)
128	21.363	0.170	2.92	92	2.1	-	73	-0.068	9.56	0.059
129	21.533	0.170	2.92	92	1.6	-	73	-0.066	9.52	0.054
130	21.698	0.165	2.92	92	2.0	101	73	-0.067	9.58	0.055
131	21.870	0.172	2.92	92	2.1	-	73	-0.066	9.55	0.052
132	22.040	0.170	2.92	92	1.6	-	73	-0.066	9.74	0.038
133	22.211	0.171	2.92	93	2.1	-	73	-0.068	9.91	0.029
134	22.379	0.168	2.93	92	1.9	-	73	-0.067	9.99	0.036
135	22.550	0.171	2.93	93	1.7	-	73	-0.066	10.06	0.038
136	22.722	0.172	2.93	93	1.8	-	73	-0.066	10.06	0.028
137	22.891	0.169	2.92	93	1.5	-	73	-0.066	9.97	0.025
138	23.059	0.168	2.92	93	1.6	-	73	-0.065	9.89	0.049
139	23.230	0.171	2.93	93	1.8	-	73	-0.063	9.41	0.066
140	23.401	0.171	2.92	93	2.1	100	73	-0.068	8.77	0.074
141	23.569	0.168	2.93	93	1.7	-	73	-0.066	8.31	0.064
142	23.739	0.170	2.92	93	1.7	-	73	-0.063	8.13	0.057
143	23.912	0.173	2.92	93	2.1	-	73	-0.064	7.88	0.060
144	24.081	0.169	2.92	93	1.7	-	73	-0.065	7.95	0.053
145	24.249	0.168	2.92	93	1.9	-	73	-0.063	7.95	0.057
146	24.421	0.172	2.92	93	2.0	-	73	-0.063	8.01	0.048
147	24.591	0.170	2.92	93	1.6	-	73	-0.063	8.03	0.051
148	24.759	0.168	2.93	93	2.1	-	73	-0.064	8.06	0.053
149	24.929	0.170	2.92	93	2.1	-	73	-0.062	8.03	0.055
150	25.102	0.173	2.93	93	1.7	98	73	-0.063	8.05	0.055
151	25.271	0.169	2.92	93	1.6	-	73	-0.062	7.97	0.059
152	25.440	0.169	2.93	93	1.7	-	73	-0.060	8.09	0.054
153	25.611	0.171	2.92	93	1.9	-	73	-0.061	8.10	0.051
154	25.782	0.171	2.92	93	1.9	-	73	-0.061	7.98	0.056
155	25.950	0.168	2.92	93	2.1	-	73	-0.061	7.97	0.055
156	26.120	0.170	2.92	93	1.9	-	73	-0.062	7.90	0.056
157	26.293	0.173	2.93	93	1.5	-	73	-0.061	7.90	0.058
158	26.463	0.170	2.93	93	2.1	-	73	-0.060	7.90	0.058
159	26.631	0.168	2.92	93	1.8	-	73	-0.061	7.94	0.064

BOX B TEST DATA - ASTM E2780 / ASTM E2515

Client: FPI
Model: I3000
Run #: 3

Job #: 23-229
Tracking #: 169
Technician: AK
Date: 11/29/2023

	Particulate Sampling Data							Flue Gas Data		
Elapsed Time (min)	Gas Meter (ft^3)	Sample Rate (cfm)	Orifice dH (in H_2O)	Meter Temp (°F)	Meter Vacuum (in Hg)	Pro. Rate (%)	Filter (°F)	Flue Draft (in H_2O)	CO_2 (%)	CO (%)
160	26.802	0.171	2.92	93	1.9	98	73	-0.061	7.83	0.060
161	26.973	0.171	2.93	93	2.1	-	73	-0.058	7.77	0.060
162	27.141	0.168	2.92	93	1.6	-	73	-0.061	7.80	0.060
163	27.312	0.171	2.93	93	1.6	-	73	-0.059	7.83	0.059
164	27.483	0.171	2.92	93	1.9	-	73	-0.058	7.79	0.053
165	27.654	0.171	2.92	93	1.6	-	73	-0.058	8.04	0.052
166	27.822	0.168	2.92	93	1.8	-	73	-0.060	7.96	0.052
167	27.994	0.172	2.92	94	2.1	-	73	-0.059	7.95	0.055
168	28.165	0.171	2.92	93	2.0	-	73	-0.058	7.91	0.058
169	28.332	0.167	2.92	93	2.0	-	73	-0.059	7.87	0.058
170	28.503	0.171	2.93	94	1.6	98	73	-0.059	7.79	0.056
171	28.674	0.171	2.93	94	1.5	-	73	-0.061	7.81	0.054
172	28.846	0.172	2.93	94	1.6	-	73	-0.059	7.83	0.056
173	29.014	0.168	2.93	94	1.8	-	73	-0.058	7.79	0.057
174	29.185	0.171	2.93	94	1.7	-	73	-0.057	7.86	0.058
175	29.357	0.172	2.93	94	2.1	-	73	-0.058	7.86	0.057
176	29.525	0.168	2.93	94	1.8	-	73	-0.056	7.82	0.054
177	29.695	0.170	2.92	94	1.8	-	73	-0.058	7.79	0.060
178	29.867	0.172	2.93	94	1.7	-	73	-0.059	7.76	0.061
179	30.038	0.171	2.93	94	1.7	-	73	-0.057	7.78	0.059
180	30.207	0.169	2.93	94	1.9	98	73	-0.058	7.76	0.056
181	30.378	0.171	2.93	94	1.6	-	73	-0.057	7.75	0.052
182	30.550	0.172	2.92	94	1.7	-	73	-0.057	7.90	0.053
183	30.719	0.169	2.93	94	2.1	-	73	-0.058	7.82	0.049
184	30.887	0.168	2.93	94	2.1	-	73	-0.056	7.89	0.054
185	31.059	0.172	2.92	94	1.6	-	73	-0.058	7.97	0.047
186	31.230	0.171	2.93	94	1.7	-	73	-0.056	8.06	0.036
187	31.402	0.172	2.93	93	2.0	-	73	-0.059	7.98	0.056
188	31.572	0.170	2.92	93	2.0	-	73	-0.056	8.01	0.052
189	31.745	0.173	2.93	93	2.0	-	73	-0.057	8.02	0.055
190	31.914	0.169	2.92	93	1.9	100	73	-0.057	7.99	0.055
191	32.083	0.169	2.93	93	1.8	-	73	-0.057	7.90	0.047

BOX B TEST DATA - ASTM E2780 / ASTM E2515

Client: FPI
Model: I3000
Run #: 3

Job #: 23-229
Tracking #: 169
Technician: AK
Date: 11/29/2023

	Particulate Sampling Data							Flue Gas Data		
Elapsed Time (min)	Gas Meter (ft^3)	Sample Rate (cfm)	Orifice dH (in H_2O)	Meter Temp (°F)	Meter Vacuum (in Hg)	Pro. Rate (%)	Filter (°F)	Flue Draft (in H_2O)	CO_2 (%)	CO (%)
192	32.254	0.171	2.93	93	2.0	-	73	-0.058	7.99	0.046
193	32.425	0.171	2.93	93	1.6	-	73	-0.056	7.98	0.053
194	32.593	0.168	2.93	93	1.6	-	73	-0.056	7.95	0.051
195	32.764	0.171	2.93	93	1.7	-	73	-0.058	7.96	0.048
196	32.936	0.172	2.93	93	1.6	-	73	-0.057	7.91	0.055
197	33.107	0.171	2.93	93	1.6	-	73	-0.054	7.99	0.045
198	33.275	0.168	2.92	93	1.8	-	73	-0.057	7.98	0.050
199	33.446	0.171	2.92	94	2.1	-	73	-0.058	7.97	0.044
200	33.618	0.172	2.93	94	2.1	99	73	-0.056	7.93	0.051
201	33.785	0.167	2.92	94	1.6	-	73	-0.056	7.95	0.047
202	33.956	0.171	2.92	94	1.8	-	73	-0.056	7.95	0.056
203	34.127	0.171	2.92	94	2.1	-	73	-0.056	7.91	0.043
204	34.298	0.171	2.93	94	2.0	-	73	-0.057	7.97	0.050
205	34.467	0.169	2.92	94	1.6	-	73	-0.059	7.83	0.046
206	34.638	0.171	2.92	94	1.8	-	73	-0.057	7.85	0.049
207	34.810	0.172	2.92	94	1.6	-	73	-0.057	7.76	0.047
208	34.978	0.168	2.93	94	1.8	-	73	-0.058	7.78	0.050
209	35.147	0.169	2.92	94	1.8	-	73	-0.054	7.76	0.048
210	35.320	0.173	2.93	94	1.7	99	73	-0.055	7.61	0.045
211	35.490	0.170	2.92	94	1.9	-	73	-0.055	7.52	0.047
212	35.659	0.169	2.93	94	2.1	-	73	-0.055	7.56	0.046
213	35.831	0.172	2.93	94	2.0	-	73	-0.057	7.63	0.046
214	36.002	0.171	2.92	94	1.6	-	73	-0.059	7.56	0.046
215	36.171	0.169	2.93	94	1.6	-	73	-0.056	7.37	0.045
216	36.340	0.169	2.92	94	1.9	-	73	-0.057	7.38	0.044
217	36.512	0.172	2.91	94	1.6	-	73	-0.055	7.46	0.051
218	36.683	0.171	2.92	94	1.8	-	73	-0.057	7.45	0.043
219	36.851	0.168	2.92	94	1.7	-	73	-0.055	7.44	0.052
220	37.022	0.171	2.92	94	1.7	99	73	-0.054	7.35	0.047
221	37.194	0.172	2.92	94	1.6	-	73	-0.055	7.35	0.047
222	37.363	0.169	2.93	94	1.6	-	73	-0.055	7.42	0.043
223	37.532	0.169	2.92	94	1.6	-	73	-0.058	7.40	0.046

BOX B TEST DATA - ASTM E2780 / ASTM E2515

Client: FPI
Model: I3000
Run #: 3

Job #: 23-229
Tracking #: 169
Technician: AK
Date: 11/29/2023

	Particulate Sampling Data							Flue Gas Data		
Elapsed Time (min)	Gas Meter (ft^3)	Sample Rate (cfm)	Orifice dH (in H_2O)	Meter Temp (°F)	Meter Vacuum (in Hg)	Pro. Rate (%)	Filter (°F)	Flue Draft (in H_2O)	CO_2 (%)	CO (%)
224	37.703	0.171	2.92	94	1.9	-	73	-0.057	7.33	0.054
225	37.875	0.172	2.93	94	1.6	-	73	-0.055	7.34	0.046
226	38.043	0.168	2.93	94	2.0	-	73	-0.056	7.38	0.052
227	38.214	0.171	2.92	94	1.6	-	73	-0.055	7.34	0.052
228	38.387	0.173	2.92	94	2.0	-	73	-0.054	7.36	0.054
229	38.557	0.170	2.92	94	1.6	-	73	-0.056	7.39	0.052
230	38.725	0.168	2.93	94	2.0	101	73	-0.053	7.35	0.051
231	38.897	0.172	2.93	94	1.5	-	73	-0.056	7.19	0.054
232	39.068	0.171	2.93	94	1.7	-	73	-0.054	7.21	0.054
233	39.236	0.168	2.93	94	2.1	-	73	-0.055	7.22	0.052
234	39.407	0.171	2.92	94	2.0	-	73	-0.055	7.20	0.058
235	39.579	0.172	2.93	94	1.6	-	73	-0.055	7.26	0.064
236	39.750	0.171	2.93	94	2.0	-	73	-0.056	7.18	0.059
237	39.919	0.169	2.92	94	1.6	-	73	-0.055	7.23	0.059
238	40.090	0.171	2.93	94	1.6	-	73	-0.054	7.13	0.046
239	40.262	0.172	2.93	94	1.8	-	73	-0.053	7.06	0.043
240	40.430	0.168	2.93	94	1.6	102	73	-0.054	6.94	0.040
241	40.599	0.169	2.92	94	1.9	-	73	-0.053	6.89	0.036
242	40.772	0.173	2.93	94	2.0	-	73	-0.055	6.85	0.037
243	40.942	0.170	2.92	94	1.8	-	73	-0.054	6.72	0.036
244	41.112	0.170	2.93	94	1.6	-	73	-0.056	6.78	0.038
245	41.283	0.171	2.93	94	1.7	-	73	-0.054	6.81	0.036
246	41.455	0.172	2.93	94	1.6	-	73	-0.053	6.72	0.038
247	41.624	0.169	2.93	94	1.6	-	73	-0.056	6.77	0.041
248	41.794	0.170	2.93	94	2.1	-	73	-0.053	6.83	0.041
249	41.965	0.171	2.92	94	1.7	99	73	-0.055	6.76	0.040
Avg/Tot	41.965	0.169	2.89	88.4	1.8	100	73.4	-0.066	9.52	0.108

BOX C TEST DATA - ASTM E2780 / ASTM E2515

Client: FPI
Model: I3000
Run #: 3

Job #: 23-229
Tracking #: 169
Technician: AK
Date: 11/29/2023

	Particulate Sampling Data						
Elapsed Time (min)	Gas Meter (ft^3)	Sample Rate (cfm)	Orifice dH (in H_2O)	Meter Temp (°F)	Meter Vacuum (in Hg)	Pro. Rate (%)	Filter (°F)
0	0.000		0.32	69	1.4		69
1	0.132	0.132	0.92	68	1.7	-	69
2	0.273	0.141	0.94	68	1.6	-	69
3	0.410	0.137	0.92	68	1.7	-	69
4	0.553	0.143	0.94	68	1.5	-	69
5	0.692	0.139	0.93	68	1.6	-	69
6	0.834	0.142	0.95	68	1.6	-	69
7	0.974	0.140	0.93	69	1.5	-	70
8	1.117	0.143	0.95	69	1.7	-	70
9	1.255	0.138	0.94	69	1.6	-	70
10	1.399	0.144	0.96	69	1.5	98	70
11	1.541	0.142	0.96	69	1.8	-	70
12	1.686	0.145	0.95	69	1.6	-	70
13	1.828	0.142	0.97	70	1.6	-	70
14	1.974	0.146	0.97	70	1.7	-	70
15	2.117	0.143	0.96	70	1.8	-	70
16	2.262	0.145	0.98	71	1.8	-	70
17	2.404	0.142	0.98	71	1.7	-	70
18	2.550	0.146	0.97	72	1.7	-	71
19	2.693	0.143	0.98	72	1.7	-	70
20	2.837	0.144	0.98	72	1.7	99	71
21	2.984	0.147	0.97	73	1.6	-	71
22	3.130	0.146	0.98	73	1.8	-	71
23	3.275	0.145	0.99	73	1.6	-	71
24	3.420	0.145	0.98	73	1.6	-	71
25	3.563	0.143	0.99	73	1.8	-	71
26	3.712	0.149	0.99	73	1.8	-	71
27	3.857	0.145	0.99	74	1.7	-	71
28	4.000	0.143	0.98	74	1.8	-	71
29	4.149	0.149	0.99	74	1.8	-	71
30	4.296	0.147	1.00	75	1.8	101	71
31	4.442	0.146	1.00	75	1.6	-	71

BOX C TEST DATA - ASTM E2780 / ASTM E2515

Client: FPI
Model: I3000
Run #: 3

Job #: 23-229
Tracking #: 169
Technician: AK
Date: 11/29/2023

	Particulate Sampling Data						
Elapsed Time (min)	Gas Meter (ft^3)	Sample Rate (cfm)	Orifice dH (in H_2O)	Meter Temp (°F)	Meter Vacuum (in Hg)	Pro. Rate (%)	Filter (°F)
32	4.589	0.147	0.99	75	1.6	-	71
33	4.735	0.146	0.99	76	1.6	-	71
34	4.884	0.149	1.01	76	1.7	-	71
35	5.031	0.147	1.01	76	1.6	-	71
36	5.179	0.148	1.01	76	1.8	-	71
37	5.326	0.147	1.00	77	1.8	-	71
38	5.474	0.148	1.00	77	1.6	-	71
39	5.623	0.149	1.01	77	1.7	-	71
40	5.772	0.149	1.02	77	1.8	102	71
41	5.920	0.148	1.02	77	1.6	-	71
42	6.069	0.149	1.02	77	1.6	-	71
43	6.217	0.148	1.01	77	1.6	-	71
44	6.366	0.149	1.01	77	1.8	-	71
45	6.516	0.150	1.02	78	1.8	-	71
46	6.666	0.150	1.02	77	1.7	-	71
47	6.813	0.147	1.03	78	1.8	-	71
48	6.966	0.153	1.03	78	1.6	-	71
49	7.115	0.149	1.03	78	1.8	-	72
50	7.265	0.150	1.02	78	1.6	101	71
51	7.415	0.150	1.02	78	1.7	-	71
52	7.565	0.150	1.02	78	1.8	-	71
53	7.716	0.151	1.02	78	1.6	-	72
54	7.866	0.150	1.02	78	1.8	-	71
55	8.017	0.151	1.03	78	1.8	-	71
56	8.168	0.151	1.04	78	1.6	-	71
57	8.320	0.152	1.04	79	1.6	-	71
58	8.471	0.151	1.04	79	1.6	-	71
59	8.622	0.151	1.04	79	1.8	-	71
60	8.774	0.152	1.04	79	1.8	102	71
Avg/Tot	8.774	0.146	0.98	73.9	1.7	101	70.7

WOODSTOVE SURFACE TEMPERATURE DATA

Client: FPI
Model: I3000
Run #: 3

Job #: 23-229
Tracking #: 169
Technician: AK
Date: 11/29/2023

Stove ΔT: 57

	Temperature Data (°F)						
Elapsed Time (min)	FB Left	FB Right	FB Back	FB Top	FB Bottom	Stove Surface Average	Catalyst Exit
0	368	401	219	479	294	352.0	667.7
1	367	400	221	474	301	352.5	636.7
2	367	399	221	471	309	353.3	665.2
3	366	398	220	472	317	354.4	804.2
4	365	397	222	480	324	357.6	899.8
5	364	395	221	495	331	361.2	939.1
6	362	393	222	509	338	364.6	921.5
7	360	391	224	522	344	368.2	906.7
8	358	389	224	533	349	370.5	894.5
9	357	387	226	542	354	373.0	904.7
10	354	384	225	550	359	374.3	921.2
11	352	382	226	557	363	375.9	942.9
12	350	380	225	565	367	377.3	941.3
13	348	377	225	572	370	378.5	941.9
14	346	375	226	579	374	379.6	940.3
15	344	373	226	583	376	380.4	947.0
16	342	371	227	591	376	381.3	964.8
17	340	369	226	595	371	380.0	967.7
18	338	367	224	600	364	378.4	956.1
19	336	366	224	604	356	377.1	947.4
20	334	364	223	607	348	375.3	946.3
21	333	362	222	609	341	373.4	946.3
22	331	360	220	610	334	370.8	946.9
23	329	359	219	609	328	368.9	946.6
24	328	358	217	611	322	367.1	949.1
25	326	357	217	614	317	366.2	955.5
26	325	356	214	617	312	364.6	957.1
27	324	355	214	621	308	364.1	953.6
28	322	354	213	625	304	363.6	948.4
29	321	353	211	628	300	362.6	940.3
30	320	352	209	631	297	361.8	934.8
31	318	352	209	633	294	361.2	933.4
32	318	351	208	635	291	360.6	934.7
33	317	351	207	636	289	359.9	937.9
34	316	350	205	638	286	359.0	949.0
35	316	351	204	640	284	358.7	955.4
36	315	350	204	641	282	358.3	957.6
37	315	351	203	642	280	358.0	959.1
38	314	351	202	644	278	358.0	954.7
39	315	352	202	644	276	357.7	949.4
40	315	352	201	644	274	357.3	946.9
41	315	353	200	645	272	356.9	943.7
42	315	354	200	645	270	356.8	940.5
43	316	355	198	645	268	356.2	939.1
44	317	355	198	645	266	356.1	937.7
45	317	355	197	645	264	355.4	938.0
46	318	356	195	645	262	355.2	936.5
47	318	357	196	644	260	354.9	934.5

WOODSTOVE SURFACE TEMPERATURE DATA

Client: FPI
Model: I3000
Run #: 3

Job #: 23-229
Tracking #: 169
Technician: AK
Date: 11/29/2023

Stove ΔT: 57

	Temperature Data (°F)						
Elapsed Time (min)	FB Left	FB Right	FB Back	FB Top	FB Bottom	Stove Surface Average	Catalyst Exit
48	319	357	196	644	257	354.6	933.2
49	320	357	196	642	255	353.9	933.3
50	320	358	194	642	253	353.2	933.4
51	321	358	193	642	251	353.1	937.2
52	322	358	193	641	250	352.8	939.3
53	323	358	193	641	248	352.5	939.4
54	324	358	192	642	246	352.4	942.0
55	324	358	192	643	245	352.4	940.6
56	325	358	193	643	243	352.5	939.4
57	326	359	192	644	242	352.4	938.9
58	326	359	192	644	241	352.3	937.7
59	327	359	192	646	240	352.4	939.2
60	327	359	191	647	239	352.5	939.1
61	327	359	191	648	238	352.6	940.3
62	327	359	191	648	237	352.3	940.5
63	328	359	191	647	236	352.3	937.1
64	328	360	191	646	236	352.0	930.8
65	329	360	190	644	235	351.5	929.5
66	328	360	191	641	235	350.9	928.6
67	329	361	190	636	234	349.9	926.3
68	329	361	190	632	233	349.0	925.0
69	329	361	191	628	233	348.1	926.9
70	329	362	191	623	233	347.4	927.3
71	328	362	191	619	232	346.4	927.4
72	329	362	190	615	232	345.5	923.8
73	329	362	191	611	231	344.8	922.0
74	328	363	192	607	231	344.0	922.6
75	329	363	191	603	231	343.1	926.4
76	329	363	191	600	230	342.5	930.0
77	328	363	190	598	230	342.0	931.5
78	329	364	192	597	230	342.1	926.4
79	329	364	192	596	230	341.9	929.2
80	329	364	193	596	229	342.2	929.6
81	329	364	191	598	229	342.1	926.2
82	330	364	192	600	229	342.9	924.8
83	330	364	192	602	229	343.3	924.8
84	330	364	192	604	229	343.8	923.1
85	331	364	193	607	228	344.4	922.2
86	331	364	193	609	228	345.0	920.5
87	331	364	194	610	228	345.4	919.6
88	332	364	194	611	228	345.7	916.6
89	332	365	193	612	227	345.9	917.0
90	332	365	195	612	227	346.2	917.0
91	333	365	194	613	227	346.5	914.3
92	333	365	194	613	226	346.4	910.9
93	334	366	194	613	226	346.5	907.9
94	334	366	195	611	226	346.3	908.2
95	335	366	195	610	225	346.2	909.5

WOODSTOVE SURFACE TEMPERATURE DATA

Client: FPI
Model: I3000
Run #: 3

Job #: 23-229
Tracking #: 169
Technician: AK
Date: 11/29/2023

Stove ΔT: 57

	Temperature Data (°F)						
Elapsed Time (min)	FB Left	FB Right	FB Back	FB Top	FB Bottom	Stove Surface Average	Catalyst Exit
96	335	366	196	609	225	346.1	909.8
97	336	367	195	607	225	345.8	910.1
98	336	367	195	606	225	345.7	911.0
99	336	367	196	605	224	345.7	911.6
100	337	367	195	604	224	345.6	912.5
101	338	368	195	604	224	345.5	914.1
102	338	368	196	603	224	345.7	914.8
103	339	368	196	602	224	345.7	912.7
104	339	369	196	600	224	345.4	909.9
105	340	369	197	598	223	345.3	906.7
106	340	369	197	594	223	344.6	904.8
107	340	370	197	591	223	344.2	900.7
108	341	370	198	589	223	344.0	892.8
109	341	370	198	585	223	343.2	888.1
110	342	370	198	581	223	342.7	886.5
111	341	371	197	578	223	342.0	884.5
112	342	371	199	576	223	342.0	881.1
113	342	371	199	573	222	341.3	877.4
114	342	371	199	570	222	341.0	875.8
115	342	371	199	567	222	340.3	873.5
116	343	372	200	565	222	340.2	871.9
117	342	372	200	563	222	339.9	871.5
118	343	372	200	561	222	339.7	871.8
119	343	372	200	560	222	339.4	870.1
120	343	372	201	559	222	339.4	865.8
121	343	373	202	558	222	339.5	859.6
122	344	373	201	557	222	339.3	856.5
123	344	373	202	557	222	339.3	854.3
124	344	373	201	556	222	339.3	851.6
125	344	372	203	555	222	339.3	847.5
126	345	372	202	554	222	339.1	842.1
127	345	372	202	552	223	338.8	835.4
128	346	372	203	549	223	338.6	828.9
129	346	372	204	547	223	338.3	824.8
130	347	372	203	544	223	337.7	822.0
131	348	372	203	541	223	337.1	820.1
132	348	372	205	538	223	337.1	818.5
133	349	372	204	536	223	336.8	818.5
134	349	372	206	534	223	336.6	817.4
135	349	372	206	533	223	336.5	815.5
136	350	372	206	532	223	336.5	814.1
137	350	373	207	530	222	336.4	813.6
138	351	373	207	529	222	336.3	815.6
139	351	373	208	528	222	336.4	826.3
140	352	374	207	527	222	336.1	834.3
141	352	374	208	526	221	336.1	826.7
142	352	374	207	523	221	335.6	812.0
143	353	375	209	520	221	335.6	799.4

WOODSTOVE SURFACE TEMPERATURE DATA

Client: FPI
Model: I3000
Run #: 3

Job #: 23-229
Tracking #: 169
Technician: AK
Date: 11/29/2023

Stove ΔT: 57

	Temperature Data (°F)						
Elapsed Time (min)	FB Left	FB Right	FB Back	FB Top	FB Bottom	Stove Surface Average	Catalyst Exit
144	353	375	208	517	221	334.8	790.7
145	353	375	208	513	221	334.2	784.3
146	353	376	209	510	222	334.1	779.4
147	354	376	208	506	222	333.2	774.6
148	354	376	208	503	222	332.6	770.2
149	354	376	209	499	222	332.0	766.5
150	355	376	209	495	223	331.6	763.6
151	355	376	208	492	223	331.0	760.8
152	355	376	208	489	223	330.2	758.2
153	356	376	208	486	223	329.8	755.5
154	356	376	207	483	223	329.1	752.8
155	356	376	207	480	224	328.5	750.1
156	357	376	207	477	224	327.9	748.4
157	357	375	207	475	224	327.4	746.9
158	357	375	206	472	224	326.6	745.3
159	357	375	207	470	224	326.4	743.4
160	357	374	207	467	224	325.8	741.6
161	357	374	206	465	224	325.3	739.9
162	357	373	206	463	224	324.7	738.0
163	357	373	204	461	225	323.9	736.3
164	357	373	205	459	225	323.7	734.8
165	357	373	205	457	225	323.2	733.7
166	358	372	206	455	225	323.0	733.3
167	357	371	205	453	225	322.1	733.6
168	358	371	205	452	225	321.9	733.4
169	358	370	204	450	224	321.3	732.7
170	358	369	204	448	224	320.9	731.7
171	358	369	203	447	224	320.3	729.9
172	359	368	203	446	224	320.1	727.5
173	359	367	203	445	224	319.6	725.4
174	359	367	203	443	224	319.2	723.7
175	359	366	202	442	224	318.6	722.4
176	358	365	201	441	224	317.9	721.2
177	358	365	202	440	224	317.6	720.4
178	358	364	201	438	223	316.9	719.2
179	358	363	202	437	223	316.7	718.2
180	358	363	200	436	223	315.9	717.3
181	358	362	200	435	223	315.4	716.4
182	358	361	199	434	222	315.0	715.3
183	358	361	201	433	222	314.8	714.3
184	357	360	201	432	222	314.4	713.3
185	357	359	200	431	222	313.7	712.2
186	357	358	200	429	222	313.2	711.8
187	356	358	201	429	222	313.0	711.4
188	356	357	201	428	222	312.7	711.3
189	356	356	202	428	221	312.4	711.1
190	355	355	202	427	221	312.0	711.1
191	354	355	202	426	221	311.5	710.5

WOODSTOVE SURFACE TEMPERATURE DATA

Client: FPI
Model: I3000
Run #: 3

Job #: 23-229
Tracking #: 169
Technician: AK
Date: 11/29/2023

Stove ΔT: 57

	Temperature Data (°F)						
Elapsed Time (min)	FB Left	FB Right	FB Back	FB Top	FB Bottom	Stove Surface Average	Catalyst Exit
192	354	354	203	425	221	311.3	709.7
193	354	353	202	425	221	310.9	708.8
194	353	353	202	424	221	310.5	707.7
195	353	352	202	424	221	310.3	706.8
196	352	351	202	423	221	309.8	706.2
197	352	351	203	422	220	309.6	705.7
198	352	350	202	421	220	309.1	705.4
199	351	350	203	421	220	309.0	705.1
200	351	349	204	421	220	309.0	704.8
201	350	349	204	420	220	308.6	703.0
202	350	348	204	419	220	308.3	700.8
203	350	348	204	418	219	307.8	697.2
204	350	348	205	417	219	307.6	692.2
205	350	347	205	416	219	307.5	689.5
206	349	347	205	415	219	307.1	689.1
207	348	347	205	415	219	306.7	688.9
208	348	346	207	414	219	306.8	689.4
209	348	346	206	413	219	306.3	689.4
210	347	346	207	412	219	306.2	688.6
211	347	346	207	412	219	305.9	686.0
212	346	345	207	411	219	305.5	683.0
213	346	345	207	410	219	305.4	680.8
214	345	345	207	409	219	305.0	679.2
215	344	345	206	409	219	304.5	678.3
216	344	345	207	408	219	304.6	676.7
217	344	344	208	406	219	304.3	676.0
218	344	344	208	405	220	304.3	675.7
219	343	344	207	404	220	303.6	675.8
220	343	344	206	404	220	303.4	676.3
221	342	343	207	403	221	303.2	676.4
222	342	343	207	402	221	303.0	676.1
223	342	342	207	401	221	302.6	676.5
224	341	343	207	401	222	302.5	676.7
225	341	342	207	400	222	302.3	677.0
226	340	342	207	400	222	302.0	676.9
227	340	341	207	399	222	302.1	676.9
228	340	341	207	398	222	301.7	676.8
229	339	341	206	398	223	301.5	676.8
230	339	340	207	398	223	301.3	677.1
231	339	340	207	397	223	301.1	677.4
232	338	340	207	397	223	300.9	676.0
233	338	339	207	396	224	300.6	672.7
234	337	339	206	395	224	300.2	671.3
235	337	338	206	395	224	300.0	671.4
236	337	338	206	395	224	299.8	671.6
237	336	337	204	394	224	299.1	670.5
238	335	337	205	393	225	299.0	668.7
239	335	337	205	393	225	298.8	665.7

WOODSTOVE SURFACE TEMPERATURE DATA

Client: FPI
Model: I3000
Run #: 3

Job #: 23-229
Tracking #: 169
Technician: AK
Date: 11/29/2023

Stove ΔT: 57

	Temperature Data (°F)						
Elapsed Time (min)	FB Left	FB Right	FB Back	FB Top	FB Bottom	Stove Surface Average	Catalyst Exit
240	334	336	205	392	225	298.5	662.8
241	334	336	205	391	225	297.9	660.4
242	333	335	204	390	225	297.4	658.3
243	333	335	204	390	225	297.2	656.0
244	332	335	204	388	225	296.7	653.9
245	332	334	202	388	225	296.1	652.9
246	331	333	203	386	225	295.7	652.2
247	330	333	202	385	226	295.3	651.4
248	330	333	201	385	226	295.0	650.6
249	329	333	202	383	226	294.5	650.1
Average	341.1	361.5	203.4	523.8	242.7	334.5	819.5

LAB SAMPLE DATA - ASTM E2515

Client: FPI
Model: I3000
Run #: 3

Job #: 23-229
Tracking #: 169
Technician: AK
Date: 11/29/2023

		Sample ID	Tare, mg	Final, mg	Catch, mg
Filters	**A**	G00761	250.6	251.9	1.3
	B	G00762	250.6	252.0	1.4
	C - 1st Hour	G00763	250.2	250.6	0.4
	Amb	G00764	251.5	251.5	0.0
Probes	**A**	3A	115881.1	115881.6	0.5
	B	3B	116121.0	116121.4	0.4
	C - 1st Hour	3C	116618.9	116619.3	0.4
O-rings	**A**	3A	3581.1	3581.1	0.0
	B	3B	3569.9	3570.0	0.1
	C - 1st Hour	3C	3624.0	3624.0	0.0

Placed in Dessicator on:	12/1/2023

Balance Audit (mg):		200.0		200.0		200.0		200.0	
		Weight (mg)	Date/Time	Weight (mg)	Date/Time	Weight (mg)	Date/Time	Weight (mg)	Date/Time
Filters	**A**	251.8	12/1 14:00	252.2	12/4 10:00	251.9	12/6 15:00	251.9	12/7 8:00
	B	252.1	12/1 14:00	252.4	12/4 10:00	251.9	12/6 15:00	252.0	12/7 8:00
	C - 1st Hour	250.3	12/1 14:00	250.6	12/4 10:00	250.6	12/6 15:00		
	Amb	251.5	12/1 14:00	251.5	12/4 10:00				
Probes	**A**	115881.8	12/1 14:00	115881.6	12/4 10:00				
	B	116121.5	12/1 14:00	116121.4	12/4 10:00				
	C - 1st Hour	116619.2	12/1 14:00	116619.3	12/4 10:00				
O-Rings	**A**	3581.3	12/1 14:00	3581.1	12/4 10:00				
	B	3569.9	12/1 14:00	3570.0	12/4 10:00				
	C - 1st Hour	3624.1	12/1 14:00	3624.0	12/4 10:00				

Train A Aggregate, mg:	**1.8**
Train B Aggregate, mg:	**1.9**
Train C Aggregate, mg:	**0.8**
Ambient, mg:	**0.0**

ASTM E2780 Wood Heater Run Sheets

Client: FPI Job Number: 23-229 Tracking #: 169
Model: I3000 Run Number: 3 Test Date: 11/29/23

Wood Heater Run Notes

Test Control Settings

Primary Air Setting(s): Open 0.516”
Targeted Burn Category: III

Preburn Notes

Time	Notes
42:00	Removed 0.80 lbs.

Test Notes

Test Burn Start Time: 12:18 Test Fuel Loaded by: 35 seconds
Door Closed: 40 seconds Air Control Set at: 300 seconds
Other Loading Notes: Bypass open while door open, fan set to high @ 15 min

Time	Notes
	-None-

Test Burn End Time: 16:27

Flue Gas Concentration Measurement

Calibration Gas Values: Span Gas CO_2 (%): 16.98 CO (%): 4.30
Mid Gas CO_2 (%): 10.00 CO (%): 2.51

Calibration Results:

	Pre Test			Post Test		
	Zero	Span	Mid	Zero	Span	Mid
Time	11/29 6:44	11/29 6:45	11/29 6:47	11/30 6:44	11/30 6:45	11/30 6:47
CO_2	0.08	17.03	10.15	0.02	16.98	10.07
CO	0.050	4.326	2.515	0.008	4.331	2.535

Flue Gas Probe Leak Check: Initial: No Leakage Final: No Leakage

Technician Signature: Date: 11/30/23

ASTM E2780 Wood Heater Run Sheets

Client: FPI Job Number: 23-229 Tracking #: 169
Model: I3000 Run Number: 3 Test Date: 11/29/23

Test Fuel Front/Side View

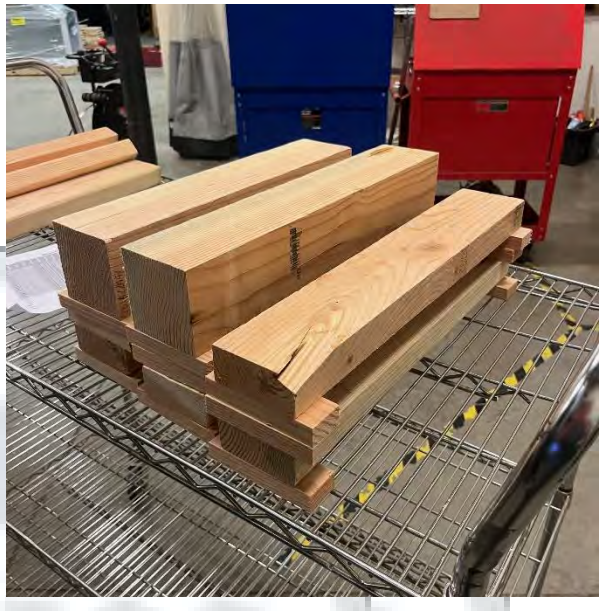

Test Fuel Iso View

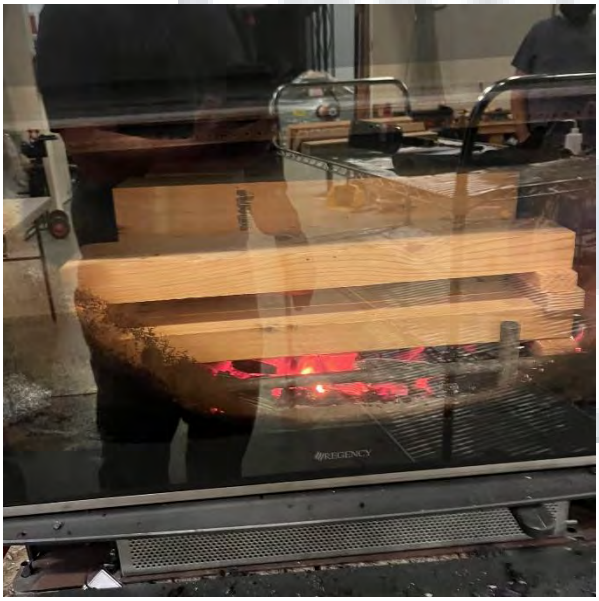

Test Fuel Loaded in Stove

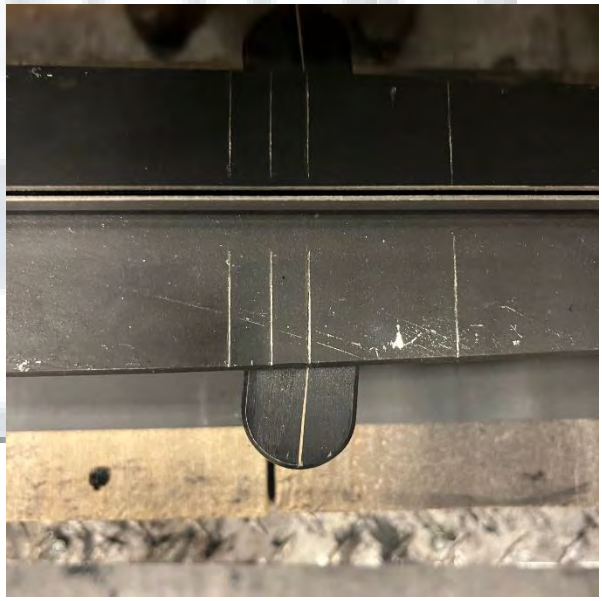

Air Setting

Technician Signature: Date: 11/30/23

WOOD STOVE TEST DATA PACKET
ASTM E2780/E2515

Run 4 Data Summary

Client:	FPI
Model:	I3000
Job #:	23-229
Tracking #:	169
Test Date:	11/30/2023

Technician Signature

1/29/2024
Date

TEST RESULTS - ASTM E2780 / ASTM E2515

Client: FPI
Model: I3000
Run #: 4

Job #: 23-229
Tracking #: 169
Technician: AK
Date: 11/30/2023

Burn Rate (kg/hr):	1.19

	Ambient Sample	Sample Train A	Sample Train B	1st Hour Filter
Total Sample Volume (ft^3)	35.495	56.739	56.856	8.777
Average Gas Velocity in Dilution Tunnel (ft/sec)	13.3			
Average Gas Flow Rate in Dilution Tunnel (dscf/hr)	36217.3			
Average Gas Meter Temperature (°F)	64.5	90.6	89.7	73.8
Total Sample Volume (dscf)	35.706	54.798	55.014	8.766
Average Tunnel Temperature (°F)	76.3			
Total Time of Test (min)	337			
Total Particulate Catch (mg)	0.2	1.2	1.4	0.8
Particulate Concentration, dry-standard (g/dscf)	0.0000056	0.0000219	0.0000254	0.0000913
Total PM Emissions (g)	1.14	3.32	4.04	3.10
Particulate Emission Rate (g/hr)	0.20	0.59	0.72	3.10
Emissions Factor (g/kg)	-	0.50	0.61	-
Difference from Average Total Particulate Emissions (g)	-	0.36	0.36	-
Difference from Average Total Particulate Emissions (%)	-	9.8%	9.8%	
Difference from Average Emissions Factor (g/kg)	-	0.05	0.05	-

Final Average Results	
Total Particulate Emissions (g)	3.68
Particulate Emission Rate (g/hr)	0.65
Emissions Factor (g/kg)	0.55
HHV Efficiency (%)	79.0%
LHV Efficiency (%)	85.4%
CO Emissions (g/min)	0.32

Quality Checks	Requirement	Observed	Result
Dual Train Precision	Each train within 7.5% of average emissions (in grams), or emission factors within 0.5 g/kg	See Above	OK
Filter Temps	<90 °F	73.5	OK
Face Velocity	< 30 ft/min	9.4	OK
Leakage Rate	Less than 4% of average sample rate	0 cfm	OK
Ambient Temp	55-90 °F	Min:62.8/Max:65.4	OK
Negative Probe Weight Evaluation	<5% of Total Catch	Probe Catch Not Negative	OK
Pro-Rate Variation	90% of readings between 90-110%; none greater than 120% or less than 80%	See Data Tabs	OK
Stove Surface ΔT	<126°F	99.3	OK

B415.1 Efficiency Results

Manufacturer:	FPI
Model:	I3000
Date:	11/30/23
Run:	4
Control #:	23-229
Test Duration:	337
Output Category:	2

Test Results in Accordance with CSA B415.1-09

	HHV Basis	LHV Basis
Overall Efficiency	79.0%	85.4%
Combustion Efficiency	99.2%	99.2%
Heat Transfer Efficiency	79.7%	86.1%

Output Rate (kJ/h)	18,277	17,338	**(Btu/h)**
Burn Rate (kg/h)	1.17	2.57	**(lb/h)**
Input (kJ/h)	23,135	21,946	**(Btu/h)**

Test Load Weight (dry kg)	6.56	14.46	**dry lb**
MC wet (%)	18.09		
MC dry (%)	22.09		
Particulate (g)	3.68		
CO (g)	106		
Test Duration (h)	5.62		

Emissions	Particulate	CO
g/MJ Output	0.04	1.04
g/kg Dry Fuel	0.56	16.20
g/h	0.65	18.92
g/min	0.01	0.32
lb/MM Btu Output	0.08	2.41

Air/Fuel Ratio (A/F)	14.90

VERSION: **2.4** **4/15/2010**

WOODSTOVE FUEL DATA - ASTM E2780

Client: FPI
Model: I3000
Run #: 4

Job #: 23-229
Tracking #: 169
Technician: AK
Date: 11/30/2023

Preburn Fuel Information						
Size	Length (in)	Moisture Content (% DB)		Size	Length (in)	Moisture Content (% DB)
2x4	17.00	22.9		2x4	20.00	19.1
2x4	17.00	24.5				
2x4	17.00	24.4				
2x4	17.00	24.8				
2x4	17.00	24.3				
2x4	17.00	23.4				
2x4	20.00	19.6				
2x4	20.00	19.3				
Total Fuel Weight (lbs):		18.01		Average Moisture (%DB):		22.5

Firebox Volume (ft^3):	2.75
Total 2x4 Crib Weight, with spacers (lbs):	9.13
Total 4x4 Crib Weight, with spacers (lbs):	8.71
Total Wet Fuel Weight, with spacers (lbs):	17.84

Coal Bed Range (20-25%):
Min (lbs): 3.57
Max (lbs): 4.46

Test Fuel Information						
Size	Length (in)	Weight (lbs)	Moisture Content (%DB)			Dry Weight (lbs)
2x4	20.00	2.09	21.7	20.6	22.8	1.72
2x4	20.00	2.03	22.7	22.1	20.2	1.67
2x4	18.50	1.90	22.7	22.6	19.1	1.56
4x4	18.50	4.63	24.9	20.6	20.5	3.80
2x4	17.00	1.81	23.0	23.2	21.7	1.48
4x4	17.00	3.73	24.1	22.1	23.0	3.03
					Total Dry Weight, no spacers (lbs):	13.25
					Total Dry Weight, with spacers (lbs):	14.68

Spacer Moisture Readings (%DB)							
15.4	15.5	16.5					
17.3	11.9	10.0					
15.1	16.1						
18.9	13.1						
17.2	18.3						
17.9	17.9						
16.7	19.4						
11.4	15.1						

Quality Checks	Requirement	Observed	Result
Fuel Density	25 - 36 (lbs/ft^3, DB)	27.5	OK
Loading Density	6.3 - 7.7 (lbs/ft^3, WB)	6.49	OK
2x4 Fuel Mix	35 - 65 % of total weight	51%	OK

DILUTION TUNNEL & MISC. DATA - ASTM E2780 / E2515

Client:	FPI	Job #:	23-229
Model:	I3000	Tracking #:	169
Run #:	4	Technician:	AK
Test Start Time:	12:52	Date:	11/30/2023

Total Sampling Time (min):	337	
Recording Interval (min):	1	
Meter Box γ Factor:	1.004	(A)
Meter Box γ Factor:	1.004	(B)
Meter Box γ Factor:	1.011	(C)
Meter Box γ Factor:	1.003	(Ambient)
Induced Draft Check (in. H_2O):	0	
Smoke Capture Check (%):	100%	
Date Flue Pipe Last Cleaned:	11/13/2023	
Test Fuel Scale Audit (lbs)	10.00	
Platform Scale Audit (lbs)	10.0	

	Pre-Test	Post Test	Avg.
Barometric Pressure (in. Hg)	29.71	29.93	29.82
Relative Humidity (%)	25.6	32.8	
Room Air Velocity (ft/min)	<50	<50	
Pitot Tube Leak Check	0	0	
Ambient Sample Volume:		35.495	ft^3

Sample Train Leak Checks

	Pre-test	Post-test			
(A)	0.000	0.000	cfm @	-6	in. Hg
(B)	0.000	0.000	cfm @	-5	in. Hg
(C)	0.000	0.000	cfm @	-5	in. Hg
(Ambient)	0.000	0.000	cfm @	-12	in. Hg

DILUTION TUNNEL FLOW

Traverse Data

Point	dP (in H_2O)	Temp (°F)
1	0.028	95
2	0.036	94
3	0.040	94
4	0.056	94
5	0.052	94
6	0.043	93
7	0.034	93
8	0.042	93
9	0.042	93
10	0.056	92
11	0.048	92
12	0.030	91
Center	0.052	91

Static Pressure: -0.110 in. H_2O

Dilution Tunnel H_2O:	2.00	percent
Tunnel Diameter:	12	inches
Pitot Tube Cp:	0.99	[unitless]
Dilution Tunnel MW(dry):	29.00	lb/lb-mole
Dilution Tunnel MW(wet):	28.78	lb/lb-mole
Tunnel Area:	0.7854	ft^2
V_{strav}:	13.91	ft/sec
V_{scent}:	15.49	ft/sec
F_p:	0.898	[ratio]
Initial Tunnel Flow:	610.0	scf/min

TEST FUEL PROPERTIES

Fuel Load Configuration

Firebox Front

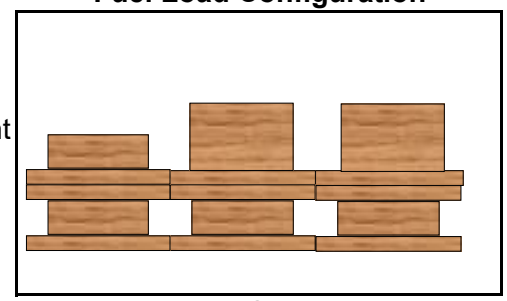

Firebox Back

Firebox Side View

Actual Fuel Used Properties

Fuel Type:	D. Fir
HHV (kJ/kg)	19,810
%C	48.73
%H	6.87
%O	43.9
%Ash	0.5
MC (%DB)	22.1

WOODSTOVE PREBURN DATA - ASTM E2780

Client: FPI
Model: I3000
Run #: 4

Job #: 23-229
Tracking #: 169
Technician: AK
Date: 11/30/2023

Recording Interval (min): 1
Run Time (min): 60

			Temperatures (°F)							
Elapsed Time (min)	Scale Reading (lbs)	Flue Draft (in H_2O)	FB Left	FB Right	FB Back	FB Top	FB Bottom	Stove Surface Average	Flue	Ambient
0	5.45	-0.073	413	469	268	729	445	464.8	433	67
1	5.41	-0.071	415	469	269	723	442	463.5	392	67
2	5.37	-0.069	416	469	270	714	437	461.2	372	66
3	5.34	-0.069	418	469	271	710	430	459.7	357	66
4	5.31	-0.068	420	469	269	701	423	456.3	348	66
5	5.29	-0.066	422	468	271	693	416	453.8	341	66
6	5.25	-0.065	423	468	272	683	409	450.7	334	66
7	5.23	-0.065	424	467	272	673	402	447.5	329	66
8	5.19	-0.064	424	466	271	663	396	443.9	325	66
9	5.17	-0.063	425	464	272	653	390	440.8	321	66
10	5.15	-0.063	425	462	270	643	384	436.8	319	66
11	5.12	-0.061	424	461	270	634	379	433.5	315	66
12	5.10	-0.062	424	459	270	624	375	430.3	310	66
13	5.07	-0.062	423	457	270	615	370	427.0	308	66
14	5.05	-0.060	423	455	270	607	366	423.9	304	66
15	5.02	-0.060	422	452	270	598	363	420.9	301	66
16	5.00	-0.061	421	450	267	590	359	417.4	299	66
17	4.97	-0.061	420	447	266	582	356	414.4	297	66
18	4.95	-0.061	419	446	267	575	354	411.8	295	66
19	4.93	-0.059	418	444	266	567	351	409.1	292	65
20	4.91	-0.057	416	442	265	560	349	406.3	289	66
21	4.89	-0.057	414	439	264	553	346	403.4	288	66
22	4.87	-0.058	414	437	263	547	344	401.0	286	66
23	4.84	-0.056	412	435	264	541	342	398.8	284	66
24	4.82	-0.057	411	433	262	535	341	396.4	281	66
25	4.80	-0.055	410	431	262	529	339	394.0	280	66
26	4.78	-0.055	408	429	260	524	337	391.8	276	66
27	4.76	-0.055	406	428	260	518	336	389.5	275	66
28	4.74	-0.056	405	426	260	514	334	387.7	273	66
29	4.72	-0.054	404	424	257	508	333	385.3	272	66
30	4.70	-0.055	403	422	257	504	332	383.5	271	66
31	4.68	-0.054	401	420	255	499	331	381.3	269	65
32	4.66	-0.053	399	419	256	495	330	379.6	267	66
33	4.64	-0.053	398	417	255	491	329	377.9	266	66
34	4.62	-0.053	397	415	254	487	328	376.2	264	66
35	4.60	-0.053	396	413	253	483	327	374.5	262	65
36	4.58	-0.051	394	412	253	479	327	372.8	261	65
37	4.56	-0.053	393	410	252	475	326	371.2	260	65
38	4.53	-0.054	391	409	251	471	326	369.6	260	65
39	4.51	-0.052	390	407	251	468	325	368.1	257	65
40	4.49	-0.052	389	405	249	465	324	366.4	256	66
41	4.47	-0.052	387	404	248	462	324	364.8	255	66
42	4.45	-0.051	386	402	248	458	324	363.6	254	66
43	4.42	-0.050	385	401	247	455	323	362.2	252	65
44	4.40	-0.051	383	399	246	452	323	360.6	252	65

WOODSTOVE PREBURN DATA - ASTM E2780

Client: FPI
Model: I3000
Run #: 4

Job #: 23-229
Tracking #: 169
Technician: AK
Date: 11/30/2023

Recording Interval (min): 1
Run Time (min): 60

			Temperatures (°F)							
Elapsed Time (min)	Scale Reading (lbs)	Flue Draft (in H_2O)	FB Left	FB Right	FB Back	FB Top	FB Bottom	Stove Surface Average	Flue	Ambient
45	4.38	-0.052	382	398	246	449	323	359.5	251	65
46	4.36	-0.051	380	397	245	447	322	358.1	250	65
47	4.35	-0.049	379	395	245	444	322	356.9	248	65
48	4.33	-0.050	377	393	244	440	322	355.3	247	65
49	4.31	-0.049	377	392	244	438	322	354.4	244	65
50	4.28	-0.048	375	390	241	436	322	352.7	243	65
51	4.27	-0.049	374	389	242	432	322	351.8	242	65
52	4.25	-0.048	372	387	241	430	322	350.4	241	65
53	4.23	-0.047	371	386	241	428	322	349.3	239	65
54	4.21	-0.046	370	384	241	425	322	348.2	237	65
55	4.19	-0.047	369	382	239	422	322	346.9	238	65
56	4.18	-0.048	368	381	240	420	322	346.2	238	65
57	4.15	-0.048	366	379	239	418	322	344.9	236	65
58	4.14	-0.047	366	378	238	416	322	343.9	236	65
59	4.12	-0.047	364	376	238	414	322	342.8	235	65
60	4.10	-0.047	362	375	236	412	323	341.6	233	65

BOX A TEST DATA - ASTM E2780 / ASTM E2515

Client: FPI
Model: I3000
Run #: 4

Job #: 23-229
Tracking #: 169
Technician: AK
Date: 11/30/2023

	Particulate Sampling Data							Fuel Weight (lb)		Temperature Data (°F)			
Elapsed Time (min)	Gas Meter (ft^3)	Sample Rate (cfm)	Dilution Tunnel dP (in H_2O)	Orifice dH (in H_2O)	Meter Temp (°F)	Meter Vacuum (in Hg)	Pro. Rate (%)	Scale Reading	Weight Change	Dilution Tunnel	Flue	Filter	Ambient
0	-0.004		0.050	0.93	70	0.8		17.65		82	306	68	65
1	0.099	0.103	0.049	2.29	70	0.9	-	17.64	-0.01	86	330	69	65
2	0.249	0.150	0.050	2.32	70	0.9	-	17.50	-0.14	83	310	69	65
3	0.400	0.151	0.050	2.36	70	1.0	-	17.31	-0.19	83	324	70	65
4	0.552	0.152	0.049	2.37	70	1.0	-	17.13	-0.18	84	347	70	65
5	0.702	0.150	0.050	2.38	70	0.9	-	16.92	-0.21	84	372	70	65
6	0.857	0.155	0.049	2.40	70	1.0	-	16.81	-0.11	82	347	70	65
7	1.006	0.149	0.050	2.41	70	0.9	-	16.72	-0.09	82	329	70	65
8	1.163	0.157	0.049	2.43	71	1.0	-	16.63	-0.09	81	317	70	65
9	1.315	0.152	0.050	2.45	71	1.0	-	16.54	-0.09	81	310	70	65
10	1.472	0.157	0.049	2.46	71	0.9	92	16.43	-0.11	81	306	70	65
11	1.624	0.152	0.050	2.48	71	0.9	-	16.31	-0.12	81	307	70	65
12	1.780	0.156	0.050	2.49	71	1.0	-	16.19	-0.12	81	307	70	65
13	1.935	0.155	0.050	2.49	71	1.0	-	16.07	-0.12	81	309	70	65
14	2.091	0.156	0.049	2.52	71	0.9	-	15.96	-0.11	81	313	70	65
15	2.247	0.156	0.050	2.52	72	1.0	-	15.83	-0.13	81	315	71	65
16	2.400	0.153	0.050	2.52	72	0.9	-	15.71	-0.12	81	317	71	65
17	2.563	0.163	0.050	2.55	72	1.0	-	15.59	-0.12	81	320	71	65
18	2.716	0.153	0.049	2.56	72	1.0	-	15.46	-0.13	81	321	71	65
19	2.877	0.161	0.049	2.56	73	1.0	-	15.33	-0.13	81	325	71	65
20	3.035	0.158	0.050	2.57	73	1.0	96	15.19	-0.14	81	327	71	65
21	3.193	0.158	0.050	2.59	73	1.0	-	15.06	-0.13	81	329	71	65
22	3.354	0.161	0.050	2.60	74	1.0	-	14.92	-0.14	82	330	71	65
23	3.510	0.156	0.049	2.60	74	1.0	-	14.79	-0.13	82	329	71	65
24	3.673	0.163	0.049	2.62	74	1.0	-	14.64	-0.15	82	330	71	65
25	3.830	0.157	0.049	2.62	75	1.0	-	14.49	-0.15	82	332	71	65
26	3.991	0.161	0.048	2.64	75	0.9	-	14.34	-0.15	82	333	71	65
27	4.153	0.162	0.049	2.63	75	1.0	-	14.20	-0.14	82	335	71	65
28	4.311	0.158	0.049	2.64	75	1.0	-	14.06	-0.14	82	336	71	65
29	4.474	0.163	0.049	2.66	76	1.0	-	13.93	-0.13	82	336	71	65
30	4.634	0.160	0.049	2.67	76	1.0	98	13.80	-0.13	82	336	71	65
31	4.795	0.161	0.050	2.67	76	1.0	-	13.67	-0.13	81	336	71	65

BOX A TEST DATA - ASTM E2780 / ASTM E2515

Client: FPI
Model: I3000
Run #: 4

Job #: 23-229
Tracking #: 169
Technician: AK
Date: 11/30/2023

	Particulate Sampling Data							Fuel Weight (lb)		Temperature Data (°F)			
Elapsed Time (min)	Gas Meter (ft^3)	Sample Rate (cfm)	Dilution Tunnel dP (in H_2O)	Orifice dH (in H_2O)	Meter Temp (°F)	Meter Vacuum (in Hg)	Pro. Rate (%)	Scale Reading	Weight Change	Dilution Tunnel	Flue	Filter	Ambient
32	4.958	0.163	0.049	2.67	77	1.0	-	13.54	-0.13	80	333	71	65
33	5.119	0.161	0.050	2.68	77	1.0	-	13.40	-0.14	80	335	71	65
34	5.281	0.162	0.049	2.67	77	1.0	-	13.25	-0.15	80	337	71	65
35	5.446	0.165	0.049	2.69	78	1.0	-	13.11	-0.14	80	338	71	65
36	5.603	0.157	0.049	2.69	78	1.0	-	12.98	-0.13	80	337	71	65
37	5.770	0.167	0.049	2.69	78	1.0	-	12.84	-0.14	80	339	71	65
38	5.930	0.160	0.049	2.69	79	1.0	-	12.71	-0.13	80	340	71	65
39	6.091	0.161	0.049	2.71	79	1.0	-	12.57	-0.14	80	341	71	65
40	6.256	0.165	0.048	2.72	79	1.0	100	12.43	-0.14	80	342	71	65
41	6.417	0.161	0.049	2.72	79	1.0	-	12.30	-0.13	80	342	71	65
42	6.584	0.167	0.049	2.72	80	1.0	-	12.17	-0.13	80	342	71	65
43	6.750	0.166	0.049	2.73	80	1.0	-	12.03	-0.14	80	343	71	65
44	6.911	0.161	0.050	2.73	80	1.0	-	11.90	-0.13	80	344	71	65
45	7.076	0.165	0.049	2.73	81	1.0	-	11.77	-0.13	80	343	71	65
46	7.242	0.166	0.049	2.74	81	1.0	-	11.65	-0.12	80	344	71	65
47	7.402	0.160	0.050	2.73	81	1.0	-	11.52	-0.13	80	343	71	65
48	7.571	0.169	0.050	2.75	82	1.0	-	11.38	-0.14	80	342	71	65
49	7.733	0.162	0.050	2.74	82	1.0	-	11.25	-0.13	80	342	71	65
50	7.896	0.163	0.049	2.75	82	1.0	100	11.13	-0.12	80	341	71	65
51	8.065	0.169	0.048	2.76	82	1.0	-	10.99	-0.14	80	343	71	65
52	8.227	0.162	0.049	2.76	83	1.0	-	10.85	-0.14	80	343	71	65
53	8.393	0.166	0.049	2.76	83	1.0	-	10.72	-0.13	80	344	71	65
54	8.560	0.167	0.050	2.76	83	1.0	-	10.59	-0.13	80	345	71	65
55	8.722	0.162	0.049	2.76	83	1.0	-	10.47	-0.12	81	345	71	65
56	8.888	0.166	0.049	2.77	84	1.0	-	10.34	-0.13	80	345	71	65
57	9.055	0.167	0.049	2.76	84	1.0	-	10.22	-0.12	80	347	71	65
58	9.219	0.164	0.049	2.78	84	1.0	-	10.09	-0.13	80	347	71	65
59	9.385	0.166	0.049	2.78	84	1.0	-	9.98	-0.11	80	344	71	65
60	9.549	0.164	0.049	2.77	85	1.0	100	9.86	-0.12	80	342	71	65
61	9.713	0.164	0.049	2.78	85	1.0	-	9.75	-0.11	80	341	71	65
62	9.882	0.169	0.050	2.78	85	1.0	-	9.63	-0.12	80	341	71	65
63	10.050	0.168	0.049	2.79	85	1.0	-	9.53	-0.10	80	339	71	65

BOX A TEST DATA - ASTM E2780 / ASTM E2515

Client: FPI
Model: I3000
Run #: 4

Job #: 23-229
Tracking #: 169
Technician: AK
Date: 11/30/2023

	Particulate Sampling Data							Fuel Weight (lb)		Temperature Data (°F)			
Elapsed Time (min)	Gas Meter (ft^3)	Sample Rate (cfm)	Dilution Tunnel dP (in H_2O)	Orifice dH (in H_2O)	Meter Temp (°F)	Meter Vacuum (in Hg)	Pro. Rate (%)	Scale Reading	Weight Change	Dilution Tunnel	Flue	Filter	Ambient
64	10.215	0.165	0.050	2.79	85	1.0	-	9.42	-0.11	80	338	71	65
65	10.381	0.166	0.049	2.79	86	1.0	-	9.31	-0.11	80	337	71	65
66	10.550	0.169	0.049	2.79	86	1.0	-	9.21	-0.10	80	335	71	65
67	10.714	0.164	0.049	2.80	86	1.0	-	9.11	-0.10	80	334	71	65
68	10.881	0.167	0.049	2.79	86	1.0	-	9.00	-0.11	80	333	71	65
69	11.048	0.167	0.050	2.80	86	1.0	-	8.91	-0.09	80	333	71	65
70	11.211	0.163	0.050	2.80	87	1.0	100	8.81	-0.10	80	332	71	65
71	11.378	0.167	0.049	2.79	87	1.0	-	8.70	-0.11	80	330	71	64
72	11.547	0.169	0.049	2.79	87	1.0	-	8.60	-0.10	80	332	71	63
73	11.715	0.168	0.049	2.81	87	1.0	-	8.50	-0.10	80	332	71	64
74	11.883	0.168	0.050	2.80	88	1.0	-	8.40	-0.10	80	332	71	65
75	12.051	0.168	0.050	2.81	88	1.0	-	8.29	-0.11	80	333	71	65
76	12.215	0.164	0.049	2.82	88	1.0	-	8.20	-0.09	80	331	71	65
77	12.385	0.170	0.049	2.81	88	1.0	-	8.11	-0.09	80	330	71	65
78	12.553	0.168	0.049	2.81	88	1.0	-	8.01	-0.10	80	329	71	65
79	12.718	0.165	0.049	2.81	88	1.0	-	7.92	-0.09	80	328	71	65
80	12.887	0.169	0.050	2.81	88	1.0	100	7.84	-0.08	80	324	71	65
81	13.057	0.170	0.049	2.81	89	1.0	-	7.76	-0.08	80	323	71	65
82	13.219	0.162	0.049	2.82	89	1.0	-	7.68	-0.08	79	324	71	65
83	13.387	0.168	0.049	2.81	89	1.0	-	7.60	-0.08	79	322	71	65
84	13.557	0.170	0.049	2.83	89	1.0	-	7.51	-0.09	79	322	71	65
85	13.725	0.168	0.049	2.82	89	1.0	-	7.44	-0.07	79	322	71	65
86	13.892	0.167	0.049	2.83	89	1.0	-	7.37	-0.07	79	322	71	65
87	14.064	0.172	0.050	2.83	89	1.0	-	7.29	-0.08	79	321	71	65
88	14.231	0.167	0.049	2.82	89	1.0	-	7.21	-0.08	79	319	71	65
89	14.396	0.165	0.049	2.83	90	1.0	-	7.14	-0.07	79	318	71	65
90	14.565	0.169	0.049	2.84	90	1.0	100	7.06	-0.08	79	318	71	65
91	14.733	0.168	0.049	2.83	90	1.0	-	6.99	-0.07	79	319	71	65
92	14.901	0.168	0.049	2.83	90	1.0	-	6.91	-0.08	79	318	71	65
93	15.071	0.170	0.049	2.83	90	1.0	-	6.83	-0.08	79	317	71	65
94	15.242	0.171	0.050	2.84	90	1.0	-	6.76	-0.07	79	318	71	65
95	15.404	0.162	0.048	2.83	90	1.0	-	6.69	-0.07	79	316	71	65

BOX A TEST DATA - ASTM E2780 / ASTM E2515

Client: FPI
Model: I3000
Run #: 4

Job #: 23-229
Tracking #: 169
Technician: AK
Date: 11/30/2023

	Particulate Sampling Data							Fuel Weight (lb)		Temperature Data (°F)			
Elapsed Time (min)	Gas Meter (ft^3)	Sample Rate (cfm)	Dilution Tunnel dP (in H_2O)	Orifice dH (in H_2O)	Meter Temp (°F)	Meter Vacuum (in Hg)	Pro. Rate (%)	Scale Reading	Weight Change	Dilution Tunnel	Flue	Filter	Ambient
96	15.576	0.172	0.048	2.84	90	1.0	-	6.62	-0.07	79	315	71	65
97	15.746	0.170	0.049	2.84	91	1.0	-	6.56	-0.06	79	315	71	65
98	15.910	0.164	0.049	2.84	91	1.0	-	6.49	-0.07	79	315	71	65
99	16.079	0.169	0.049	2.84	91	1.0	-	6.43	-0.06	79	312	71	65
100	16.252	0.173	0.049	2.83	91	1.0	101	6.37	-0.06	79	311	71	65
101	16.419	0.167	0.049	2.84	91	1.0	-	6.30	-0.07	78	309	71	65
102	16.586	0.167	0.049	2.84	91	1.0	-	6.24	-0.06	79	307	71	65
103	16.757	0.171	0.049	2.84	91	1.0	-	6.18	-0.06	78	308	71	65
104	16.923	0.166	0.049	2.83	91	1.0	-	6.12	-0.06	78	307	71	65
105	17.091	0.168	0.049	2.84	91	1.0	-	6.06	-0.06	78	304	71	65
106	17.266	0.175	0.050	2.84	91	1.0	-	5.99	-0.07	78	303	71	65
107	17.432	0.166	0.048	2.85	92	1.0	-	5.94	-0.05	78	303	71	65
108	17.598	0.166	0.049	2.85	92	1.0	-	5.88	-0.06	78	303	71	65
109	17.772	0.174	0.049	2.84	92	1.0	-	5.82	-0.06	78	302	71	65
110	17.940	0.168	0.049	2.85	92	1.0	101	5.75	-0.07	78	302	71	65
111	18.110	0.170	0.049	2.84	92	1.0	-	5.70	-0.05	78	302	71	65
112	18.277	0.167	0.049	2.84	92	1.0	-	5.64	-0.06	78	300	71	65
113	18.448	0.171	0.048	2.85	92	1.0	-	5.58	-0.06	78	299	71	65
114	18.618	0.170	0.049	2.86	92	1.0	-	5.52	-0.06	78	299	71	65
115	18.786	0.168	0.049	2.86	92	1.0	-	5.47	-0.05	78	298	71	65
116	18.957	0.171	0.049	2.85	92	1.0	-	5.41	-0.06	78	300	71	65
117	19.128	0.171	0.049	2.85	92	1.0	-	5.35	-0.06	78	298	71	65
118	19.292	0.164	0.048	2.85	92	1.0	-	5.30	-0.05	78	297	71	65
119	19.465	0.173	0.049	2.85	93	1.0	-	5.24	-0.06	78	296	71	65
120	19.638	0.173	0.049	2.85	93	1.0	101	5.18	-0.06	78	297	71	65
121	19.802	0.164	0.049	2.86	93	1.0	-	5.12	-0.06	78	297	71	65
122	19.972	0.170	0.049	2.84	93	1.0	-	5.07	-0.05	78	295	71	65
123	20.144	0.172	0.049	2.86	93	1.0	-	5.02	-0.05	78	294	71	65
124	20.311	0.167	0.050	2.86	93	1.0	-	4.96	-0.06	78	292	71	65
125	20.485	0.174	0.049	2.86	93	1.0	-	4.91	-0.05	78	293	71	65
126	20.654	0.169	0.048	2.85	93	1.0	-	4.85	-0.06	78	292	71	65
127	20.825	0.171	0.049	2.84	93	1.0	-	4.80	-0.05	78	292	71	65

BOX A TEST DATA - ASTM E2780 / ASTM E2515

Client: FPI
Model: I3000
Run #: 4

Job #: 23-229
Tracking #: 169
Technician: AK
Date: 11/30/2023

	Particulate Sampling Data							Fuel Weight (lb)		Temperature Data (°F)			
Elapsed Time (min)	Gas Meter (ft^3)	Sample Rate (cfm)	Dilution Tunnel dP (in H_2O)	Orifice dH (in H_2O)	Meter Temp (°F)	Meter Vacuum (in Hg)	Pro. Rate (%)	Scale Reading	Weight Change	Dilution Tunnel	Flue	Filter	Ambient
128	20.990	0.165	0.049	2.86	93	1.0	-	4.75	-0.05	78	292	71	65
129	21.163	0.173	0.049	2.87	93	1.0	-	4.69	-0.06	78	291	71	65
130	21.333	0.170	0.049	2.85	93	1.0	101	4.63	-0.06	78	290	71	65
131	21.500	0.167	0.049	2.87	93	1.0	-	4.59	-0.04	77	291	71	65
132	21.671	0.171	0.049	2.86	93	1.0	-	4.55	-0.04	77	289	71	65
133	21.845	0.174	0.049	2.86	93	1.0	-	4.50	-0.05	77	289	70	65
134	22.013	0.168	0.049	2.86	94	1.0	-	4.45	-0.05	77	288	70	65
135	22.182	0.169	0.050	2.86	94	1.0	-	4.41	-0.04	77	286	70	65
136	22.357	0.175	0.049	2.85	94	1.0	-	4.37	-0.04	77	284	70	65
137	22.522	0.165	0.049	2.87	94	1.0	-	4.32	-0.05	77	283	70	65
138	22.693	0.171	0.049	2.86	94	1.0	-	4.29	-0.03	77	283	70	65
139	22.866	0.173	0.049	2.86	94	1.0	-	4.25	-0.04	77	282	70	65
140	23.037	0.171	0.050	2.88	94	1.0	100	4.20	-0.05	77	282	70	65
141	23.205	0.168	0.049	2.87	94	1.1	-	4.16	-0.04	77	281	70	65
142	23.376	0.171	0.049	2.87	94	1.0	-	4.12	-0.04	77	279	70	65
143	23.545	0.169	0.049	2.86	94	1.0	-	4.09	-0.03	77	279	70	65
144	23.716	0.171	0.049	2.87	94	1.0	-	4.04	-0.05	77	279	70	65
145	23.883	0.167	0.049	2.87	94	1.0	-	4.00	-0.04	77	279	70	65
146	24.059	0.176	0.049	2.87	94	1.0	-	3.96	-0.04	77	278	70	65
147	24.226	0.167	0.050	2.87	94	1.0	-	3.91	-0.05	77	275	70	65
148	24.396	0.170	0.050	2.86	94	1.0	-	3.87	-0.04	77	277	70	65
149	24.566	0.170	0.049	2.86	94	1.0	-	3.82	-0.05	77	278	70	65
150	24.737	0.171	0.050	2.86	94	1.0	100	3.77	-0.05	77	277	70	65
151	24.906	0.169	0.049	2.87	94	1.0	-	3.72	-0.05	77	278	70	65
152	25.079	0.173	0.049	2.87	94	1.0	-	3.67	-0.05	77	279	70	65
153	25.252	0.173	0.050	2.86	94	1.0	-	3.62	-0.05	77	280	70	65
154	25.417	0.165	0.049	2.86	94	1.0	-	3.57	-0.05	77	280	70	65
155	25.589	0.172	0.049	2.87	94	1.0	-	3.52	-0.05	77	281	70	65
156	25.760	0.171	0.049	2.88	94	1.0	-	3.47	-0.05	77	281	70	65
157	25.931	0.171	0.049	2.87	95	1.0	-	3.43	-0.04	77	280	70	65
158	26.102	0.171	0.050	2.87	95	1.0	-	3.39	-0.04	77	281	70	65
159	26.273	0.171	0.050	2.87	95	1.0	-	3.35	-0.04	77	278	70	65

BOX A TEST DATA - ASTM E2780 / ASTM E2515

Client: FPI
Model: I3000
Run #: 4

Job #: 23-229
Tracking #: 169
Technician: AK
Date: 11/30/2023

	Particulate Sampling Data							Fuel Weight (lb)		Temperature Data (°F)			
Elapsed Time (min)	Gas Meter (ft^3)	Sample Rate (cfm)	Dilution Tunnel dP (in H_2O)	Orifice dH (in H_2O)	Meter Temp (°F)	Meter Vacuum (in Hg)	Pro. Rate (%)	Scale Reading	Weight Change	Dilution Tunnel	Flue	Filter	Ambient
160	26.442	0.169	0.049	2.88	95	1.0	100	3.31	-0.04	77	278	70	65
161	26.614	0.172	0.049	2.88	95	1.0	-	3.26	-0.05	77	276	70	65
162	26.782	0.168	0.049	2.88	95	1.0	-	3.23	-0.03	77	275	70	65
163	26.958	0.176	0.050	2.88	95	1.0	-	3.20	-0.03	77	276	70	65
164	27.128	0.170	0.049	2.87	95	1.0	-	3.17	-0.03	77	275	70	65
165	27.293	0.165	0.049	2.87	95	1.0	-	3.13	-0.04	77	275	70	65
166	27.468	0.175	0.049	2.88	95	1.0	-	3.10	-0.03	76	273	70	65
167	27.637	0.169	0.049	2.88	95	1.0	-	3.08	-0.02	77	271	70	65
168	27.806	0.169	0.049	2.88	95	1.1	-	3.04	-0.04	76	270	70	65
169	27.980	0.174	0.049	2.87	95	1.1	-	3.01	-0.03	76	270	70	65
170	28.153	0.173	0.049	2.88	95	1.0	101	2.99	-0.02	76	268	70	65
171	28.320	0.167	0.049	2.86	95	1.0	-	2.96	-0.03	76	268	70	65
172	28.491	0.171	0.049	2.87	95	1.0	-	2.93	-0.03	76	267	70	65
173	28.663	0.172	0.049	2.88	95	1.0	-	2.90	-0.03	76	267	70	65
174	28.833	0.170	0.049	2.88	95	1.0	-	2.88	-0.02	76	265	70	65
175	29.004	0.171	0.049	2.87	95	1.0	-	2.85	-0.03	76	264	70	65
176	29.176	0.172	0.050	2.88	95	1.0	-	2.82	-0.03	76	263	70	65
177	29.346	0.170	0.049	2.88	95	1.0	-	2.80	-0.02	76	262	70	65
178	29.517	0.171	0.049	2.88	95	1.0	-	2.77	-0.03	76	261	70	65
179	29.686	0.169	0.049	2.88	95	1.0	-	2.75	-0.02	76	259	70	65
180	29.859	0.173	0.049	2.88	95	1.0	101	2.72	-0.03	76	259	70	65
181	30.032	0.173	0.048	2.88	95	1.0	-	2.70	-0.02	76	259	70	65
182	30.200	0.168	0.049	2.88	95	1.0	-	2.67	-0.03	76	259	70	65
183	30.372	0.172	0.049	2.88	95	1.0	-	2.65	-0.02	76	257	70	65
184	30.541	0.169	0.049	2.88	95	1.0	-	2.62	-0.03	76	255	70	65
185	30.710	0.169	0.049	2.88	95	1.0	-	2.60	-0.02	76	255	70	65
186	30.883	0.173	0.050	2.89	95	1.0	-	2.57	-0.03	76	255	70	65
187	31.055	0.172	0.049	2.89	95	1.0	-	2.56	-0.01	76	254	70	65
188	31.229	0.174	0.049	2.89	95	1.1	-	2.53	-0.03	76	255	70	65
189	31.397	0.168	0.049	2.87	95	1.0	-	2.50	-0.03	76	255	70	65
190	31.565	0.168	0.049	2.88	95	1.0	101	2.48	-0.02	76	254	70	65
191	31.738	0.173	0.049	2.88	95	1.0	-	2.45	-0.03	76	251	70	65

BOX A TEST DATA - ASTM E2780 / ASTM E2515

Client: FPI
Model: I3000
Run #: 4

Job #: 23-229
Tracking #: 169
Technician: AK
Date: 11/30/2023

	Particulate Sampling Data							Fuel Weight (lb)		Temperature Data (°F)			
Elapsed Time (min)	Gas Meter (ft^3)	Sample Rate (cfm)	Dilution Tunnel dP (in H_2O)	Orifice dH (in H_2O)	Meter Temp (°F)	Meter Vacuum (in Hg)	Pro. Rate (%)	Scale Reading	Weight Change	Dilution Tunnel	Flue	Filter	Ambient
192	31.906	0.168	0.049	2.88	95	1.0	-	2.43	-0.02	76	251	70	65
193	32.080	0.174	0.050	2.88	95	1.0	-	2.40	-0.03	75	251	70	65
194	32.251	0.171	0.050	2.89	95	1.0	-	2.38	-0.02	75	251	70	65
195	32.422	0.171	0.050	2.88	95	1.0	-	2.35	-0.03	75	250	70	65
196	32.590	0.168	0.050	2.88	95	1.0	-	2.32	-0.03	75	249	70	65
197	32.765	0.175	0.050	2.87	95	1.0	-	2.30	-0.02	75	247	70	65
198	32.935	0.170	0.049	2.89	95	1.0	-	2.29	-0.01	75	246	70	65
199	33.104	0.169	0.049	2.88	95	1.0	-	2.27	-0.02	75	244	70	65
200	33.276	0.172	0.049	2.88	95	1.0	101	2.24	-0.03	75	244	70	65
201	33.452	0.176	0.049	2.88	95	1.0	-	2.22	-0.02	75	242	70	65
202	33.619	0.167	0.049	2.88	95	1.0	-	2.20	-0.02	75	242	70	65
203	33.787	0.168	0.049	2.88	95	1.0	-	2.18	-0.02	75	241	70	65
204	33.963	0.176	0.048	2.88	96	1.0	-	2.16	-0.02	75	241	70	65
205	34.133	0.170	0.049	2.88	96	1.0	-	2.14	-0.02	75	240	70	65
206	34.302	0.169	0.049	2.89	96	1.1	-	2.12	-0.02	75	241	70	64
207	34.474	0.172	0.048	2.88	96	1.0	-	2.10	-0.02	75	239	70	65
208	34.650	0.176	0.049	2.88	96	1.0	-	2.08	-0.02	75	238	70	64
209	34.817	0.167	0.049	2.87	96	1.0	-	2.06	-0.02	75	238	70	64
210	34.985	0.168	0.048	2.87	96	1.0	101	2.03	-0.03	74	239	70	64
211	35.158	0.173	0.049	2.89	96	1.0	-	2.01	-0.02	74	238	70	64
212	35.334	0.176	0.049	2.88	96	1.1	-	2.00	-0.01	74	238	70	64
213	35.502	0.168	0.049	2.89	96	1.0	-	1.98	-0.02	74	237	70	64
214	35.672	0.170	0.049	2.89	96	1.0	-	1.96	-0.02	74	237	70	64
215	35.845	0.173	0.050	2.89	96	1.0	-	1.93	-0.03	74	236	70	64
216	36.018	0.173	0.049	2.88	96	1.1	-	1.92	-0.01	74	236	70	64
217	36.183	0.165	0.049	2.88	96	1.0	-	1.90	-0.02	74	235	70	65
218	36.359	0.176	0.049	2.89	96	1.0	-	1.88	-0.02	74	234	70	64
219	36.532	0.173	0.049	2.89	96	1.0	-	1.86	-0.02	74	236	70	64
220	36.699	0.167	0.049	2.89	96	1.0	101	1.84	-0.02	74	235	70	65
221	36.870	0.171	0.049	2.89	96	1.0	-	1.82	-0.02	74	235	70	64
222	37.044	0.174	0.049	2.88	96	1.0	-	1.80	-0.02	74	234	70	65
223	37.213	0.169	0.049	2.89	96	1.0	-	1.78	-0.02	74	233	70	65

BOX A TEST DATA - ASTM E2780 / ASTM E2515

Client: FPI
Model: I3000
Run #: 4

Job #: 23-229
Tracking #: 169
Technician: AK
Date: 11/30/2023

	Particulate Sampling Data							Fuel Weight (lb)		Temperature Data (°F)			
Elapsed Time (min)	Gas Meter (ft^3)	Sample Rate (cfm)	Dilution Tunnel dP (in H_2O)	Orifice dH (in H_2O)	Meter Temp (°F)	Meter Vacuum (in Hg)	Pro. Rate (%)	Scale Reading	Weight Change	Dilution Tunnel	Flue	Filter	Ambient
224	37.382	0.169	0.049	2.88	96	1.0	-	1.76	-0.02	74	232	69	65
225	37.556	0.174	0.049	2.89	96	1.0	-	1.74	-0.02	74	231	70	65
226	37.731	0.175	0.048	2.89	96	1.0	-	1.72	-0.02	74	231	69	65
227	37.900	0.169	0.049	2.89	96	1.0	-	1.70	-0.02	74	231	69	65
228	38.072	0.172	0.049	2.89	96	1.0	-	1.69	-0.01	74	232	69	65
229	38.242	0.170	0.048	2.90	96	1.0	-	1.67	-0.02	74	231	69	65
230	38.411	0.169	0.049	2.89	96	1.0	101	1.65	-0.02	74	231	69	65
231	38.580	0.169	0.048	2.89	96	1.0	-	1.63	-0.02	74	231	69	65
232	38.754	0.174	0.049	2.89	96	1.0	-	1.61	-0.02	74	231	69	65
233	38.927	0.173	0.050	2.89	96	1.0	-	1.59	-0.02	74	231	69	65
234	39.096	0.169	0.049	2.89	96	1.0	-	1.57	-0.02	74	231	69	64
235	39.271	0.175	0.049	2.89	96	1.0	-	1.55	-0.02	74	231	69	64
236	39.444	0.173	0.049	2.88	96	1.0	-	1.54	-0.01	74	231	69	64
237	39.614	0.170	0.049	2.88	96	1.0	-	1.52	-0.02	74	231	69	65
238	39.782	0.168	0.049	2.88	96	1.0	-	1.50	-0.02	74	230	69	64
239	39.955	0.173	0.049	2.89	96	1.0	-	1.49	-0.01	74	228	69	65
240	40.128	0.173	0.049	2.89	96	1.0	101	1.47	-0.02	74	227	69	65
241	40.297	0.169	0.049	2.88	96	1.0	-	1.45	-0.02	74	228	69	65
242	40.469	0.172	0.050	2.89	96	1.0	-	1.43	-0.02	74	227	69	65
243	40.643	0.174	0.049	2.90	96	1.0	-	1.42	-0.01	74	227	69	64
244	40.809	0.166	0.050	2.88	96	1.0	-	1.40	-0.02	74	227	69	64
245	40.978	0.169	0.049	2.88	96	1.0	-	1.38	-0.02	73	227	69	64
246	41.152	0.174	0.049	2.89	96	1.0	-	1.37	-0.01	73	225	69	65
247	41.324	0.172	0.049	2.90	96	1.0	-	1.35	-0.02	73	225	69	64
248	41.494	0.170	0.050	2.88	96	1.0	-	1.33	-0.02	73	225	69	65
249	41.665	0.171	0.049	2.89	96	1.0	-	1.31	-0.02	73	225	69	64
250	41.841	0.176	0.049	2.89	96	1.0	101	1.30	-0.01	73	225	69	64
251	42.011	0.170	0.050	2.88	96	1.0	-	1.29	-0.01	73	225	69	65
252	42.180	0.169	0.049	2.88	96	1.0	-	1.27	-0.02	73	225	69	64
253	42.353	0.173	0.049	2.89	96	1.0	-	1.25	-0.02	73	225	69	64
254	42.524	0.171	0.050	2.90	96	1.0	-	1.23	-0.02	73	225	69	64
255	42.695	0.171	0.049	2.88	96	1.1	-	1.22	-0.01	73	224	69	64

BOX A TEST DATA - ASTM E2780 / ASTM E2515

Client: FPI
Model: I3000
Run #: 4

Job #: 23-229
Tracking #: 169
Technician: AK
Date: 11/30/2023

	Particulate Sampling Data							Fuel Weight (lb)		Temperature Data (°F)			
Elapsed Time (min)	Gas Meter (ft^3)	Sample Rate (cfm)	Dilution Tunnel dP (in H_2O)	Orifice dH (in H_2O)	Meter Temp (°F)	Meter Vacuum (in Hg)	Pro. Rate (%)	Scale Reading	Weight Change	Dilution Tunnel	Flue	Filter	Ambient
256	42.864	0.169	0.050	2.89	96	1.0	-	1.20	-0.02	73	223	69	64
257	43.037	0.173	0.050	2.88	96	1.0	-	1.18	-0.02	73	224	69	64
258	43.206	0.169	0.050	2.87	96	1.0	-	1.17	-0.01	73	223	69	64
259	43.376	0.170	0.050	2.88	96	1.1	-	1.16	-0.01	73	222	69	64
260	43.550	0.174	0.050	2.89	96	1.0	100	1.13	-0.03	73	221	69	64
261	43.723	0.173	0.050	2.89	96	1.0	-	1.12	-0.01	73	221	69	64
262	43.892	0.169	0.049	2.89	96	1.0	-	1.10	-0.02	73	221	69	64
263	44.063	0.171	0.049	2.89	96	1.0	-	1.09	-0.01	73	220	69	64
264	44.236	0.173	0.050	2.89	96	1.0	-	1.07	-0.02	73	219	69	64
265	44.405	0.169	0.049	2.88	96	1.0	-	1.06	-0.01	73	219	69	64
266	44.575	0.170	0.049	2.88	96	1.0	-	1.04	-0.02	73	220	69	64
267	44.748	0.173	0.050	2.89	96	1.0	-	1.03	-0.01	73	221	69	64
268	44.923	0.175	0.050	2.89	96	1.0	-	1.01	-0.02	73	220	69	64
269	45.090	0.167	0.050	2.89	96	1.0	-	0.99	-0.02	73	221	69	64
270	45.262	0.172	0.049	2.88	96	1.0	100	0.98	-0.01	73	220	69	64
271	45.435	0.173	0.050	2.89	96	1.0	-	0.96	-0.02	73	219	69	64
272	45.604	0.169	0.049	2.88	96	1.0	-	0.94	-0.02	73	219	69	64
273	45.776	0.172	0.049	2.88	96	1.0	-	0.92	-0.02	73	218	69	64
274	45.950	0.174	0.049	2.89	95	1.0	-	0.91	-0.01	73	218	68	64
275	46.123	0.173	0.049	2.89	95	1.1	-	0.90	-0.01	73	218	68	64
276	46.289	0.166	0.050	2.89	95	1.0	-	0.88	-0.02	73	218	68	64
277	46.464	0.175	0.049	2.88	95	1.1	-	0.87	-0.01	72	217	68	64
278	46.637	0.173	0.049	2.89	95	1.0	-	0.86	-0.01	72	218	68	64
279	46.803	0.166	0.050	2.89	95	1.0	-	0.84	-0.02	72	218	68	64
280	46.973	0.170	0.049	2.89	95	1.0	101	0.82	-0.02	72	217	68	64
281	47.146	0.173	0.049	2.88	95	1.0	-	0.81	-0.01	72	216	68	64
282	47.319	0.173	0.049	2.89	95	1.0	-	0.80	-0.01	72	215	68	64
283	47.488	0.169	0.049	2.89	95	1.0	-	0.78	-0.02	72	215	68	64
284	47.662	0.174	0.049	2.88	95	1.0	-	0.76	-0.02	72	215	68	64
285	47.836	0.174	0.049	2.87	95	1.0	-	0.75	-0.01	72	214	68	64
286	48.001	0.165	0.049	2.87	95	1.0	-	0.74	-0.01	72	214	68	64
287	48.172	0.171	0.049	2.88	95	1.0	-	0.72	-0.02	72	214	68	63

BOX A TEST DATA - ASTM E2780 / ASTM E2515

Client: FPI
Model: I3000
Run #: 4

Job #: 23-229
Tracking #: 169
Technician: AK
Date: 11/30/2023

	Particulate Sampling Data							Fuel Weight (lb)		Temperature Data (°F)			
Elapsed Time (min)	Gas Meter (ft^3)	Sample Rate (cfm)	Dilution Tunnel dP (in H_2O)	Orifice dH (in H_2O)	Meter Temp (°F)	Meter Vacuum (in Hg)	Pro. Rate (%)	Scale Reading	Weight Change	Dilution Tunnel	Flue	Filter	Ambient
288	48.348	0.176	0.049	2.88	95	1.0	-	0.71	-0.01	72	214	68	64
289	48.518	0.170	0.049	2.89	95	1.0	-	0.70	-0.01	72	214	68	63
290	48.686	0.168	0.049	2.88	95	1.0	101	0.68	-0.02	72	213	68	63
291	48.859	0.173	0.049	2.88	95	1.0	-	0.66	-0.02	72	212	68	63
292	49.034	0.175	0.050	2.88	95	1.0	-	0.65	-0.01	72	212	68	63
293	49.204	0.170	0.049	2.88	95	1.0	-	0.64	-0.01	72	211	68	63
294	49.373	0.169	0.049	2.90	95	1.0	-	0.62	-0.02	72	211	68	63
295	49.544	0.171	0.049	2.88	95	1.0	-	0.61	-0.01	72	211	68	63
296	49.717	0.173	0.050	2.88	95	1.0	-	0.59	-0.02	72	210	68	63
297	49.888	0.171	0.050	2.89	95	1.0	-	0.58	-0.01	72	210	68	63
298	50.057	0.169	0.049	2.89	95	1.0	-	0.57	-0.01	72	209	68	63
299	50.233	0.176	0.049	2.88	95	1.0	-	0.55	-0.02	72	209	68	63
300	50.402	0.169	0.050	2.88	95	1.0	100	0.54	-0.01	72	209	68	63
301	50.571	0.169	0.049	2.88	95	1.0	-	0.53	-0.01	72	208	68	63
302	50.745	0.174	0.050	2.88	95	1.0	-	0.51	-0.02	72	208	68	63
303	50.915	0.170	0.049	2.89	95	1.0	-	0.50	-0.01	72	208	68	63
304	51.087	0.172	0.050	2.88	95	1.0	-	0.48	-0.02	71	208	68	63
305	51.255	0.168	0.050	2.88	95	1.0	-	0.47	-0.01	71	208	68	63
306	51.428	0.173	0.050	2.88	95	1.0	-	0.46	-0.01	71	207	68	63
307	51.600	0.172	0.049	2.88	95	1.0	-	0.44	-0.02	71	206	68	63
308	51.770	0.170	0.049	2.88	95	1.0	-	0.43	-0.01	71	206	68	63
309	51.941	0.171	0.049	2.89	95	1.0	-	0.42	-0.01	71	207	68	63
310	52.113	0.172	0.049	2.88	95	1.1	100	0.40	-0.02	71	206	68	63
311	52.281	0.168	0.050	2.88	95	1.1	-	0.38	-0.02	71	205	68	63
312	52.453	0.172	0.049	2.89	95	1.0	-	0.37	-0.01	71	206	68	63
313	52.626	0.173	0.049	2.88	95	1.0	-	0.35	-0.02	71	205	68	63
314	52.798	0.172	0.050	2.88	95	1.0	-	0.34	-0.01	71	205	68	63
315	52.968	0.170	0.049	2.89	95	1.1	-	0.33	-0.01	71	206	68	63
316	53.140	0.172	0.049	2.88	95	1.0	-	0.31	-0.02	71	206	68	63
317	53.311	0.171	0.049	2.87	95	1.0	-	0.30	-0.01	71	205	68	63
318	53.482	0.171	0.049	2.88	95	1.0	-	0.29	-0.01	71	204	67	63
319	53.652	0.170	0.048	2.88	95	1.0	-	0.28	-0.01	72	204	67	63

BOX A TEST DATA - ASTM E2780 / ASTM E2515

Client: FPI
Model: I3000
Run #: 4

Job #: 23-229
Tracking #: 169
Technician: AK
Date: 11/30/2023

	Particulate Sampling Data							Fuel Weight (lb)		Temperature Data (°F)			
Elapsed Time (min)	Gas Meter (ft^3)	Sample Rate (cfm)	Dilution Tunnel dP (in H_2O)	Orifice dH (in H_2O)	Meter Temp (°F)	Meter Vacuum (in Hg)	Pro. Rate (%)	Scale Reading	Weight Change	Dilution Tunnel	Flue	Filter	Ambient
320	53.827	0.175	0.049	2.87	95	1.0	101	0.26	-0.02	72	203	67	63
321	53.993	0.166	0.049	2.90	95	1.0	-	0.25	-0.01	72	203	68	63
322	54.164	0.171	0.048	2.88	95	1.1	-	0.23	-0.02	72	203	67	63
323	54.338	0.174	0.048	2.88	95	1.0	-	0.22	-0.01	72	204	68	63
324	54.508	0.170	0.048	2.88	95	1.0	-	0.20	-0.02	72	203	67	63
325	54.676	0.168	0.049	2.87	95	1.0	-	0.19	-0.01	71	203	67	63
326	54.851	0.175	0.049	2.87	95	1.0	-	0.17	-0.02	71	202	67	63
327	55.021	0.170	0.049	2.89	95	1.0	-	0.16	-0.01	71	203	67	63
328	55.189	0.168	0.049	2.87	95	1.0	-	0.14	-0.02	71	203	67	63
329	55.361	0.172	0.049	2.88	95	1.0	-	0.12	-0.02	71	202	67	63
330	55.535	0.174	0.049	2.88	95	1.0	100	0.11	-0.01	71	202	67	63
331	55.708	0.173	0.049	2.88	95	1.0	-	0.10	-0.01	71	202	67	63
332	55.876	0.168	0.049	2.88	95	1.0	-	0.08	-0.02	71	201	67	63
333	56.045	0.169	0.049	2.88	95	1.0	-	0.07	-0.01	71	201	67	63
334	56.221	0.176	0.049	2.87	95	1.0	-	0.05	-0.02	71	201	67	63
335	56.390	0.169	0.049	2.88	95	1.0	-	0.03	-0.02	71	201	67	63
336	56.561	0.171	0.049	2.89	95	1.0	-	0.02	-0.01	71	201	67	63
337	56.735	0.174	0.049	2.89	95	1.0	101	0.00	-0.02	71	201	67	63
Avg/Tot	56.739	0.168	0.049	2.82	90.6	1.0	100			76.3	269.9	69.7	64.5

BOX B TEST DATA - ASTM E2780 / ASTM E2515

Client: FPI
Model: I3000
Run #: 4

Job #: 23-229
Tracking #: 169
Technician: AK
Date: 11/30/2023

	Particulate Sampling Data							Flue Gas Data		
Elapsed Time (min)	Gas Meter (ft^3)	Sample Rate (cfm)	Orifice dH (in H_2O)	Meter Temp (°F)	Meter Vacuum (in Hg)	Pro. Rate (%)	Filter (°F)	Flue Draft (in H_2O)	CO_2 (%)	CO (%)
0	-0.005		1.29	71	1.9		71	-0.059	5.42	0.025
1	0.115	0.120	2.80	70	1.9	-	72	-0.061	1.88	0.047
2	0.273	0.158	2.80	70	1.9	-	72	-0.066	6.68	0.111
3	0.438	0.165	2.78	70	1.6	-	72	-0.071	11.04	0.174
4	0.599	0.161	2.78	70	1.6	-	73	-0.077	11.87	0.197
5	0.761	0.162	2.79	71	1.6	-	73	-0.078	12.41	0.189
6	0.926	0.165	2.80	71	1.6	-	73	-0.070	10.21	0.062
7	1.087	0.161	2.79	71	2.1	-	73	-0.067	7.19	0.025
8	1.248	0.161	2.79	71	2.0	-	73	-0.068	7.21	0.029
9	1.413	0.165	2.81	71	1.6	-	73	-0.066	7.55	0.030
10	1.573	0.160	2.80	71	1.9	97	73	-0.065	8.29	0.039
11	1.737	0.164	2.80	71	2.0	-	73	-0.067	9.15	0.048
12	1.900	0.163	2.80	72	1.5	-	73	-0.066	9.40	0.049
13	2.061	0.161	2.80	72	1.6	-	73	-0.068	9.43	0.059
14	2.224	0.163	2.80	72	1.8	-	73	-0.067	9.43	0.059
15	2.387	0.163	2.81	72	2.1	-	73	-0.070	9.32	0.054
16	2.546	0.159	2.81	73	2.1	-	73	-0.070	9.44	0.063
17	2.714	0.168	2.81	73	1.7	-	73	-0.069	9.53	0.055
18	2.875	0.161	2.81	73	1.5	-	73	-0.069	9.85	0.059
19	3.039	0.164	2.81	73	1.5	-	73	-0.070	10.31	0.068
20	3.205	0.166	2.82	74	2.1	100	73	-0.070	10.76	0.088
21	3.367	0.162	2.81	74	1.9	-	73	-0.071	11.02	0.121
22	3.530	0.163	2.81	75	1.6	-	73	-0.068	10.62	0.062
23	3.696	0.166	2.82	75	1.6	-	73	-0.072	10.58	0.069
24	3.857	0.161	2.81	75	1.5	-	73	-0.072	11.23	0.278
25	4.022	0.165	2.83	75	1.7	-	73	-0.071	11.84	0.772
26	4.188	0.166	2.83	76	1.7	-	73	-0.071	11.71	0.200
27	4.350	0.162	2.82	76	1.5	-	73	-0.071	12.15	0.118
28	4.515	0.165	2.82	76	1.8	-	74	-0.072	11.57	0.326
29	4.680	0.165	2.83	77	1.8	-	74	-0.071	11.38	0.111
30	4.842	0.162	2.83	77	1.6	100	74	-0.070	11.19	0.111
31	5.008	0.166	2.83	77	1.5	-	74	-0.072	10.89	0.186

BOX B TEST DATA - ASTM E2780 / ASTM E2515

Client: FPI
Model: I3000
Run #: 4

Job #: 23-229
Tracking #: 169
Technician: AK
Date: 11/30/2023

	Particulate Sampling Data							Flue Gas Data		
Elapsed Time (min)	Gas Meter (ft^3)	Sample Rate (cfm)	Orifice dH (in H_2O)	Meter Temp (°F)	Meter Vacuum (in Hg)	Pro. Rate (%)	Filter (°F)	Flue Draft (in H_2O)	CO_2 (%)	CO (%)
32	5.174	0.166	2.83	78	1.6	-	73	-0.071	11.18	0.150
33	5.337	0.163	2.84	78	1.6	-	73	-0.073	11.31	0.729
34	5.503	0.166	2.84	78	1.6	-	73	-0.072	11.50	0.702
35	5.668	0.165	2.83	78	1.8	-	73	-0.072	11.85	0.453
36	5.832	0.164	2.85	78	1.5	-	73	-0.070	11.89	0.289
37	5.998	0.166	2.84	79	2.0	-	73	-0.071	11.86	0.427
38	6.164	0.166	2.84	79	1.9	-	73	-0.071	12.15	0.429
39	6.326	0.162	2.85	79	1.5	-	73	-0.070	12.09	0.430
40	6.492	0.166	2.85	80	2.1	101	73	-0.072	12.17	0.359
41	6.658	0.166	2.86	80	1.8	-	73	-0.071	12.19	0.233
42	6.825	0.167	2.85	80	1.9	-	73	-0.072	12.27	0.204
43	6.992	0.167	2.86	80	1.5	-	73	-0.072	12.15	0.218
44	7.159	0.167	2.86	81	2.0	-	73	-0.069	12.32	0.304
45	7.323	0.164	2.86	81	1.7	-	73	-0.071	12.37	0.189
46	7.491	0.168	2.87	81	1.8	-	73	-0.071	12.33	0.147
47	7.658	0.167	2.86	81	1.8	-	73	-0.071	12.30	0.142
48	7.822	0.164	2.86	82	1.8	-	73	-0.071	12.22	0.211
49	7.989	0.167	2.86	82	1.7	-	73	-0.071	12.03	0.405
50	8.158	0.169	2.86	82	1.6	101	73	-0.072	12.20	0.516
51	8.322	0.164	2.86	83	2.0	-	73	-0.073	12.17	0.713
52	8.489	0.167	2.86	83	2.0	-	73	-0.074	12.09	0.778
53	8.658	0.169	2.87	83	1.8	-	73	-0.069	12.10	0.739
54	8.824	0.166	2.86	83	1.7	-	73	-0.071	12.23	0.638
55	8.988	0.164	2.86	84	1.6	-	73	-0.069	12.35	0.615
56	9.157	0.169	2.86	84	1.8	-	73	-0.071	12.04	0.757
57	9.325	0.168	2.88	84	1.5	-	73	-0.072	12.25	0.273
58	9.490	0.165	2.87	84	1.6	-	73	-0.070	12.17	0.163
59	9.658	0.168	2.86	85	1.6	-	73	-0.071	11.95	0.113
60	9.824	0.166	2.88	85	1.7	100	73	-0.071	11.71	0.197
61	9.989	0.165	2.87	85	1.5	-	73	-0.071	11.59	0.185
62	10.160	0.171	2.87	85	1.8	-	73	-0.069	11.56	0.313
63	10.328	0.168	2.87	85	1.7	-	73	-0.069	11.48	0.443

BOX B TEST DATA - ASTM E2780 / ASTM E2515

Client: FPI
Model: I3000
Run #: 4

Job #: 23-229
Tracking #: 169
Technician: AK
Date: 11/30/2023

	Particulate Sampling Data							Flue Gas Data		
Elapsed Time (min)	Gas Meter (ft^3)	Sample Rate (cfm)	Orifice dH (in H_2O)	Meter Temp (°F)	Meter Vacuum (in Hg)	Pro. Rate (%)	Filter (°F)	Flue Draft (in H_2O)	CO_2 (%)	CO (%)
64	10.493	0.165	2.87	86	2.1	-	73	-0.070	11.41	0.461
65	10.662	0.169	2.88	86	1.9	-	73	-0.068	11.53	0.420
66	10.831	0.169	2.88	86	2.0	-	73	-0.069	11.44	0.345
67	10.995	0.164	2.87	86	2.0	-	73	-0.068	11.28	0.358
68	11.163	0.168	2.88	86	1.9	-	73	-0.067	11.34	0.266
69	11.334	0.171	2.89	86	2.1	-	73	-0.069	11.30	0.309
70	11.496	0.162	2.89	87	1.5	100	73	-0.069	11.16	0.348
71	11.663	0.167	2.88	87	1.5	-	73	-0.071	11.20	0.317
72	11.833	0.170	2.88	87	2.0	-	73	-0.069	11.17	0.304
73	12.004	0.171	2.89	88	2.1	-	74	-0.071	11.23	0.258
74	12.169	0.165	2.89	88	1.6	-	74	-0.072	11.38	0.308
75	12.339	0.170	2.89	88	1.9	-	73	-0.069	11.57	0.293
76	12.505	0.166	2.89	88	1.6	-	73	-0.070	11.25	0.142
77	12.673	0.168	2.89	88	1.6	-	73	-0.069	11.15	0.104
78	12.843	0.170	2.89	89	1.6	-	73	-0.067	10.97	0.077
79	13.012	0.169	2.89	89	2.1	-	73	-0.069	10.63	0.050
80	13.178	0.166	2.88	89	1.9	100	73	-0.068	10.08	0.031
81	13.346	0.168	2.89	89	1.6	-	73	-0.067	10.07	0.038
82	13.515	0.169	2.89	89	1.7	-	73	-0.066	10.02	0.047
83	13.681	0.166	2.89	89	1.5	-	73	-0.068	9.84	0.052
84	13.848	0.167	2.89	89	2.1	-	73	-0.068	10.07	0.060
85	14.020	0.172	2.89	89	1.7	-	73	-0.066	9.83	0.039
86	14.190	0.170	2.90	89	1.9	-	73	-0.066	9.60	0.043
87	14.357	0.167	2.90	89	1.5	-	73	-0.067	9.67	0.054
88	14.526	0.169	2.89	89	1.9	-	73	-0.069	9.61	0.048
89	14.696	0.170	2.90	90	1.8	-	73	-0.068	9.59	0.057
90	14.859	0.163	2.90	90	2.1	100	73	-0.068	9.64	0.062
91	15.028	0.169	2.90	90	1.6	-	73	-0.066	9.61	0.064
92	15.202	0.174	2.90	90	1.9	-	73	-0.068	9.66	0.061
93	15.370	0.168	2.89	90	1.6	-	73	-0.066	9.68	0.060
94	15.537	0.167	2.90	90	1.8	-	73	-0.068	9.74	0.066
95	15.704	0.167	2.90	90	2.1	-	73	-0.065	9.70	0.064

BOX B TEST DATA - ASTM E2780 / ASTM E2515

Client: FPI
Model: I3000
Run #: 4

Job #: 23-229
Tracking #: 169
Technician: AK
Date: 11/30/2023

	Particulate Sampling Data							Flue Gas Data		
Elapsed Time (min)	Gas Meter (ft^3)	Sample Rate (cfm)	Orifice dH (in H_2O)	Meter Temp (°F)	Meter Vacuum (in Hg)	Pro. Rate (%)	Filter (°F)	Flue Draft (in H_2O)	CO_2 (%)	CO (%)
96	15.876	0.172	2.90	90	1.5	-	73	-0.068	9.42	0.062
97	16.043	0.167	2.90	91	1.8	-	73	-0.067	9.27	0.065
98	16.210	0.167	2.89	91	1.6	-	73	-0.067	9.22	0.070
99	16.380	0.170	2.90	91	1.9	-	73	-0.066	9.19	0.067
100	16.549	0.169	2.89	91	1.6	101	73	-0.066	9.09	0.066
101	16.718	0.169	2.90	91	2.1	-	73	-0.066	9.03	0.060
102	16.887	0.169	2.90	91	2.1	-	73	-0.066	9.07	0.060
103	17.056	0.169	2.89	91	1.8	-	73	-0.063	8.99	0.063
104	17.223	0.167	2.90	91	2.0	-	73	-0.067	9.00	0.062
105	17.393	0.170	2.90	91	1.7	-	73	-0.066	8.96	0.067
106	17.565	0.172	2.90	91	1.9	-	73	-0.066	9.02	0.062
107	17.730	0.165	2.90	91	2.0	-	73	-0.063	9.08	0.063
108	17.901	0.171	2.90	91	2.0	-	73	-0.066	9.05	0.069
109	18.074	0.173	2.90	91	1.5	-	73	-0.064	8.93	0.053
110	18.239	0.165	2.90	91	1.6	100	73	-0.065	8.96	0.063
111	18.410	0.171	2.90	91	2.0	-	73	-0.064	9.05	0.056
112	18.578	0.168	2.90	91	1.5	-	73	-0.064	8.91	0.054
113	18.747	0.169	2.91	92	1.5	-	73	-0.064	8.98	0.055
114	18.918	0.171	2.92	92	1.7	-	73	-0.065	9.27	0.074
115	19.086	0.168	2.90	92	1.5	-	73	-0.063	9.23	0.083
116	19.256	0.170	2.90	92	2.0	-	73	-0.065	9.21	0.076
117	19.426	0.170	2.90	92	1.6	-	73	-0.064	9.07	0.057
118	19.593	0.167	2.90	92	1.5	-	73	-0.064	9.02	0.069
119	19.764	0.171	2.91	92	1.6	-	73	-0.063	9.10	0.064
120	19.936	0.172	2.91	92	2.1	101	73	-0.064	9.22	0.061
121	20.101	0.165	2.90	92	2.1	-	73	-0.064	9.08	0.043
122	20.271	0.170	2.91	92	1.9	-	73	-0.064	9.04	0.035
123	20.441	0.170	2.90	92	1.9	-	73	-0.063	9.15	0.037
124	20.609	0.168	2.91	92	1.7	-	73	-0.063	9.18	0.039
125	20.782	0.173	2.91	92	2.1	-	73	-0.062	9.19	0.034
126	20.951	0.169	2.91	92	1.9	-	73	-0.064	9.20	0.033
127	21.123	0.172	2.91	92	2.0	-	73	-0.062	9.28	0.037

BOX B TEST DATA - ASTM E2780 / ASTM E2515

Client: FPI
Model: I3000
Run #: 4

Job #: 23-229
Tracking #: 169
Technician: AK
Date: 11/30/2023

	Particulate Sampling Data							Flue Gas Data		
Elapsed Time (min)	Gas Meter (ft^3)	Sample Rate (cfm)	Orifice dH (in H_2O)	Meter Temp (°F)	Meter Vacuum (in Hg)	Pro. Rate (%)	Filter (°F)	Flue Draft (in H_2O)	CO_2 (%)	CO (%)
128	21.287	0.164	2.91	92	1.7	-	73	-0.063	9.34	0.041
129	21.458	0.171	2.91	92	1.7	-	73	-0.062	9.25	0.040
130	21.628	0.170	2.91	92	1.5	100	73	-0.063	9.22	0.045
131	21.796	0.168	2.91	92	2.0	-	73	-0.063	9.22	0.043
132	21.967	0.171	2.92	92	1.9	-	73	-0.061	8.83	0.052
133	22.141	0.174	2.91	93	1.6	-	73	-0.061	8.91	0.047
134	22.310	0.169	2.90	93	2.1	-	73	-0.062	8.77	0.045
135	22.475	0.165	2.91	93	1.6	-	73	-0.062	8.47	0.048
136	22.648	0.173	2.91	93	1.6	-	73	-0.064	8.50	0.055
137	22.817	0.169	2.91	93	2.0	-	73	-0.060	8.38	0.052
138	22.987	0.170	2.91	93	1.7	-	73	-0.061	8.35	0.053
139	23.157	0.170	2.92	93	1.9	-	73	-0.060	8.32	0.052
140	23.329	0.172	2.92	93	1.6	100	73	-0.060	8.36	0.055
141	23.498	0.169	2.91	93	1.7	-	73	-0.059	8.38	0.047
142	23.666	0.168	2.91	93	2.1	-	73	-0.060	8.44	0.047
143	23.834	0.168	2.91	93	1.5	-	73	-0.060	8.42	0.048
144	24.008	0.174	2.92	93	1.9	-	73	-0.060	8.52	0.055
145	24.173	0.165	2.91	93	1.5	-	73	-0.061	8.55	0.038
146	24.346	0.173	2.92	93	1.8	-	73	-0.061	8.69	0.047
147	24.515	0.169	2.91	93	2.0	-	73	-0.062	8.69	0.043
148	24.687	0.172	2.91	93	2.1	-	73	-0.060	8.88	0.040
149	24.852	0.165	2.91	93	1.5	-	73	-0.059	8.89	0.038
150	25.023	0.171	2.91	93	1.6	99	73	-0.059	8.95	0.034
151	25.193	0.170	2.91	93	2.0	-	73	-0.061	8.94	0.040
152	25.364	0.171	2.91	93	2.0	-	73	-0.062	9.12	0.030
153	25.535	0.171	2.92	93	1.5	-	73	-0.060	9.19	0.031
154	25.704	0.169	2.91	93	1.7	-	73	-0.061	9.26	0.030
155	25.875	0.171	2.91	93	1.9	-	72	-0.061	9.28	0.033
156	26.040	0.165	2.90	93	1.5	-	72	-0.062	9.29	0.020
157	26.212	0.172	2.92	93	2.1	-	73	-0.060	9.30	0.026
158	26.386	0.174	2.92	93	1.5	-	72	-0.061	9.06	0.024
159	26.553	0.167	2.92	93	1.7	-	72	-0.060	8.65	0.027

BOX B TEST DATA - ASTM E2780 / ASTM E2515

Client: FPI
Model: I3000
Run #: 4

Job #: 23-229
Tracking #: 169
Technician: AK
Date: 11/30/2023

	Particulate Sampling Data							Flue Gas Data		
Elapsed Time (min)	Gas Meter (ft^3)	Sample Rate (cfm)	Orifice dH (in H_2O)	Meter Temp (°F)	Meter Vacuum (in Hg)	Pro. Rate (%)	Filter (°F)	Flue Draft (in H_2O)	CO_2 (%)	CO (%)
160	26.722	0.169	2.91	93	1.9	100	72	-0.059	8.65	0.025
161	26.896	0.174	2.91	93	1.9	-	72	-0.061	8.82	0.026
162	27.062	0.166	2.92	93	2.0	-	72	-0.058	8.56	0.024
163	27.233	0.171	2.91	93	2.0	-	72	-0.061	8.38	0.031
164	27.404	0.171	2.92	93	1.6	-	72	-0.060	8.17	0.032
165	27.572	0.168	2.92	93	1.5	-	72	-0.060	8.13	0.029
166	27.743	0.171	2.91	93	1.7	-	72	-0.060	7.97	0.030
167	27.912	0.169	2.92	93	1.8	-	72	-0.058	7.92	0.034
168	28.084	0.172	2.92	94	2.0	-	72	-0.059	7.89	0.032
169	28.256	0.172	2.91	94	1.9	-	72	-0.060	7.87	0.033
170	28.424	0.168	2.91	94	2.1	100	72	-0.056	7.99	0.029
171	28.593	0.169	2.91	94	2.0	-	72	-0.056	7.91	0.030
172	28.766	0.173	2.92	94	1.6	-	72	-0.056	7.92	0.031
173	28.934	0.168	2.91	94	1.5	-	72	-0.056	7.82	0.033
174	29.103	0.169	2.92	94	1.8	-	72	-0.058	7.78	0.038
175	29.277	0.174	2.92	94	2.0	-	72	-0.057	7.80	0.032
176	29.446	0.169	2.91	94	1.5	-	72	-0.057	7.72	0.034
177	29.611	0.165	2.92	94	2.0	-	72	-0.057	7.66	0.032
178	29.785	0.174	2.92	94	2.0	-	72	-0.055	7.64	0.036
179	29.956	0.171	2.92	94	1.9	-	72	-0.056	7.65	0.034
180	30.124	0.168	2.92	94	1.8	100	72	-0.054	7.63	0.033
181	30.295	0.171	2.92	94	1.5	-	72	-0.056	7.61	0.034
182	30.468	0.173	2.92	94	1.6	-	72	-0.055	7.63	0.032
183	30.636	0.168	2.91	94	1.7	-	72	-0.056	7.60	0.036
184	30.802	0.166	2.92	94	1.5	-	72	-0.054	7.66	0.038
185	30.973	0.171	2.91	94	2.1	-	72	-0.055	7.50	0.034
186	31.146	0.173	2.91	94	1.5	-	72	-0.057	7.63	0.038
187	31.312	0.166	2.92	94	1.9	-	72	-0.055	7.59	0.039
188	31.485	0.173	2.92	94	1.5	-	72	-0.056	7.58	0.035
189	31.658	0.173	2.92	94	2.1	-	72	-0.055	7.59	0.035
190	31.824	0.166	2.92	94	1.5	100	72	-0.055	7.57	0.033
191	31.992	0.168	2.91	94	1.9	-	72	-0.056	7.58	0.036

BOX B TEST DATA - ASTM E2780 / ASTM E2515

Client: FPI
Model: I3000
Run #: 4

Job #: 23-229
Tracking #: 169
Technician: AK
Date: 11/30/2023

	Particulate Sampling Data							Flue Gas Data		
Elapsed Time (min)	Gas Meter (ft^3)	Sample Rate (cfm)	Orifice dH (in H_2O)	Meter Temp (°F)	Meter Vacuum (in Hg)	Pro. Rate (%)	Filter (°F)	Flue Draft (in H_2O)	CO_2 (%)	CO (%)
192	32.163	0.171	2.91	94	1.7	-	72	-0.054	7.57	0.038
193	32.337	0.174	2.91	94	1.8	-	72	-0.054	7.48	0.036
194	32.502	0.165	2.92	94	1.7	-	72	-0.056	7.54	0.031
195	32.674	0.172	2.92	94	2.0	-	72	-0.055	7.23	0.033
196	32.846	0.172	2.92	94	2.0	-	72	-0.053	7.15	0.034
197	33.018	0.172	2.91	94	1.6	-	72	-0.056	7.08	0.028
198	33.183	0.165	2.91	94	1.5	-	72	-0.054	6.94	0.029
199	33.354	0.171	2.92	94	1.9	-	72	-0.053	7.04	0.029
200	33.525	0.171	2.92	94	2.0	100	72	-0.056	6.96	0.030
201	33.697	0.172	2.92	94	1.5	-	72	-0.054	7.01	0.034
202	33.865	0.168	2.92	94	1.9	-	72	-0.054	7.01	0.031
203	34.038	0.173	2.92	94	1.9	-	72	-0.054	7.01	0.031
204	34.210	0.172	2.92	94	1.7	-	72	-0.055	7.03	0.034
205	34.375	0.165	2.92	94	2.0	-	72	-0.051	7.01	0.038
206	34.547	0.172	2.92	94	1.7	-	72	-0.054	6.88	0.042
207	34.717	0.170	2.91	94	1.6	-	72	-0.054	7.04	0.036
208	34.888	0.171	2.91	94	1.6	-	72	-0.054	7.02	0.036
209	35.056	0.168	2.92	94	1.8	-	72	-0.053	6.98	0.031
210	35.228	0.172	2.93	94	1.8	101	72	-0.053	6.97	0.030
211	35.398	0.170	2.92	94	1.7	-	72	-0.053	6.92	0.034
212	35.569	0.171	2.92	94	1.5	-	72	-0.053	7.08	0.036
213	35.741	0.172	2.92	94	1.7	-	72	-0.053	7.04	0.037
214	35.908	0.167	2.92	94	1.5	-	72	-0.051	7.04	0.036
215	36.077	0.169	2.92	94	1.6	-	72	-0.053	6.98	0.030
216	36.250	0.173	2.92	94	1.9	-	71	-0.051	7.02	0.030
217	36.419	0.169	2.92	94	1.9	-	71	-0.053	7.01	0.031
218	36.593	0.174	2.92	94	1.5	-	71	-0.052	7.00	0.035
219	36.762	0.169	2.93	94	1.9	-	71	-0.051	6.98	0.031
220	36.930	0.168	2.93	94	1.9	101	71	-0.052	6.95	0.030
221	37.101	0.171	2.93	94	2.0	-	71	-0.052	7.04	0.031
222	37.269	0.168	2.92	94	1.8	-	71	-0.052	6.96	0.033
223	37.439	0.170	2.92	94	1.7	-	71	-0.051	6.99	0.034

BOX B TEST DATA - ASTM E2780 / ASTM E2515

Client: FPI
Model: I3000
Run #: 4

Job #: 23-229
Tracking #: 169
Technician: AK
Date: 11/30/2023

	Particulate Sampling Data							Flue Gas Data		
Elapsed Time (min)	Gas Meter (ft^3)	Sample Rate (cfm)	Orifice dH (in H_2O)	Meter Temp (°F)	Meter Vacuum (in Hg)	Pro. Rate (%)	Filter (°F)	Flue Draft (in H_2O)	CO_2 (%)	CO (%)
224	37.611	0.172	2.93	94	2.0	-	71	-0.051	7.01	0.038
225	37.782	0.171	2.93	94	2.1	-	71	-0.052	6.99	0.038
226	37.953	0.171	2.93	94	2.1	-	71	-0.054	6.98	0.033
227	38.125	0.172	2.93	94	1.6	-	71	-0.050	6.96	0.034
228	38.296	0.171	2.92	94	1.7	-	71	-0.051	7.06	0.036
229	38.462	0.166	2.93	94	1.9	-	71	-0.052	7.04	0.035
230	38.631	0.169	2.92	94	1.8	100	71	-0.051	6.90	0.037
231	38.803	0.172	2.92	94	1.8	-	71	-0.050	6.76	0.039
232	38.973	0.170	2.92	94	2.0	-	71	-0.051	6.91	0.036
233	39.142	0.169	2.93	94	2.0	-	71	-0.053	6.88	0.039
234	39.314	0.172	2.92	94	1.5	-	71	-0.052	6.73	0.037
235	39.488	0.174	2.92	94	1.7	-	71	-0.052	6.68	0.035
236	39.657	0.169	2.92	94	1.5	-	71	-0.050	6.64	0.039
237	39.826	0.169	2.92	94	2.1	-	71	-0.052	6.50	0.033
238	39.997	0.171	2.92	94	1.5	-	71	-0.050	6.51	0.036
239	40.168	0.171	2.92	94	1.5	-	71	-0.050	6.47	0.035
240	40.337	0.169	2.92	94	1.7	100	71	-0.050	6.43	0.036
241	40.507	0.170	2.92	94	1.6	-	71	-0.051	6.42	0.036
242	40.680	0.173	2.93	94	1.5	-	71	-0.052	6.44	0.035
243	40.849	0.169	2.92	94	2.1	-	71	-0.049	6.38	0.038
244	41.015	0.166	2.92	94	1.6	-	71	-0.049	6.40	0.039
245	41.186	0.171	2.92	94	1.5	-	71	-0.049	6.36	0.040
246	41.357	0.171	2.92	94	1.8	-	71	-0.051	6.46	0.039
247	41.525	0.168	2.93	94	1.9	-	71	-0.052	6.50	0.036
248	41.696	0.171	2.92	94	2.0	-	71	-0.051	6.39	0.041
249	41.869	0.173	2.93	94	1.5	-	71	-0.051	6.37	0.038
250	42.042	0.173	2.93	94	1.6	100	71	-0.053	6.39	0.043
251	42.210	0.168	2.92	94	2.0	-	71	-0.049	6.32	0.039
252	42.381	0.171	2.93	94	1.5	-	71	-0.051	6.18	0.047
253	42.553	0.172	2.93	94	1.7	-	71	-0.051	6.21	0.040
254	42.718	0.165	2.93	94	1.5	-	71	-0.048	6.05	0.039
255	42.891	0.173	2.92	94	2.0	-	71	-0.050	6.26	0.039

BOX B TEST DATA - ASTM E2780 / ASTM E2515

Client: FPI
Model: I3000
Run #: 4

Job #: 23-229
Tracking #: 169
Technician: AK
Date: 11/30/2023

	Particulate Sampling Data							Flue Gas Data		
Elapsed Time (min)	Gas Meter (ft^3)	Sample Rate (cfm)	Orifice dH (in H_2O)	Meter Temp (°F)	Meter Vacuum (in Hg)	Pro. Rate (%)	Filter (°F)	Flue Draft (in H_2O)	CO_2 (%)	CO (%)
256	43.061	0.170	2.93	94	2.1	-	71	-0.049	6.14	0.045
257	43.231	0.170	2.93	94	2.0	-	71	-0.050	6.11	0.041
258	43.399	0.168	2.92	94	1.8	-	71	-0.053	6.15	0.037
259	43.571	0.172	2.92	94	1.7	-	71	-0.052	6.10	0.035
260	43.742	0.171	2.93	94	1.5	99	71	-0.051	6.10	0.043
261	43.910	0.168	2.92	94	1.7	-	70	-0.048	6.21	0.036
262	44.080	0.170	2.93	94	1.6	-	70	-0.051	6.19	0.045
263	44.252	0.172	2.92	94	1.6	-	70	-0.048	6.12	0.042
264	44.423	0.171	2.93	94	1.5	-	70	-0.048	6.17	0.043
265	44.591	0.168	2.92	94	1.5	-	70	-0.049	6.11	0.042
266	44.762	0.171	2.92	94	1.7	-	70	-0.049	6.03	0.042
267	44.934	0.172	2.92	94	1.6	-	70	-0.051	5.96	0.047
268	45.105	0.171	2.92	94	1.7	-	70	-0.049	6.07	0.044
269	45.271	0.166	2.92	94	1.5	-	70	-0.050	5.96	0.043
270	45.444	0.173	2.93	94	2.1	99	70	-0.050	5.86	0.037
271	45.614	0.170	2.93	94	1.9	-	70	-0.049	5.82	0.043
272	45.783	0.169	2.93	94	1.8	-	70	-0.047	5.84	0.044
273	45.957	0.174	2.93	94	2.1	-	70	-0.050	5.85	0.042
274	46.128	0.171	2.92	94	2.1	-	70	-0.049	5.68	0.037
275	46.298	0.170	2.92	94	2.1	-	70	-0.048	5.77	0.041
276	46.463	0.165	2.92	94	1.9	-	70	-0.051	5.66	0.040
277	46.637	0.174	2.92	94	1.5	-	70	-0.048	5.69	0.044
278	46.809	0.172	2.93	94	1.8	-	70	-0.049	5.63	0.041
279	46.974	0.165	2.93	94	1.5	-	70	-0.049	5.62	0.042
280	47.146	0.172	2.93	94	1.5	100	70	-0.050	5.59	0.034
281	47.317	0.171	2.92	94	2.0	-	70	-0.048	5.53	0.043
282	47.487	0.170	2.93	94	1.5	-	70	-0.048	5.55	0.041
283	47.655	0.168	2.92	94	1.9	-	70	-0.047	5.58	0.040
284	47.830	0.175	2.93	94	2.0	-	70	-0.046	5.59	0.040
285	48.000	0.170	2.92	94	1.9	-	70	-0.047	5.49	0.040
286	48.166	0.166	2.92	94	1.8	-	70	-0.049	5.54	0.045
287	48.338	0.172	2.93	94	1.9	-	70	-0.048	5.53	0.041

BOX B TEST DATA - ASTM E2780 / ASTM E2515

Client: FPI
Model: I3000
Run #: 4

Job #: 23-229
Tracking #: 169
Technician: AK
Date: 11/30/2023

	Particulate Sampling Data							Flue Gas Data		
Elapsed Time (min)	Gas Meter (ft^3)	Sample Rate (cfm)	Orifice dH (in H_2O)	Meter Temp (°F)	Meter Vacuum (in Hg)	Pro. Rate (%)	Filter (°F)	Flue Draft (in H_2O)	CO_2 (%)	CO (%)
288	48.512	0.174	2.93	94	1.5	-	70	-0.048	5.33	0.041
289	48.679	0.167	2.93	94	1.6	-	70	-0.049	5.35	0.037
290	48.847	0.168	2.92	94	2.0	100	70	-0.049	5.30	0.039
291	49.018	0.171	2.92	94	2.0	-	70	-0.049	5.39	0.041
292	49.192	0.174	2.92	94	2.1	-	70	-0.048	5.31	0.040
293	49.360	0.168	2.92	94	1.6	-	69	-0.049	5.27	0.039
294	49.531	0.171	2.93	93	2.1	-	69	-0.049	5.22	0.038
295	49.701	0.170	2.93	94	1.9	-	69	-0.049	5.19	0.040
296	49.870	0.169	2.91	94	2.0	-	69	-0.047	5.28	0.046
297	50.042	0.172	2.91	94	1.5	-	69	-0.048	5.27	0.037
298	50.210	0.168	2.92	94	1.6	-	69	-0.049	5.21	0.038
299	50.385	0.175	2.92	94	1.6	-	69	-0.047	5.22	0.042
300	50.552	0.167	2.92	94	1.6	100	69	-0.047	5.17	0.044
301	50.723	0.171	2.92	93	1.5	-	69	-0.047	5.21	0.048
302	50.894	0.171	2.92	94	2.0	-	69	-0.045	5.19	0.044
303	51.063	0.169	2.93	93	1.9	-	69	-0.047	5.25	0.043
304	51.234	0.171	2.92	94	1.8	-	69	-0.047	5.21	0.041
305	51.402	0.168	2.92	93	2.1	-	69	-0.046	5.11	0.043
306	51.573	0.171	2.93	93	1.9	-	69	-0.046	5.26	0.041
307	51.744	0.171	2.92	93	2.0	-	69	-0.047	5.28	0.045
308	51.914	0.170	2.92	93	1.5	-	69	-0.047	5.29	0.042
309	52.084	0.170	2.93	93	1.6	-	69	-0.046	5.37	0.038
310	52.254	0.170	2.93	93	1.6	99	69	-0.049	5.33	0.047
311	52.422	0.168	2.92	93	1.5	-	69	-0.046	5.29	0.042
312	52.594	0.172	2.92	93	1.5	-	69	-0.046	5.24	0.045
313	52.765	0.171	2.93	93	2.0	-	69	-0.044	5.30	0.040
314	52.937	0.172	2.93	93	1.7	-	69	-0.048	5.35	0.044
315	53.106	0.169	2.92	93	1.7	-	69	-0.047	5.34	0.049
316	53.275	0.169	2.93	93	2.0	-	69	-0.046	5.37	0.051
317	53.446	0.171	2.93	93	1.6	-	69	-0.046	5.27	0.047
318	53.617	0.171	2.93	93	1.9	-	69	-0.047	5.35	0.045
319	53.786	0.169	2.92	93	1.6	-	69	-0.045	5.30	0.044

BOX B TEST DATA - ASTM E2780 / ASTM E2515

Client: FPI
Model: I3000
Run #: 4

Job #: 23-229
Tracking #: 169
Technician: AK
Date: 11/30/2023

	Particulate Sampling Data							Flue Gas Data		
Elapsed Time (min)	Gas Meter (ft^3)	Sample Rate (cfm)	Orifice dH (in H_2O)	Meter Temp (°F)	Meter Vacuum (in Hg)	Pro. Rate (%)	Filter (°F)	Flue Draft (in H_2O)	CO_2 (%)	CO (%)
320	53.960	0.174	2.92	93	1.8	100	69	-0.048	5.35	0.045
321	54.126	0.166	2.92	93	1.8	-	69	-0.046	5.38	0.047
322	54.294	0.168	2.92	93	1.7	-	69	-0.047	5.53	0.055
323	54.467	0.173	2.93	93	2.0	-	69	-0.045	5.56	0.051
324	54.637	0.170	2.93	93	1.9	-	69	-0.046	5.49	0.044
325	54.805	0.168	2.93	93	2.1	-	69	-0.047	5.46	0.048
326	54.979	0.174	2.92	93	2.1	-	69	-0.046	5.37	0.045
327	55.148	0.169	2.92	93	2.0	-	69	-0.044	5.44	0.043
328	55.317	0.169	2.92	93	2.0	-	69	-0.045	5.33	0.044
329	55.485	0.168	2.92	93	1.7	-	69	-0.047	5.36	0.048
330	55.657	0.172	2.93	93	1.9	100	69	-0.047	5.33	0.049
331	55.831	0.174	2.93	93	1.5	-	69	-0.048	5.31	0.048
332	55.999	0.168	2.92	93	1.5	-	69	-0.046	5.36	0.048
333	56.168	0.169	2.93	93	2.1	-	69	-0.045	5.42	0.046
334	56.342	0.174	2.93	93	1.7	-	69	-0.045	5.39	0.047
335	56.511	0.169	2.92	93	1.5	-	69	-0.047	5.36	0.043
336	56.680	0.169	2.92	93	1.5	-	69	-0.043	5.41	0.047
337	56.851	0.171	2.92	93	1.7	100	69	-0.046	5.31	0.045
Avg/Tot	56.856	0.169	2.89	89.7	1.8	100	71.7	-0.058	8.12	0.093

BOX C TEST DATA - ASTM E2780 / ASTM E2515

Client: FPI
Model: I3000
Run #: 4

Job #: 23-229
Tracking #: 169
Technician: AK
Date: 11/30/2023

	Particulate Sampling Data						
Elapsed Time (min)	Gas Meter (ft^3)	Sample Rate (cfm)	Orifice dH (in H_2O)	Meter Temp (°F)	Meter Vacuum (in Hg)	Pro. Rate (%)	Filter (°F)
0	-0.007		0.41	69	1.5		68
1	0.113	0.120	0.92	68	1.7	-	68
2	0.249	0.136	0.91	68	1.5	-	69
3	0.393	0.144	0.93	68	1.6	-	69
4	0.529	0.136	0.91	68	1.7	-	69
5	0.673	0.144	0.93	68	1.6	-	69
6	0.813	0.140	0.92	68	1.6	-	69
7	0.956	0.143	0.94	68	1.6	-	69
8	1.097	0.141	0.94	69	1.6	-	69
9	1.239	0.142	0.94	69	1.6	-	69
10	1.383	0.144	0.96	69	1.6	97	69
11	1.525	0.142	0.94	69	1.8	-	69
12	1.670	0.145	0.96	69	1.5	-	69
13	1.813	0.143	0.96	70	1.6	-	69
14	1.956	0.143	0.95	70	1.7	-	69
15	2.099	0.143	0.97	71	1.6	-	69
16	2.243	0.144	0.97	71	1.7	-	69
17	2.390	0.147	0.96	72	1.6	-	70
18	2.533	0.143	0.98	72	1.6	-	70
19	2.680	0.147	0.98	72	1.7	-	70
20	2.824	0.144	0.96	72	1.8	99	70
21	2.969	0.145	0.97	72	1.6	-	70
22	3.115	0.146	0.98	72	1.5	-	70
23	3.260	0.145	0.98	73	1.6	-	70
24	3.405	0.145	0.97	73	1.6	-	70
25	3.552	0.147	0.98	74	1.6	-	70
26	3.698	0.146	0.99	74	1.7	-	70
27	3.843	0.145	0.98	74	1.8	-	70
28	3.989	0.146	0.98	74	1.7	-	70
29	4.137	0.148	0.99	74	1.7	-	70
30	4.284	0.147	1.00	75	1.6	100	70
31	4.430	0.146	0.99	75	1.7	-	70

BOX C TEST DATA - ASTM E2780 / ASTM E2515

Client: FPI
Model: I3000
Run #: 4

Job #: 23-229
Tracking #: 169
Technician: AK
Date: 11/30/2023

	Particulate Sampling Data						
Elapsed Time (min)	Gas Meter (ft^3)	Sample Rate (cfm)	Orifice dH (in H_2O)	Meter Temp (°F)	Meter Vacuum (in Hg)	Pro. Rate (%)	Filter (°F)
32	4.577	0.147	0.98	75	1.7	-	70
33	4.725	0.148	1.00	75	1.6	-	70
34	4.873	0.148	1.00	75	1.6	-	70
35	5.021	0.148	1.01	75	1.7	-	69
36	5.168	0.147	1.00	76	1.8	-	70
37	5.316	0.148	0.99	76	1.7	-	69
38	5.464	0.148	1.00	76	1.8	-	69
39	5.612	0.148	1.01	77	1.7	-	69
40	5.760	0.148	1.02	77	1.8	102	69
41	5.909	0.149	1.01	77	1.7	-	69
42	6.061	0.152	1.01	77	1.6	-	69
43	6.210	0.149	1.01	77	1.8	-	69
44	6.360	0.150	1.00	77	1.6	-	69
45	6.509	0.149	1.01	76	1.6	-	69
46	6.659	0.150	1.02	77	1.7	-	69
47	6.810	0.151	1.02	78	1.7	-	69
48	6.961	0.151	1.03	78	1.8	-	69
49	7.111	0.150	1.03	78	1.6	-	69
50	7.262	0.151	1.03	78	1.8	103	70
51	7.412	0.150	1.03	77	1.8	-	69
52	7.563	0.151	1.03	78	1.8	-	69
53	7.714	0.151	1.02	78	1.8	-	70
54	7.865	0.151	1.02	78	1.6	-	70
55	8.016	0.151	1.02	78	1.6	-	70
56	8.167	0.151	1.02	78	1.8	-	70
57	8.318	0.151	1.02	78	1.7	-	70
58	8.470	0.152	1.02	78	1.7	-	70
59	8.621	0.151	1.02	78	1.8	-	69
60	8.770	0.149	1.03	78	1.8	103	69
Avg/Tot	8.777	0.146	0.98	73.8	1.7	101	69.3

WOODSTOVE SURFACE TEMPERATURE DATA

Client: FPI
Model: I3000
Run #: 4

Job #: 23-229
Tracking #: 169
Technician: AK
Date: 11/30/2023

Stove ΔT: 99

	Temperature Data (°F)						
Elapsed Time (min)	FB Left	FB Right	FB Back	FB Top	FB Bottom	Stove Surface Average	Catalyst Exit
0	360	372	235	400	331	339.6	595.7
1	358	371	236	391	338	338.6	584.1
2	357	370	237	390	344	339.5	577.0
3	355	369	237	392	351	340.7	699.4
4	354	367	236	398	358	342.6	828.8
5	352	365	236	411	364	345.6	903.5
6	350	363	237	425	369	348.7	872.3
7	348	361	236	435	375	351.0	844.7
8	345	359	238	443	379	352.7	808.3
9	344	357	236	446	384	353.2	785.2
10	342	355	238	451	387	354.6	776.7
11	340	353	237	452	391	354.6	782.0
12	338	351	236	452	394	354.1	797.1
13	337	349	239	455	397	355.1	817.3
14	335	347	236	459	399	355.2	836.3
15	333	345	236	465	402	356.2	850.1
16	331	343	234	470	404	356.5	859.7
17	330	341	236	477	405	357.7	868.2
18	328	339	234	478	407	357.3	873.4
19	327	338	234	483	408	357.9	876.2
20	326	336	234	486	410	358.4	876.2
21	324	335	234	493	411	359.2	875.6
22	323	334	234	497	412	359.9	878.3
23	322	332	233	504	412	360.6	883.6
24	322	331	232	512	413	362.1	888.2
25	321	330	231	518	414	362.8	889.1
26	320	329	231	523	414	363.4	888.5
27	319	328	233	533	415	365.5	891.6
28	319	328	229	540	415	366.1	890.1
29	318	327	229	550	415	368.0	887.0
30	318	327	230	558	416	369.6	884.8
31	317	326	227	575	413	371.3	886.4
32	316	325	227	576	407	370.2	891.4
33	315	325	227	580	399	369.1	894.4
34	314	324	225	581	391	367.2	893.9
35	314	324	223	582	383	365.1	891.7
36	313	323	222	581	375	363.0	890.7
37	312	323	221	585	368	361.9	893.4
38	312	323	219	586	361	360.3	897.4
39	311	323	219	588	355	359.2	901.1
40	311	323	217	591	349	358.1	903.2
41	310	323	217	594	343	357.6	906.1
42	310	323	216	598	338	357.0	909.7
43	309	323	214	600	333	356.0	910.6
44	309	323	213	604	329	355.5	910.7
45	309	323	213	607	325	355.2	909.8
46	308	324	212	609	321	354.6	908.7
47	308	324	210	608	317	353.5	909.8

WOODSTOVE SURFACE TEMPERATURE DATA

Client: FPI
Model: I3000
Run #: 4

Job #: 23-229
Tracking #: 169
Technician: AK
Date: 11/30/2023

Stove ΔT: 99

	Temperature Data (°F)						
Elapsed Time (min)	FB Left	FB Right	FB Back	FB Top	FB Bottom	Stove Surface Average	Catalyst Exit
48	308	324	210	613	314	353.8	912.2
49	308	325	208	613	310	352.8	916.1
50	308	325	209	614	307	352.6	919.0
51	308	326	207	617	305	352.4	921.9
52	308	326	207	620	302	352.7	924.2
53	308	327	205	621	299	352.0	924.7
54	308	327	205	624	297	352.2	926.2
55	308	328	205	625	295	352.1	925.6
56	309	328	203	626	293	351.7	924.3
57	309	329	204	627	291	351.7	920.9
58	309	329	203	627	289	351.5	918.5
59	310	330	202	627	287	351.0	914.1
60	310	330	202	626	285	350.6	912.2
61	310	331	201	625	284	350.4	909.3
62	310	332	202	624	282	349.9	907.4
63	311	332	200	621	281	349.0	906.1
64	311	333	201	620	279	348.8	906.1
65	312	333	200	617	278	348.1	904.7
66	312	334	199	617	276	347.7	902.1
67	312	334	200	614	275	347.2	899.3
68	313	335	200	614	274	347.1	897.7
69	313	335	199	610	273	346.0	895.6
70	314	336	199	610	271	346.1	894.5
71	315	336	199	607	270	345.3	891.8
72	315	336	201	605	269	345.2	889.6
73	316	337	198	603	268	344.5	887.2
74	317	338	199	604	267	344.7	892.7
75	317	338	198	601	266	344.1	899.7
76	318	338	198	601	265	344.0	901.7
77	318	339	198	601	264	344.1	897.9
78	319	339	198	602	263	344.2	891.9
79	319	340	198	603	262	344.3	886.8
80	320	340	198	600	262	343.8	881.7
81	321	341	198	598	261	343.5	884.7
82	321	342	198	594	260	343.0	884.0
83	321	342	199	593	259	343.0	882.5
84	322	343	198	590	259	342.1	884.1
85	322	344	197	587	258	341.5	881.1
86	322	344	198	584	258	341.2	880.8
87	322	345	198	581	257	340.6	878.6
88	322	345	198	580	256	340.2	877.8
89	323	346	198	575	256	339.5	877.1
90	322	347	199	573	255	339.3	877.5
91	322	347	198	570	255	338.4	878.2
92	323	348	199	567	254	338.0	878.9
93	323	348	199	565	254	337.6	878.9
94	323	349	199	561	253	336.9	879.2
95	323	349	199	558	253	336.3	877.5

WOODSTOVE SURFACE TEMPERATURE DATA

Client: FPI
Model: I3000
Run #: 4

Job #: 23-229
Tracking #: 169
Technician: AK
Date: 11/30/2023

Stove ΔT: 99

	Temperature Data (°F)						
Elapsed Time (min)	FB Left	FB Right	FB Back	FB Top	FB Bottom	Stove Surface Average	Catalyst Exit
96	323	349	198	557	252	335.9	873.8
97	323	350	199	555	252	335.7	867.9
98	322	351	199	553	251	335.3	860.3
99	322	351	199	548	251	334.3	853.4
100	322	351	198	545	250	333.4	847.0
101	322	352	198	543	250	332.9	841.8
102	322	352	199	539	249	332.5	836.4
103	322	353	198	537	249	331.7	833.9
104	322	353	199	534	248	331.1	832.5
105	322	353	198	531	248	330.2	829.4
106	321	353	199	527	247	329.7	828.1
107	321	354	198	526	247	329.2	824.4
108	321	354	199	523	247	328.5	822.7
109	321	354	198	521	246	328.0	819.4
110	320	354	198	517	246	327.1	815.8
111	320	354	198	516	245	326.8	813.0
112	320	354	197	514	245	326.1	809.6
113	320	355	198	511	244	325.7	805.6
114	320	355	198	510	244	325.4	806.5
115	320	356	198	508	244	325.2	809.9
116	320	356	198	507	243	324.8	813.2
117	320	356	199	506	243	324.6	813.3
118	320	355	199	504	242	323.9	811.4
119	320	356	197	503	242	323.5	808.2
120	319	356	198	500	242	323.0	807.9
121	320	355	197	502	241	323.1	806.2
122	320	355	199	500	241	323.0	799.9
123	320	355	199	497	241	322.3	792.4
124	320	355	198	497	240	321.9	786.6
125	320	355	198	495	240	321.7	783.2
126	320	355	197	494	240	321.1	781.2
127	320	355	199	493	240	321.2	779.8
128	320	354	198	491	239	320.6	780.3
129	321	354	198	490	239	320.4	782.7
130	321	354	199	488	238	319.9	783.9
131	321	354	199	489	238	320.4	785.2
132	322	354	199	488	237	320.1	785.1
133	322	355	200	487	237	320.0	783.2
134	322	355	198	487	237	319.8	782.0
135	323	355	199	486	236	319.7	779.5
136	323	354	199	485	236	319.3	777.8
137	323	354	199	483	235	318.9	775.5
138	323	354	199	482	235	318.6	772.5
139	324	354	199	481	235	318.5	770.3
140	323	354	199	479	234	318.0	769.2
141	324	354	199	479	234	318.0	767.7
142	324	354	199	477	234	317.4	766.3
143	324	354	199	475	234	317.1	763.0

WOODSTOVE SURFACE TEMPERATURE DATA

Client: FPI
Model: I3000
Run #: 4

Job #: 23-229
Tracking #: 169
Technician: AK
Date: 11/30/2023

Stove ΔT: 99

	Temperature Data (°F)						
Elapsed Time (min)	FB Left	FB Right	FB Back	FB Top	FB Bottom	Stove Surface Average	Catalyst Exit
144	324	353	199	474	234	316.9	762.8
145	324	353	198	472	233	316.1	760.6
146	324	353	198	471	233	316.0	757.0
147	324	353	198	470	233	315.5	756.4
148	324	353	199	469	233	315.3	756.8
149	324	352	198	466	232	314.6	757.2
150	324	352	198	466	232	314.5	758.5
151	325	352	198	465	232	314.2	761.0
152	325	352	199	465	232	314.4	762.4
153	325	352	198	464	231	314.1	763.7
154	325	352	199	465	231	314.2	765.5
155	326	351	198	464	231	314.0	766.0
156	326	351	199	464	231	314.1	767.4
157	326	351	199	465	230	314.3	767.7
158	326	351	199	464	230	314.0	763.3
159	327	351	199	463	230	314.1	757.5
160	327	351	200	463	229	314.2	755.5
161	327	351	201	463	229	314.1	754.1
162	328	351	200	461	229	313.6	753.0
163	328	351	201	462	229	314.0	749.6
164	328	351	201	461	228	313.7	745.8
165	328	351	201	458	228	313.2	741.7
166	329	351	200	458	227	313.0	737.7
167	329	351	202	457	227	313.1	735.5
168	329	351	202	454	227	312.5	732.7
169	329	350	202	453	227	312.3	730.0
170	329	350	202	452	226	312.1	727.5
171	329	350	203	451	226	311.7	725.8
172	329	349	202	450	226	311.2	723.8
173	329	349	203	448	225	310.7	722.3
174	329	349	202	447	225	310.5	721.1
175	329	348	203	444	225	309.9	718.6
176	329	348	202	443	225	309.3	717.6
177	329	348	202	442	225	309.0	714.0
178	329	347	202	440	225	308.6	712.3
179	328	347	202	439	225	308.1	710.6
180	329	346	202	437	225	307.7	706.7
181	329	346	202	434	225	307.0	705.3
182	328	346	202	434	224	306.8	705.0
183	328	345	202	433	224	306.5	701.7
184	328	345	202	431	224	306.0	699.4
185	328	344	201	430	224	305.5	698.4
186	328	344	202	429	224	305.3	697.7
187	328	344	201	427	224	304.7	695.7
188	328	343	201	426	223	304.2	694.8
189	328	343	201	425	223	303.9	692.3
190	328	342	201	423	223	303.4	691.2
191	328	342	201	421	223	302.9	689.7

WOODSTOVE SURFACE TEMPERATURE DATA

Client: FPI
Model: I3000
Run #: 4

Job #: 23-229
Tracking #: 169
Technician: AK
Date: 11/30/2023

Stove ΔT: 99

	Temperature Data (°F)						
Elapsed Time (min)	FB Left	FB Right	FB Back	FB Top	FB Bottom	Stove Surface Average	Catalyst Exit
192	328	341	201	421	223	302.6	687.3
193	328	341	201	420	223	302.2	686.9
194	328	340	200	417	222	301.5	683.7
195	328	340	200	417	222	301.3	678.8
196	328	340	200	416	222	301.0	672.9
197	328	339	200	414	222	300.6	669.3
198	328	339	199	413	222	300.2	666.6
199	327	339	200	410	222	299.7	664.5
200	327	339	200	409	222	299.4	661.8
201	327	339	200	408	222	299.2	661.6
202	327	339	199	405	223	298.4	661.7
203	326	339	199	405	223	298.3	661.3
204	326	339	199	403	223	298.0	660.6
205	325	339	198	402	223	297.6	660.2
206	325	339	199	402	223	297.5	658.3
207	324	339	199	401	224	297.2	659.9
208	324	339	199	400	224	297.1	658.2
209	323	339	198	399	224	296.7	656.8
210	323	339	198	397	225	296.2	653.4
211	322	339	197	397	225	295.9	651.8
212	321	339	197	396	225	295.7	651.2
213	321	339	197	394	225	295.2	650.7
214	320	339	197	394	226	295.1	648.0
215	319	339	197	393	226	294.7	646.7
216	319	339	196	392	226	294.3	645.3
217	318	339	196	391	226	294.1	643.8
218	317	339	196	390	227	293.7	643.2
219	317	338	196	389	227	293.3	641.4
220	316	338	195	389	227	292.9	641.7
221	316	338	195	387	227	292.5	639.6
222	315	338	195	387	227	292.5	638.9
223	315	338	194	387	227	292.2	639.3
224	314	338	194	385	227	291.5	636.2
225	313	338	194	385	227	291.3	636.2
226	312	338	193	384	227	291.1	635.9
227	312	338	193	384	227	290.8	635.4
228	311	338	193	383	228	290.6	634.5
229	311	338	193	383	228	290.5	635.0
230	310	338	192	383	228	290.2	634.1
231	310	338	192	383	228	290.2	634.4
232	309	338	192	382	228	289.8	634.6
233	309	338	191	382	228	289.4	635.6
234	309	338	191	382	228	289.2	631.7
235	308	337	191	381	228	288.7	632.5
236	307	337	191	380	228	288.5	629.4
237	307	337	190	379	228	288.0	626.6
238	307	337	190	378	228	287.7	626.5
239	306	336	190	379	228	287.8	624.4

WOODSTOVE SURFACE TEMPERATURE DATA

Client: FPI
Model: I3000
Run #: 4

Job #: 23-229
Tracking #: 169
Technician: AK
Date: 11/30/2023

Stove ΔT: 99

	Temperature Data (°F)						
Elapsed Time (min)	FB Left	FB Right	FB Back	FB Top	FB Bottom	Stove Surface Average	Catalyst Exit
240	305	336	190	378	228	287.2	622.1
241	305	336	189	376	227	286.5	619.2
242	304	336	189	375	227	286.2	619.3
243	304	335	189	376	227	286.0	616.8
244	303	334	189	374	227	285.6	616.6
245	303	334	189	373	227	285.1	617.7
246	302	334	188	373	227	284.5	616.4
247	302	333	188	372	226	284.4	617.3
248	301	333	188	370	226	283.6	616.6
249	301	333	187	370	226	283.2	615.9
250	301	332	187	370	225	282.9	616.1
251	299	332	187	369	225	282.4	613.4
252	299	331	187	369	225	282.1	613.9
253	299	330	187	367	225	281.5	612.1
254	298	330	186	367	224	281.1	613.3
255	298	329	186	366	224	280.5	610.1
256	297	328	185	366	223	279.7	608.3
257	296	328	184	365	223	279.1	609.2
258	296	327	185	363	223	278.7	608.0
259	295	327	185	362	222	278.1	605.4
260	294	326	184	362	222	277.6	604.7
261	294	325	184	362	222	277.3	602.4
262	293	324	184	361	221	276.7	602.7
263	293	324	183	359	221	275.9	602.0
264	292	323	183	359	221	275.7	602.0
265	292	323	183	359	220	275.3	601.7
266	291	322	183	358	220	274.9	601.1
267	290	322	183	358	220	274.4	599.6
268	290	321	182	356	220	273.8	597.9
269	289	320	183	357	219	273.7	598.4
270	289	319	182	356	219	272.9	598.7
271	288	319	181	355	218	272.2	599.8
272	287	318	182	355	218	272.0	597.4
273	287	317	182	355	218	271.7	595.0
274	286	317	181	353	217	270.7	593.4
275	286	317	181	353	217	270.6	589.9
276	285	316	181	352	216	269.8	588.7
277	284	315	181	351	216	269.2	586.9
278	284	314	180	350	215	268.6	586.0
279	283	314	180	349	215	268.0	586.7
280	283	313	180	349	214	267.7	585.9
281	282	312	180	348	213	267.1	584.4
282	282	311	179	348	213	266.5	581.6
283	281	310	179	346	212	265.6	581.6
284	280	310	179	345	212	265.0	581.7
285	280	309	178	345	211	264.6	578.0
286	280	308	178	345	211	264.3	578.2
287	279	307	178	343	210	263.4	576.4

WOODSTOVE SURFACE TEMPERATURE DATA

Client: FPI
Model: I3000
Run #: 4

Job #: 23-229
Tracking #: 169
Technician: AK
Date: 11/30/2023

Stove ΔT: 99

	Temperature Data (°F)						
Elapsed Time (min)	FB Left	FB Right	FB Back	FB Top	FB Bottom	Stove Surface Average	Catalyst Exit
288	279	306	179	343	210	263.2	574.9
289	278	306	178	342	209	262.6	573.6
290	278	305	178	340	208	261.6	571.7
291	277	304	177	340	208	261.3	571.7
292	277	303	177	339	207	260.5	569.3
293	276	302	177	338	207	260.1	566.1
294	276	301	176	337	206	259.2	566.9
295	276	301	177	336	206	258.9	565.0
296	275	300	176	336	205	258.4	563.0
297	275	299	176	335	204	257.6	561.5
298	274	299	176	333	204	257.1	560.4
299	273	298	175	332	203	256.3	559.4
300	273	297	175	331	203	255.6	558.4
301	272	296	175	330	202	254.8	555.8
302	271	295	175	330	201	254.4	556.2
303	271	295	175	328	201	253.8	554.0
304	270	294	175	328	200	253.3	555.4
305	269	293	175	327	200	252.6	552.2
306	268	292	175	326	199	252.1	553.2
307	267	291	175	325	199	251.5	551.7
308	267	291	174	324	198	250.8	552.7
309	266	290	175	323	198	250.2	549.7
310	265	289	174	322	197	249.5	549.4
311	265	288	174	321	197	248.9	549.0
312	264	288	174	321	196	248.7	547.2
313	264	287	174	320	196	248.0	548.5
314	263	286	173	319	195	247.3	547.2
315	262	285	174	319	195	246.9	546.5
316	261	285	174	318	194	246.5	546.3
317	261	284	173	318	194	245.8	546.3
318	260	284	174	316	193	245.5	545.9
319	260	283	173	317	193	245.2	543.9
320	259	283	174	316	193	244.9	545.0
321	259	282	174	316	193	244.7	542.9
322	259	282	173	315	192	244.2	542.4
323	258	281	175	315	192	244.2	543.1
324	258	281	174	315	192	243.9	541.7
325	257	280	174	314	192	243.3	542.3
326	257	279	174	314	191	243.1	540.6
327	256	279	175	315	191	243.1	540.4
328	256	278	174	313	191	242.5	539.8
329	256	278	175	313	190	242.2	538.2
330	255	277	174	313	190	241.8	537.2
331	255	277	174	312	190	241.5	535.7
332	254	276	176	311	189	241.1	535.0
333	254	276	174	313	189	241.1	534.2
334	253	276	175	312	189	240.9	534.4
335	253	275	175	311	188	240.5	532.8

WOODSTOVE SURFACE TEMPERATURE DATA

Client: FPI
Model: I3000
Run #: 4

Job #: 23-229
Tracking #: 169
Technician: AK
Date: 11/30/2023

Stove ΔT: 99

	Temperature Data (°F)						
Elapsed Time (min)	FB Left	FB Right	FB Back	FB Top	FB Bottom	Stove Surface Average	Catalyst Exit
336	253	275	175	312	188	240.5	533.6
337	252	275	177	310	188	240.2	533.4
Average	309.2	332.3	197.5	449.4	252.0	308.1	725.9

LAB SAMPLE DATA - ASTM E2515

Client: FPI
Model: I3000
Run #: 4

Job #: 23-229
Tracking #: 169
Technician: AK
Date: 11/30/2023

		Sample ID	Tare, mg	Final, mg	Catch, mg
Filters	**A**	G00765	252.0	252.7	0.7
	B	G00766	251.3	252.4	1.1
	C - 1st Hour	G00767	250.8	251.3	0.5
	Amb	G00768	251.1	251.3	0.2
Probes	**A**	4A	116023.4	116023.7	0.3
	B	4B	116182.6	116182.7	0.1
	C - 1st Hour	4C	116998.3	116998.3	0.0
O-rings	**A**	4A	3377.5	3377.7	0.2
	B	4B	3581.1	3581.3	0.2
	C - 1st Hour	4C	3373.3	3373.6	0.3

Placed in Dessicator on:	12/1/2023

Balance Audit (mg):		200.0		200.0		200.0			
		Weight (mg)	Date/Time	Weight (mg)	Date/Time	Weight (mg)	Date/Time	Weight (mg)	Date/Time
Filters	**A**	252.9	12/4 10:00	252.6	12/6 15:00	252.7	12/7 8:00		
	B	252.6	12/4 10:00	252.3	12/6 15:00	252.4	12/7 8:00		
	C - 1st Hour	251.7	12/4 10:00	251.2	12/6 15:00	251.3	12/7 8:00		
	Amb	251.5	12/4 10:00	251.3	12/6 15:00				
Probes	**A**	116023.9	12/4 10:00	116023.7	12/6 15:00				
	B	116182.8	12/4 10:00	116182.7	12/6 15:00				
	C - 1st Hour	116998.5	12/4 10:00	116998.3	12/6 15:00				
O-Rings	**A**	3377.6	12/4 10:00	3377.7	12/6 15:00				
	B	3581.4	12/4 10:00	3581.3	12/6 15:00				
	C - 1st Hour	3373.6	12/4 10:00	3373.6	12/6 15:00				

Train A Aggregate, mg:	**1.2**
Train B Aggregate, mg:	**1.4**
Train C Aggregate, mg:	**0.8**
Ambient, mg:	**0.2**

ASTM E2780 Wood Heater Run Sheets

Client: FPI Job Number: 23-229 Tracking #: 169
Model: I3000 Run Number: 4 Test Date: 11/30/23

Wood Heater Run Notes

Test Control Settings

Primary Air Setting(s): Open 0.232”
Targeted Burn Category: II

Preburn Notes

Time	Notes
	-None-

Test Notes

Test Burn Start Time: 12:52 Test Fuel Loaded by: 30 seconds
Door Closed: 35 seconds Air Control Set at: 300 seconds
Other Loading Notes: Bypass open while door open, fan set to low @ 30 min

Time	Notes
	-None-

Test Burn End Time: 18:29

Flue Gas Concentration Measurement

Calibration Gas Values: Span Gas CO_2 (%): 16.98 CO (%): 4.30
Mid Gas CO_2 (%): 10.00 CO (%): 2.51

Calibration Results:

	Pre Test			Post Test		
	Zero	Span	Mid	Zero	Span	Mid
Time	11/30 6:44	11/30 6:45	11/30 6:47	12/1 8:44	12/1 8:46	12/1 8:47
CO_2	0.02	16.98	10.07	-0.04	16.93	9.97
CO	0.008	4.331	2.535	-0.009	4.297	2.500

Flue Gas Probe Leak Check: Initial: No Leakage Final: No Leakage

Technician Signature: Date: 12/1/23

ASTM E2780 Wood Heater Run Sheets

Client: FPI Job Number: 23-229 Tracking #: 169
Model: I3000 Run Number: 4 Test Date: 11/30/23

Test Fuel Front/Side View

Test Fuel Iso View

Test Fuel Loaded in Stove

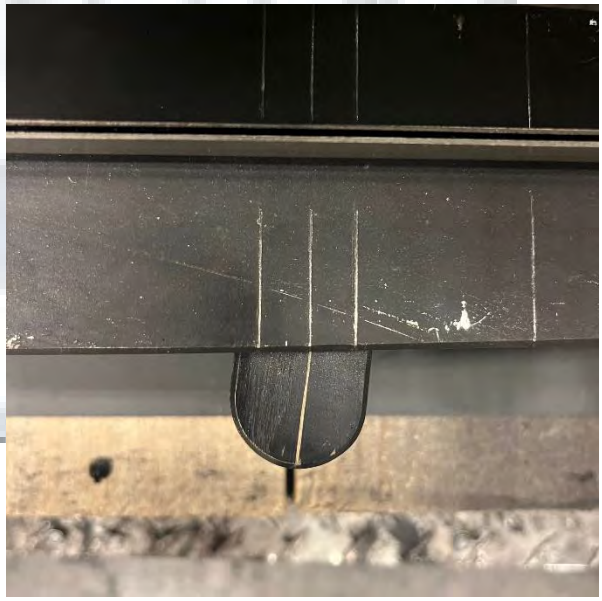

Air Setting

Technician Signature: Date: 12/1/23

WOOD STOVE TEST DATA PACKET
ASTM E2780/E2515

Run 5 Data Summary

Client:	IHP
Model:	I3000
Job #:	23-229
Tracking #:	169
Test Date:	12/18/2023

5/31/2024

Techidian Signature Date

TEST RESULTS - ASTM E2780 / ASTM E2515

Client: IHP
Model: I3000
Run #: 5

Job #: 23-229
Tracking #: 169
Technician: AK
Date: 12/18/2023

Burn Rate (kg/hr):	0.94

	Ambient Sample	Sample Train A	Sample Train B	1st Hour Filter
Total Sample Volume (ft^3)	48.575	86.083	81.669	8.827
Average Gas Velocity in Dilution Tunnel (ft/sec)	19.4			
Average Gas Flow Rate in Dilution Tunnel (dscf/hr)	12876.7			
Average Gas Meter Temperature (°F)	64.6	93.0	91.7	72.7
Total Sample Volume (dscf)	48.430	82.223	78.134	8.757
Average Tunnel Temperature (°F)	83.1			
Total Time of Test (min)	448			
Total Particulate Catch (mg)	0.1	4.7	4.4	2.6
Particulate Concentration, dry-standard (g/dscf)	0.0000021	0.0000572	0.0000563	0.0002969
Total PM Emissions (g)	0.20	5.30	5.22	3.80
Particulate Emission Rate (g/hr)	0.03	0.71	0.70	3.80
Emissions Factor (g/kg)	-	0.75	0.74	-
Difference from Average Total Particulate Emissions (g)	-	0.04	0.04	-
Difference from Average Total Particulate Emissions (%)	-	0.8%	0.8%	
Difference from Average Emissions Factor (g/kg)	-	0.01	0.01	-

Final Average Results	
Total Particulate Emissions (g)	5.26
Particulate Emission Rate (g/hr)	0.70
Emissions Factor (g/kg)	0.75
HHV Efficiency (%)	78.7%
LHV Efficiency (%)	85.0%
CO Emissions (g/min)	0.40

Quality Checks	Requirement	Observed	Result
Dual Train Precision	Each train within 7.5% of average emissions (in grams), or emission factors within 0.5 g/kg	See Above	OK
Filter Temps	<90 °F	76.1	OK
Face Velocity	< 30 ft/min	10.6	OK
Leakage Rate	Less than 4% of average sample rate	0 cfm	OK
Ambient Temp	55-90 °F	Min:59.7/Max:66.7	OK
Negative Probe Weight Evaluation	<5% of Total Catch	Probe Catch Not Negative	OK
Pro-Rate Variation	90% of readings between 90-110%; none greater than 120% or less than 80%	See Data Tabs	OK
Stove Surface ΔT	<126°F	120.4	OK

B415.1 Efficiency Results

Manufacturer:	IHP
Model:	I3000
Date:	12/18/23
Run:	5
Control #:	23-229
Test Duration:	448
Output Category:	2

Test Results in Accordance with CSA B415.1-09

	HHV Basis	LHV Basis
Overall Efficiency	78.7%	85.0%
Combustion Efficiency	98.5%	98.5%
Heat Transfer Efficiency	79.9%	86.4%

Output Rate (kJ/h)	14,542	13,794	**(Btu/h)**
Burn Rate (kg/h)	0.93	2.06	**(lb/h)**
Input (kJ/h)	18,483	17,533	**(Btu/h)**

Test Load Weight (dry kg)	6.97	15.35	**dry lb**
MC wet (%)	17.58		
MC dry (%)	21.33		
Particulate (g)	5.26		
CO (g)	180		
Test Duration (h)	7.47		

Emissions	Particulate	CO
g/MJ Output	0.05	1.66
g/kg Dry Fuel	0.75	25.89
g/h	0.70	24.16
g/min	0.01	0.40
lb/MM Btu Output	0.11	3.86

Air/Fuel Ratio (A/F)	15.21

VERSION: **2.4** **4/15/2010**

WOODSTOVE FUEL DATA - ASTM E2780

Client: IHP
Model: I3000
Run #: 5

Job #: 23-229
Tracking #: 169
Technician: AK
Date: 12/18/2023

Preburn Fuel Information

Size	Length (in)	Moisture Content (% DB)	Size	Length (in)	Moisture Content (% DB)
2x4	17.00	20.2	2x4	20.00	20.0
2x4	17.00	20.6	2x4	20.00	19.1
2x4	17.00	20.6			
2x4	17.00	23.3			
2x4	17.00	19.5			
2x4	17.00	20.0			
2x4	20.00	19.8			
2x4	20.00	20.9			

Total Fuel Weight (lbs): 16.76
Average Moisture (%DB): 20.4

Firebox Volume (ft^3): 2.75
Total 2x4 Crib Weight, with spacers (lbs): 9.61
Total 4x4 Crib Weight, with spacers (lbs): 9.06
Total Wet Fuel Weight, with spacers (lbs): 18.67

Coal Bed Range (20-25%):
Min (lbs): 3.73
Max (lbs): 4.67

Test Fuel Information

Size	Length (in)	Weight (lbs)	Moisture Content (%DB)			Dry Weight (lbs)
4x4	17.00	4.01	19.7	19.6	19.1	3.36
4x4	18.50	4.74	21.6	20.6	21.1	3.91
2x4	17.00	1.46	23.2	21.9	24.3	1.19
2x4	18.50	2.25	22.2	23.2	23.9	1.83
2x4	20.00	2.05	21.2	21.9	22.4	1.68
2x4	20.00	2.10	19.2	19.8	19.1	1.76
					Total Dry Weight, no spacers (lbs):	13.73
					Total Dry Weight, with spacers (lbs):	15.51

Spacer Moisture Readings (%DB)

15.5	16.4	14.7					
16.4	16.5	15.5					
17.8	15.5						
14.0	15.0						
16.2	17.6						
14.1	16.1						
17.7	14.2						
14.2	16.1						

Quality Checks	Requirement	Observed	Result
Fuel Density	25 - 36 (lbs/ft^3, DB)	28.5	OK
Loading Density	6.3 - 7.7 (lbs/ft^3, WB)	6.79	OK
2x4 Fuel Mix	35 - 65 % of total weight	51%	OK

DILUTION TUNNEL & MISC. DATA - ASTM E2780 / E2515

Client:	IHP	Job #:	23-229
Model:	I3000	Tracking #:	169
Run #:	5	Technician:	AK
Test Start Time:	13:53	Date:	12/18/2023

Total Sampling Time (min):	448	
Recording Interval (min):	1	
Meter Box γ Factor:	1.004	(A)
Meter Box γ Factor:	1.004	(B)
Meter Box γ Factor:	1.011	(C)
Meter Box γ Factor:	1.003	(Ambient)
Induced Draft Check (in. H_2O):	0	
Smoke Capture Check (%):	100%	
Date Flue Pipe Last Cleaned:	11/13/2023	
Test Fuel Scale Audit (lbs)	10.00	
Platform Scale Audit (lbs)	10.0	

	Pre-Test	Post Test	Avg.
Barometric Pressure (in. Hg)	29.65	29.47	29.56
Relative Humidity (%)	36.1	29.8	
Room Air Velocity (ft/min)	<50	<50	
Pitot Tube Leak Check	0	0	
Ambient Sample Volume:		48.575	ft^3

Sample Train Leak Checks

	Pre-test	Post-test			
(A)	0.000	0.000	cfm @	-6	in. Hg
(B)	0.000	0.000	cfm @	-5	in. Hg
(C)	0.000	0.000	cfm @	-5	in. Hg
(Ambient)	0.000	0.000	cfm @	-11	in. Hg

DILUTION TUNNEL FLOW

Traverse Data

Point	dP (in H_2O)	Temp (°F)
1	0.076	90
2	0.094	90
3	0.092	90
4	0.074	90
5	0.072	90
6	0.090	90
7	0.092	90
8	0.072	90
Center	0.089	90

Dilution Tunnel H_2O:	2.00	percent
Tunnel Diameter:	6	inches
Pitot Tube Cp:	0.99	[unitless]
Dilution Tunnel MW(dry):	29.00	lb/lb-mole
Dilution Tunnel MW(wet):	28.78	lb/lb-mole
Tunnel Area:	0.1963	ft^2
V_{strav}:	19.52	ft/sec
V_{scent}:	20.27	ft/sec
F_p:	0.963	[ratio]
Initial Tunnel Flow:	214.0	scf/min

Static Pressure: -0.160 in. H_2O

TEST FUEL PROPERTIES

Fuel Load Configuration

Firebox Front

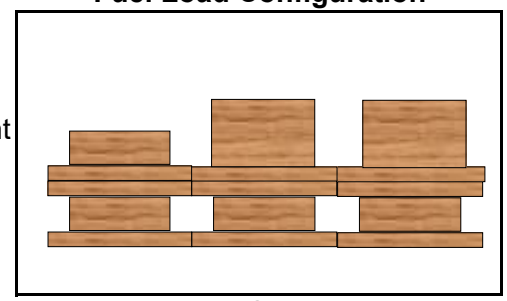

Firebox Back

Firebox Side View

Actual Fuel Used Properties

Fuel Type:	D. Fir
HHV (kJ/kg)	19,810
%C	48.73
%H	6.87
%O	43.9
%Ash	0.5
MC (%DB)	21.3

WOODSTOVE PREBURN DATA - ASTM E2780

Client: IHP
Model: I3000
Run #: 5

Job #: 23-229
Tracking #: 169
Technician: AK
Date: 12/18/2023

Recording Interval (min): 1
Run Time (min): 60

			Temperatures (°F)							
Elapsed Time (min)	Scale Reading (lbs)	Flue Draft (in H_2O)	FB Left	FB Right	FB Back	FB Top	FB Bottom	Stove Surface Average	Flue	Ambient
0	5.14	-0.070	418	460	303	687	444	462.4	459	69
1	5.12	-0.067	419	462	304	686	442	462.7	404	69
2	5.10	-0.066	421	463	305	677	437	460.8	382	69
3	5.06	-0.066	422	466	306	672	431	459.4	369	69
4	5.06	-0.062	424	467	307	660	425	456.6	359	68
5	5.02	-0.063	425	468	307	649	419	453.5	352	68
6	5.01	-0.062	426	470	306	635	413	450.0	346	68
7	4.97	-0.060	427	470	307	623	407	446.7	341	68
8	4.95	-0.061	427	471	307	614	401	443.9	337	68
9	4.93	-0.060	428	471	305	601	396	440.0	332	68
10	4.91	-0.060	428	470	305	591	390	436.8	329	68
11	4.88	-0.057	428	469	305	579	386	433.2	325	68
12	4.87	-0.057	427	469	304	573	381	430.7	322	68
13	4.85	-0.057	426	467	302	563	377	427.3	320	68
14	4.82	-0.056	425	466	301	553	374	423.8	318	68
15	4.80	-0.057	425	465	301	546	370	421.3	314	68
16	4.78	-0.055	424	463	300	536	367	417.9	312	68
17	4.76	-0.056	422	461	299	532	364	415.6	310	68
18	4.74	-0.054	421	459	298	522	362	412.2	306	68
19	4.72	-0.054	420	456	297	515	360	409.5	303	68
20	4.70	-0.054	418	454	295	509	357	406.7	301	68
21	4.67	-0.053	417	452	294	502	355	404.1	298	68
22	4.65	-0.052	415	450	292	496	353	401.3	296	67
23	4.62	-0.052	415	447	292	491	352	399.3	294	67
24	4.60	-0.052	413	445	291	484	350	396.3	292	66
25	4.59	-0.053	412	443	289	481	348	394.5	290	66
26	4.55	-0.051	410	441	288	473	346	391.7	290	66
27	4.54	-0.052	408	438	288	465	345	388.6	287	66
28	4.51	-0.052	407	437	286	465	343	387.7	286	65
29	4.48	-0.051	406	434	285	460	342	385.4	284	65
30	4.45	-0.051	404	432	284	455	341	383.1	282	65
31	4.44	-0.050	403	430	283	449	340	380.8	281	65
32	4.40	-0.049	401	428	281	446	338	378.9	280	65
33	4.38	-0.050	400	426	281	441	337	376.8	277	65
34	4.36	-0.049	398	423	280	436	336	374.7	275	64
35	4.34	-0.048	397	422	279	431	335	372.7	273	64
36	4.31	-0.050	396	420	277	429	334	371.1	272	64
37	4.29	-0.048	394	418	276	427	333	369.6	271	64
38	4.27	-0.048	393	416	275	422	332	367.5	269	63
39	4.25	-0.048	392	414	275	419	331	365.9	268	64
40	4.22	-0.046	391	412	273	417	330	364.2	267	63
41	4.20	-0.048	388	410	272	417	329	363.0	266	63
42	4.17	-0.049	387	408	271	409	328	360.4	264	63
43	4.16	-0.048	385	406	270	410	327	359.4	262	62
44	4.14	-0.047	384	404	269	403	326	357.1	262	63

WOODSTOVE PREBURN DATA - ASTM E2780

Client: IHP
Model: I3000
Run #: 5

Job #: 23-229
Tracking #: 169
Technician: AK
Date: 12/18/2023

Recording Interval (min): 1
Run Time (min): 60

			Temperatures (°F)							
Elapsed Time (min)	Scale Reading (lbs)	Flue Draft (in H_2O)	FB Left	FB Right	FB Back	FB Top	FB Bottom	Stove Surface Average	Flue	Ambient
45	4.10	-0.048	383	402	267	404	325	356.4	261	62
46	4.09	-0.048	381	400	267	398	324	354.1	261	62
47	4.06	-0.047	381	398	265	397	323	352.8	258	62
48	4.04	-0.046	378	396	265	398	322	352.0	258	62
49	4.02	-0.046	378	395	264	396	322	350.7	256	62
50	4.00	-0.047	376	393	263	389	321	348.5	257	62
51	3.98	-0.047	375	391	262	392	320	348.1	256	61
52	3.97	-0.045	373	390	261	391	319	346.7	254	62
53	3.94	-0.046	372	388	260	387	318	345.1	252	62
54	3.92	-0.045	370	386	259	384	317	343.1	251	61
55	3.90	-0.045	369	385	258	383	317	342.4	250	62
56	3.89	-0.044	368	383	258	379	316	340.7	248	61
57	3.86	-0.045	367	382	257	380	315	340.1	247	61
58	3.85	-0.044	366	380	256	374	314	338.1	247	61
59	3.83	-0.044	365	379	255	375	314	337.3	246	61
60	3.80	-0.044	363	377	255	374	313	336.4	245	61

BOX A TEST DATA - ASTM E2780 / ASTM E2515

Client: IHP
Model: I3000
Run #: 5

Job #: 23-229
Tracking #: 169
Technician: AK
Date: 12/18/2023

	Particulate Sampling Data							Fuel Weight (lb)		Temperature Data (°F)			
Elapsed Time (min)	Gas Meter (ft^3)	Sample Rate (cfm)	Dilution Tunnel dP (in H_2O)	Orifice dH (in H_2O)	Meter Temp (°F)	Meter Vacuum (in Hg)	Pro. Rate (%)	Scale Reading	Weight Change	Dilution Tunnel	Flue	Filter	Ambient
0	0.000		0.090	1.87	72	1.0		18.63		97	355	67	62
1	0.129	0.129	0.090	3.03	71	1.0	-	18.61	-0.02	110	367	70	62
2	0.299	0.170	0.089	3.06	71	1.1	-	18.50	-0.11	94	320	69	61
3	0.471	0.172	0.089	3.08	71	1.1	-	18.37	-0.13	93	327	70	62
4	0.647	0.176	0.090	3.11	71	1.1	-	18.21	-0.16	94	353	70	62
5	0.820	0.173	0.088	3.13	71	1.1	-	18.02	-0.19	97	388	70	61
6	0.992	0.172	0.090	3.15	71	1.1	-	17.92	-0.10	89	345	70	61
7	1.168	0.176	0.090	3.17	71	1.1	-	17.85	-0.07	86	323	70	61
8	1.345	0.177	0.090	3.19	71	1.1	-	17.77	-0.08	85	311	70	61
9	1.521	0.176	0.089	3.20	71	1.1	-	17.71	-0.06	85	305	70	61
10	1.694	0.173	0.090	3.20	71	1.1	92	17.62	-0.09	84	299	70	61
11	1.871	0.177	0.089	3.22	72	1.1	-	17.54	-0.08	85	294	70	61
12	2.050	0.179	0.089	3.24	72	1.1	-	17.48	-0.06	84	291	70	61
13	2.228	0.178	0.089	3.25	72	1.1	-	17.42	-0.06	84	290	70	61
14	2.402	0.174	0.090	3.25	72	1.1	-	17.33	-0.09	83	290	70	61
15	2.580	0.178	0.090	3.27	72	1.1	-	17.25	-0.08	83	291	70	61
16	2.760	0.180	0.089	3.28	72	1.1	-	17.17	-0.08	82	292	69	61
17	2.941	0.181	0.091	3.29	73	1.1	-	17.06	-0.11	82	292	69	60
18	3.121	0.180	0.091	3.30	73	1.1	-	16.98	-0.08	82	293	69	60
19	3.298	0.177	0.090	3.31	73	1.1	-	16.89	-0.09	82	292	69	60
20	3.477	0.179	0.090	3.32	73	1.1	96	16.80	-0.09	82	293	69	60
21	3.658	0.181	0.089	3.32	74	1.1	-	16.71	-0.09	82	293	69	61
22	3.841	0.183	0.091	3.34	74	1.1	-	16.61	-0.10	83	293	69	60
23	4.022	0.181	0.092	3.36	74	1.1	-	16.53	-0.08	83	294	69	60
24	4.200	0.178	0.090	3.35	74	1.1	-	16.43	-0.10	83	293	69	60
25	4.380	0.180	0.089	3.36	75	1.1	-	16.35	-0.08	83	294	69	60
26	4.565	0.185	0.090	3.37	75	1.2	-	16.25	-0.10	83	295	69	60
27	4.749	0.184	0.090	3.39	75	1.1	-	16.17	-0.08	83	295	69	60
28	4.930	0.181	0.088	3.39	75	1.1	-	16.10	-0.07	83	296	69	61
29	5.112	0.182	0.088	3.40	76	1.1	-	16.02	-0.08	84	297	69	61
30	5.293	0.181	0.089	3.41	76	1.1	97	15.93	-0.09	85	297	69	62
31	5.475	0.182	0.088	3.41	76	1.1	-	15.85	-0.08	85	295	70	62

BOX A TEST DATA - ASTM E2780 / ASTM E2515

Client: IHP
Model: I3000
Run #: 5

Job #: 23-229
Tracking #: 169
Technician: AK
Date: 12/18/2023

	Particulate Sampling Data							Fuel Weight (lb)		Temperature Data (°F)			
Elapsed Time (min)	Gas Meter (ft^3)	Sample Rate (cfm)	Dilution Tunnel dP (in H_2O)	Orifice dH (in H_2O)	Meter Temp (°F)	Meter Vacuum (in Hg)	Pro. Rate (%)	Scale Reading	Weight Change	Dilution Tunnel	Flue	Filter	Ambient
32	5.660	0.185	0.089	3.42	76	1.1	-	15.77	-0.08	86	295	70	62
33	5.846	0.186	0.087	3.43	77	1.1	-	15.68	-0.09	86	297	70	63
34	6.028	0.182	0.087	3.44	77	1.1	-	15.60	-0.08	87	299	70	63
35	6.212	0.184	0.087	3.43	77	1.1	-	15.52	-0.08	87	299	70	63
36	6.395	0.183	0.088	3.43	78	1.1	-	15.42	-0.10	87	302	70	63
37	6.577	0.182	0.088	3.43	78	1.1	-	15.33	-0.09	88	305	71	63
38	6.764	0.187	0.088	3.46	78	1.1	-	15.23	-0.10	88	308	71	63
39	6.949	0.185	0.088	3.46	78	1.1	-	15.11	-0.12	89	312	71	63
40	7.134	0.185	0.087	3.45	79	1.1	99	14.99	-0.12	89	315	71	63
41	7.320	0.186	0.087	3.47	79	1.1	-	14.86	-0.13	90	320	71	63
42	7.502	0.182	0.089	3.47	79	1.1	-	14.72	-0.14	90	325	72	63
43	7.688	0.186	0.087	3.48	80	1.1	-	14.59	-0.13	91	327	72	63
44	7.872	0.184	0.090	3.47	80	1.1	-	14.46	-0.13	90	329	72	62
45	8.060	0.188	0.088	3.48	80	1.2	-	14.34	-0.12	89	326	72	63
46	8.247	0.187	0.089	3.49	81	1.1	-	14.23	-0.11	88	327	72	62
47	8.433	0.186	0.087	3.48	81	1.1	-	14.12	-0.11	89	325	72	62
48	8.620	0.187	0.089	3.51	81	1.1	-	14.00	-0.12	89	325	72	62
49	8.803	0.183	0.088	3.49	81	1.1	-	13.90	-0.10	90	328	72	62
50	8.990	0.187	0.087	3.50	82	1.1	100	13.79	-0.11	90	327	72	62
51	9.175	0.185	0.087	3.51	82	1.1	-	13.68	-0.11	90	325	72	62
52	9.364	0.189	0.089	3.51	82	1.1	-	13.57	-0.11	90	326	72	62
53	9.551	0.187	0.088	3.51	83	1.2	-	13.45	-0.12	89	327	72	62
54	9.740	0.189	0.088	3.51	83	1.1	-	13.34	-0.11	89	328	72	62
55	9.926	0.186	0.087	3.51	83	1.1	-	13.21	-0.13	88	328	72	62
56	10.113	0.187	0.088	3.52	83	1.1	-	13.10	-0.11	89	328	72	62
57	10.298	0.185	0.087	3.51	83	1.2	-	12.98	-0.12	90	331	72	62
58	10.486	0.188	0.089	3.53	84	1.1	-	12.86	-0.12	90	333	72	62
59	10.672	0.186	0.088	3.52	84	1.1	-	12.71	-0.15	91	334	72	62
60	10.862	0.190	0.087	3.54	84	1.2	101	12.59	-0.12	91	335	72	62
61	11.050	0.188	0.088	3.55	84	1.1	-	12.46	-0.13	91	336	72	62
62	11.239	0.189	0.087	3.54	85	1.2	-	12.33	-0.13	90	336	72	63
63	11.427	0.188	0.087	3.54	85	1.1	-	12.21	-0.12	90	335	72	63

BOX A TEST DATA - ASTM E2780 / ASTM E2515

Client: IHP
Model: I3000
Run #: 5

Job #: 23-229
Tracking #: 169
Technician: AK
Date: 12/18/2023

	Particulate Sampling Data							Fuel Weight (lb)		Temperature Data (°F)			
Elapsed Time (min)	Gas Meter (ft^3)	Sample Rate (cfm)	Dilution Tunnel dP (in H_2O)	Orifice dH (in H_2O)	Meter Temp (°F)	Meter Vacuum (in Hg)	Pro. Rate (%)	Scale Reading	Weight Change	Dilution Tunnel	Flue	Filter	Ambient
64	11.615	0.188	0.086	3.53	85	1.2	-	12.09	-0.12	89	334	72	63
65	11.801	0.186	0.087	3.54	85	1.1	-	11.95	-0.14	90	333	72	63
66	11.991	0.190	0.088	3.55	85	1.2	-	11.83	-0.12	90	332	73	63
67	12.177	0.186	0.085	3.55	86	1.2	-	11.71	-0.12	91	332	73	63
68	12.367	0.190	0.086	3.56	86	1.1	-	11.59	-0.12	91	332	73	64
69	12.557	0.190	0.086	3.55	86	1.2	-	11.48	-0.11	91	332	73	64
70	12.746	0.189	0.088	3.54	86	1.1	101	11.37	-0.11	91	331	73	64
71	12.936	0.190	0.088	3.57	86	1.1	-	11.25	-0.12	90	329	73	64
72	13.125	0.189	0.086	3.57	87	1.2	-	11.14	-0.11	90	328	73	64
73	13.314	0.189	0.087	3.56	87	1.1	-	11.03	-0.11	89	326	73	64
74	13.501	0.187	0.090	3.55	87	1.1	-	10.90	-0.13	89	323	73	63
75	13.690	0.189	0.087	3.55	87	1.2	-	10.80	-0.10	90	322	73	62
76	13.878	0.188	0.087	3.56	88	1.1	-	10.71	-0.09	90	321	73	62
77	14.067	0.189	0.087	3.56	88	1.2	-	10.62	-0.09	90	320	73	63
78	14.259	0.192	0.087	3.57	88	1.1	-	10.52	-0.10	90	319	73	63
79	14.448	0.189	0.085	3.58	88	1.2	-	10.44	-0.08	90	317	73	64
80	14.639	0.191	0.087	3.58	88	1.2	101	10.36	-0.08	89	315	73	64
81	14.828	0.189	0.087	3.58	88	1.2	-	10.27	-0.09	89	315	73	64
82	15.018	0.190	0.088	3.57	88	1.1	-	10.19	-0.08	88	315	73	64
83	15.208	0.190	0.089	3.58	89	1.2	-	10.10	-0.09	89	315	73	64
84	15.396	0.188	0.088	3.60	89	1.2	-	10.02	-0.08	89	313	73	65
85	15.585	0.189	0.088	3.58	89	1.1	-	9.94	-0.08	90	313	73	65
86	15.774	0.189	0.087	3.58	89	1.2	-	9.85	-0.09	90	311	73	65
87	15.965	0.191	0.087	3.59	89	1.2	-	9.77	-0.08	90	311	74	64
88	16.156	0.191	0.087	3.60	89	1.1	-	9.69	-0.08	89	311	73	64
89	16.346	0.190	0.088	3.59	89	1.2	-	9.61	-0.08	88	309	73	63
90	16.539	0.193	0.090	3.60	90	1.1	100	9.52	-0.09	88	310	74	63
91	16.729	0.190	0.087	3.60	90	1.2	-	9.44	-0.08	89	313	73	63
92	16.918	0.189	0.090	3.60	90	1.2	-	9.38	-0.06	89	314	73	62
93	17.110	0.192	0.089	3.60	90	1.2	-	9.30	-0.08	90	315	73	62
94	17.298	0.188	0.089	3.59	90	1.1	-	9.22	-0.08	90	318	73	62
95	17.488	0.190	0.088	3.60	90	1.2	-	9.17	-0.05	90	316	73	62

BOX A TEST DATA - ASTM E2780 / ASTM E2515

Client: IHP
Model: I3000
Run #: 5

Job #: 23-229
Tracking #: 169
Technician: AK
Date: 12/18/2023

	Particulate Sampling Data							Fuel Weight (lb)		Temperature Data (°F)			
Elapsed Time (min)	Gas Meter (ft^3)	Sample Rate (cfm)	Dilution Tunnel dP (in H_2O)	Orifice dH (in H_2O)	Meter Temp (°F)	Meter Vacuum (in Hg)	Pro. Rate (%)	Scale Reading	Weight Change	Dilution Tunnel	Flue	Filter	Ambient
96	17.679	0.191	0.087	3.60	91	1.1	-	9.13	-0.04	90	314	73	62
97	17.869	0.190	0.087	3.60	91	1.1	-	9.05	-0.08	90	311	73	63
98	18.061	0.192	0.088	3.61	91	1.1	-	9.00	-0.05	90	309	73	63
99	18.252	0.191	0.086	3.61	91	1.1	-	8.95	-0.05	89	306	73	64
100	18.443	0.191	0.089	3.61	91	1.2	99	8.89	-0.06	88	305	73	64
101	18.636	0.193	0.088	3.60	91	1.1	-	8.84	-0.05	88	305	73	64
102	18.826	0.190	0.088	3.61	91	1.2	-	8.78	-0.06	89	303	73	64
103	19.017	0.191	0.087	3.60	91	1.2	-	8.72	-0.06	89	302	73	64
104	19.209	0.192	0.086	3.60	91	1.2	-	8.66	-0.06	89	302	73	64
105	19.397	0.188	0.087	3.60	91	1.1	-	8.61	-0.05	89	302	73	64
106	19.588	0.191	0.085	3.61	91	1.2	-	8.55	-0.06	89	302	73	65
107	19.780	0.192	0.086	3.61	91	1.1	-	8.48	-0.07	88	302	73	65
108	19.970	0.190	0.088	3.61	91	1.2	-	8.42	-0.06	88	303	73	65
109	20.162	0.192	0.088	3.61	92	1.1	-	8.35	-0.07	88	305	73	65
110	20.355	0.193	0.086	3.61	92	1.2	101	8.29	-0.06	88	303	73	65
111	20.545	0.190	0.086	3.61	92	1.2	-	8.23	-0.06	89	304	74	65
112	20.738	0.193	0.087	3.61	92	1.1	-	8.17	-0.06	89	303	74	65
113	20.931	0.193	0.087	3.61	92	1.2	-	8.10	-0.07	89	303	74	65
114	21.122	0.191	0.087	3.61	92	1.2	-	8.04	-0.06	88	303	74	65
115	21.314	0.192	0.088	3.61	92	1.1	-	7.99	-0.05	88	303	74	65
116	21.505	0.191	0.089	3.62	92	1.2	-	7.93	-0.06	88	302	74	65
117	21.695	0.190	0.090	3.62	92	1.2	-	7.86	-0.07	87	303	74	66
118	21.886	0.191	0.088	3.62	92	1.2	-	7.80	-0.06	87	303	74	66
119	22.079	0.193	0.091	3.61	93	1.2	-	7.75	-0.05	87	303	74	66
120	22.269	0.190	0.088	3.62	93	1.1	101	7.68	-0.07	88	303	74	66
121	22.461	0.192	0.087	3.63	93	1.2	-	7.62	-0.06	88	303	74	66
122	22.655	0.194	0.086	3.61	93	1.2	-	7.55	-0.07	88	303	74	66
123	22.847	0.192	0.088	3.62	93	1.2	-	7.49	-0.06	88	304	74	66
124	23.040	0.193	0.087	3.63	93	1.2	-	7.43	-0.06	87	305	74	66
125	23.234	0.194	0.089	3.63	93	1.2	-	7.37	-0.06	87	305	74	66
126	23.426	0.192	0.087	3.63	93	1.1	-	7.31	-0.06	87	304	74	66
127	23.618	0.192	0.087	3.63	93	1.1	-	7.25	-0.06	87	305	74	66

BOX A TEST DATA - ASTM E2780 / ASTM E2515

Client: IHP
Model: I3000
Run #: 5

Job #: 23-229
Tracking #: 169
Technician: AK
Date: 12/18/2023

	Particulate Sampling Data							Fuel Weight (lb)		Temperature Data (°F)			
Elapsed Time (min)	Gas Meter (ft^3)	Sample Rate (cfm)	Dilution Tunnel dP (in H_2O)	Orifice dH (in H_2O)	Meter Temp (°F)	Meter Vacuum (in Hg)	Pro. Rate (%)	Scale Reading	Weight Change	Dilution Tunnel	Flue	Filter	Ambient
128	23.811	0.193	0.088	3.63	93	1.1	-	7.19	-0.06	87	305	74	66
129	24.003	0.192	0.087	3.63	94	1.1	-	7.14	-0.05	87	305	74	66
130	24.193	0.190	0.087	3.62	94	1.2	101	7.07	-0.07	88	304	74	66
131	24.385	0.192	0.087	3.62	94	1.2	-	7.00	-0.07	88	305	74	66
132	24.579	0.194	0.088	3.63	94	1.1	-	6.95	-0.05	88	304	74	66
133	24.770	0.191	0.089	3.63	94	1.1	-	6.90	-0.05	87	304	74	66
134	24.963	0.193	0.088	3.64	94	1.1	-	6.83	-0.07	87	305	74	66
135	25.157	0.194	0.089	3.63	94	1.1	-	6.77	-0.06	87	305	74	66
136	25.350	0.193	0.088	3.63	94	1.2	-	6.71	-0.06	87	305	74	66
137	25.542	0.192	0.090	3.62	94	1.1	-	6.64	-0.07	87	304	74	66
138	25.736	0.194	0.087	3.63	94	1.2	-	6.59	-0.05	87	306	74	66
139	25.930	0.194	0.088	3.63	94	1.2	-	6.53	-0.06	88	307	74	66
140	26.123	0.193	0.087	3.63	94	1.2	102	6.45	-0.08	88	308	74	66
141	26.315	0.192	0.087	3.64	95	1.2	-	6.38	-0.07	88	307	75	67
142	26.509	0.194	0.088	3.63	95	1.2	-	6.34	-0.04	88	308	74	66
143	26.701	0.192	0.088	3.65	95	1.1	-	6.27	-0.07	87	310	75	66
144	26.892	0.191	0.088	3.63	95	1.2	-	6.19	-0.08	87	310	75	66
145	27.084	0.192	0.089	3.63	95	1.1	-	6.12	-0.07	87	311	75	67
146	27.278	0.194	0.088	3.64	95	1.1	-	6.05	-0.07	87	312	75	67
147	27.470	0.192	0.087	3.64	95	1.2	-	5.98	-0.07	87	313	75	66
148	27.663	0.193	0.088	3.64	95	1.2	-	5.92	-0.06	88	315	75	66
149	27.857	0.194	0.088	3.64	95	1.2	-	5.84	-0.08	88	315	75	67
150	28.051	0.194	0.088	3.63	95	1.2	101	5.79	-0.05	88	313	75	66
151	28.245	0.194	0.088	3.63	95	1.2	-	5.73	-0.06	87	312	75	66
152	28.438	0.193	0.088	3.65	95	1.2	-	5.67	-0.06	87	310	75	67
153	28.633	0.195	0.088	3.65	95	1.2	-	5.62	-0.05	87	305	75	67
154	28.827	0.194	0.087	3.66	95	1.2	-	5.55	-0.07	87	304	75	67
155	29.020	0.193	0.089	3.65	96	1.2	-	5.49	-0.06	87	301	75	67
156	29.213	0.193	0.088	3.66	96	1.2	-	5.44	-0.05	86	302	75	67
157	29.407	0.194	0.087	3.66	96	1.2	-	5.39	-0.05	86	301	75	67
158	29.601	0.194	0.087	3.65	96	1.2	-	5.33	-0.06	86	299	74	67
159	29.793	0.192	0.091	3.65	96	1.2	-	5.30	-0.03	86	296	74	67

BOX A TEST DATA - ASTM E2780 / ASTM E2515

Client: IHP
Model: I3000
Run #: 5

Job #: 23-229
Tracking #: 169
Technician: AK
Date: 12/18/2023

	Particulate Sampling Data							Fuel Weight (lb)		Temperature Data (°F)			
Elapsed Time (min)	Gas Meter (ft^3)	Sample Rate (cfm)	Dilution Tunnel dP (in H_2O)	Orifice dH (in H_2O)	Meter Temp (°F)	Meter Vacuum (in Hg)	Pro. Rate (%)	Scale Reading	Weight Change	Dilution Tunnel	Flue	Filter	Ambient
160	29.986	0.193	0.088	3.66	96	1.2	101	5.24	-0.06	87	296	74	66
161	30.179	0.193	0.087	3.65	96	1.2	-	5.20	-0.04	87	295	75	67
162	30.373	0.194	0.088	3.64	96	1.2	-	5.15	-0.05	86	295	75	66
163	30.566	0.193	0.087	3.66	96	1.2	-	5.10	-0.05	86	295	74	66
164	30.760	0.194	0.087	3.66	96	1.2	-	5.04	-0.06	86	294	74	67
165	30.954	0.194	0.088	3.67	96	1.2	-	4.99	-0.05	86	294	74	66
166	31.149	0.195	0.088	3.66	96	1.2	-	4.95	-0.04	85	294	74	66
167	31.343	0.194	0.090	3.64	96	1.2	-	4.91	-0.04	85	293	74	66
168	31.536	0.193	0.089	3.64	96	1.2	-	4.85	-0.06	85	293	74	66
169	31.731	0.195	0.088	3.65	96	1.1	-	4.81	-0.04	85	293	74	66
170	31.926	0.195	0.090	3.64	96	1.1	100	4.76	-0.05	86	292	74	66
171	32.120	0.194	0.089	3.65	96	1.2	-	4.72	-0.04	86	292	74	67
172	32.313	0.193	0.087	3.66	96	1.2	-	4.66	-0.06	86	292	74	66
173	32.507	0.194	0.088	3.65	96	1.2	-	4.61	-0.05	86	292	74	66
174	32.701	0.194	0.088	3.65	96	1.2	-	4.57	-0.04	86	293	74	66
175	32.894	0.193	0.088	3.65	96	1.2	-	4.52	-0.05	85	292	74	66
176	33.087	0.193	0.088	3.65	96	1.1	-	4.46	-0.06	85	291	74	66
177	33.280	0.193	0.087	3.65	96	1.2	-	4.42	-0.04	85	289	74	66
178	33.475	0.195	0.091	3.68	97	1.2	-	4.39	-0.03	84	287	74	66
179	33.669	0.194	0.089	3.66	97	1.1	-	4.35	-0.04	84	287	74	66
180	33.862	0.193	0.089	3.65	96	1.2	100	4.32	-0.03	85	285	74	66
181	34.056	0.194	0.089	3.66	97	1.2	-	4.28	-0.04	86	286	74	66
182	34.251	0.195	0.087	3.65	97	1.2	-	4.25	-0.03	86	283	74	66
183	34.446	0.195	0.088	3.65	97	1.2	-	4.20	-0.05	85	281	74	66
184	34.640	0.194	0.088	3.65	97	1.2	-	4.19	-0.01	85	282	74	66
185	34.834	0.194	0.089	3.66	97	1.2	-	4.15	-0.04	84	281	74	66
186	35.029	0.195	0.089	3.66	97	1.2	-	4.13	-0.02	84	280	74	66
187	35.224	0.195	0.088	3.66	97	1.1	-	4.08	-0.05	84	278	74	66
188	35.418	0.194	0.088	3.66	97	1.2	-	4.06	-0.02	83	277	74	66
189	35.612	0.194	0.090	3.66	97	1.2	-	4.03	-0.03	83	274	74	66
190	35.805	0.193	0.090	3.67	97	1.1	100	4.01	-0.02	84	273	73	66
191	36.001	0.196	0.089	3.65	97	1.2	-	3.98	-0.03	84	272	74	66

BOX A TEST DATA - ASTM E2780 / ASTM E2515

Client: IHP
Model: I3000
Run #: 5

Job #: 23-229
Tracking #: 169
Technician: AK
Date: 12/18/2023

	Particulate Sampling Data							Fuel Weight (lb)		Temperature Data (°F)			
Elapsed Time (min)	Gas Meter (ft^3)	Sample Rate (cfm)	Dilution Tunnel dP (in H_2O)	Orifice dH (in H_2O)	Meter Temp (°F)	Meter Vacuum (in Hg)	Pro. Rate (%)	Scale Reading	Weight Change	Dilution Tunnel	Flue	Filter	Ambient
192	36.194	0.193	0.086	3.67	97	1.2	-	3.95	-0.03	84	269	74	66
193	36.387	0.193	0.088	3.66	97	1.2	-	3.92	-0.03	84	267	74	66
194	36.581	0.194	0.090	3.67	97	1.2	-	3.90	-0.02	84	267	74	66
195	36.775	0.194	0.090	3.66	97	1.1	-	3.89	-0.01	83	265	73	66
196	36.969	0.194	0.088	3.66	97	1.1	-	3.85	-0.04	83	264	73	66
197	37.163	0.194	0.090	3.65	97	1.2	-	3.84	-0.01	83	264	73	65
198	37.356	0.193	0.088	3.66	97	1.2	-	3.81	-0.03	82	262	73	66
199	37.551	0.195	0.088	3.67	97	1.1	-	3.79	-0.02	82	261	73	66
200	37.747	0.196	0.087	3.66	97	1.2	100	3.77	-0.02	83	260	73	66
201	37.942	0.195	0.090	3.65	97	1.2	-	3.75	-0.02	83	258	73	66
202	38.135	0.193	0.089	3.66	97	1.2	-	3.72	-0.03	83	256	73	66
203	38.330	0.195	0.088	3.67	97	1.1	-	3.71	-0.01	83	254	73	66
204	38.526	0.196	0.089	3.67	97	1.2	-	3.69	-0.02	83	254	73	66
205	38.721	0.195	0.089	3.66	97	1.2	-	3.68	-0.01	83	254	73	66
206	38.915	0.194	0.090	3.65	97	1.2	-	3.64	-0.04	82	252	73	66
207	39.108	0.193	0.089	3.67	97	1.2	-	3.63	-0.01	82	252	73	65
208	39.302	0.194	0.089	3.66	97	1.2	-	3.61	-0.02	82	250	73	65
209	39.498	0.196	0.090	3.66	97	1.2	-	3.59	-0.02	81	250	73	65
210	39.692	0.194	0.089	3.66	97	1.2	101	3.57	-0.02	82	248	73	66
211	39.884	0.192	0.088	3.66	97	1.2	-	3.55	-0.02	83	248	73	66
212	40.079	0.195	0.088	3.67	97	1.2	-	3.54	-0.01	83	246	73	66
213	40.273	0.194	0.088	3.66	97	1.2	-	3.51	-0.03	82	246	73	66
214	40.467	0.194	0.088	3.66	97	1.1	-	3.49	-0.02	82	246	73	66
215	40.661	0.194	0.089	3.66	97	1.2	-	3.49	0.00	81	244	73	66
216	40.855	0.194	0.090	3.66	97	1.1	-	3.46	-0.03	81	244	73	66
217	41.050	0.195	0.090	3.67	97	1.2	-	3.44	-0.02	81	243	73	66
218	41.246	0.196	0.089	3.67	97	1.2	-	3.42	-0.02	82	241	73	66
219	41.441	0.195	0.089	3.67	97	1.1	-	3.41	-0.01	82	240	73	66
220	41.635	0.194	0.087	3.66	97	1.2	101	3.38	-0.03	82	240	73	65
221	41.830	0.195	0.089	3.66	97	1.1	-	3.36	-0.02	82	240	73	66
222	42.025	0.195	0.090	3.67	97	1.2	-	3.35	-0.01	81	240	73	66
223	42.221	0.196	0.090	3.66	97	1.1	-	3.33	-0.02	81	239	73	66

BOX A TEST DATA - ASTM E2780 / ASTM E2515

Client: IHP
Model: I3000
Run #: 5

Job #: 23-229
Tracking #: 169
Technician: AK
Date: 12/18/2023

	Particulate Sampling Data							Fuel Weight (lb)		Temperature Data (°F)			
Elapsed Time (min)	Gas Meter (ft^3)	Sample Rate (cfm)	Dilution Tunnel dP (in H_2O)	Orifice dH (in H_2O)	Meter Temp (°F)	Meter Vacuum (in Hg)	Pro. Rate (%)	Scale Reading	Weight Change	Dilution Tunnel	Flue	Filter	Ambient
224	42.416	0.195	0.089	3.65	97	1.1	-	3.31	-0.02	81	238	72	65
225	42.609	0.193	0.090	3.66	97	1.2	-	3.29	-0.02	81	238	72	65
226	42.804	0.195	0.089	3.68	97	1.2	-	3.28	-0.01	81	235	72	65
227	42.999	0.195	0.088	3.66	97	1.2	-	3.26	-0.02	82	235	72	65
228	43.193	0.194	0.089	3.66	97	1.2	-	3.23	-0.03	81	235	72	65
229	43.387	0.194	0.087	3.66	97	1.2	-	3.21	-0.02	81	235	72	65
230	43.580	0.193	0.090	3.66	97	1.1	100	3.20	-0.01	81	235	72	65
231	43.774	0.194	0.089	3.67	97	1.2	-	3.19	-0.01	80	234	72	65
232	43.969	0.195	0.088	3.67	97	1.2	-	3.16	-0.03	80	233	72	65
233	44.164	0.195	0.092	3.64	97	1.2	-	3.15	-0.01	80	233	72	65
234	44.358	0.194	0.089	3.66	97	1.2	-	3.13	-0.02	81	232	72	65
235	44.552	0.194	0.090	3.67	97	1.2	-	3.12	-0.01	81	231	72	65
236	44.747	0.195	0.087	3.67	97	1.1	-	3.10	-0.02	81	231	72	65
237	44.943	0.196	0.090	3.66	97	1.2	-	3.08	-0.02	81	231	72	65
238	45.138	0.195	0.090	3.65	97	1.2	-	3.06	-0.02	81	230	72	65
239	45.333	0.195	0.090	3.67	97	1.2	-	3.04	-0.02	80	230	72	65
240	45.527	0.194	0.088	3.66	97	1.2	100	3.02	-0.02	80	231	72	65
241	45.722	0.195	0.089	3.66	97	1.2	-	2.98	-0.04	80	229	72	65
242	45.919	0.197	0.090	3.67	97	1.2	-	2.97	-0.01	80	228	72	65
243	46.113	0.194	0.088	3.67	97	1.1	-	2.95	-0.02	81	227	72	65
244	46.307	0.194	0.088	3.67	97	1.2	-	2.93	-0.02	81	225	72	65
245	46.502	0.195	0.088	3.68	97	1.1	-	2.92	-0.01	81	225	72	65
246	46.697	0.195	0.087	3.68	97	1.2	-	2.90	-0.02	80	225	72	65
247	46.892	0.195	0.089	3.66	97	1.2	-	2.87	-0.03	80	224	72	65
248	47.086	0.194	0.090	3.67	97	1.1	-	2.86	-0.01	80	223	72	65
249	47.279	0.193	0.090	3.67	97	1.2	-	2.84	-0.02	80	223	72	65
250	47.474	0.195	0.089	3.67	97	1.2	100	2.81	-0.03	81	223	72	65
251	47.668	0.194	0.087	3.67	97	1.1	-	2.80	-0.01	81	222	72	65
252	47.864	0.196	0.087	3.67	97	1.2	-	2.78	-0.02	81	221	72	65
253	48.058	0.194	0.088	3.66	97	1.2	-	2.76	-0.02	80	220	72	65
254	48.252	0.194	0.088	3.65	97	1.1	-	2.75	-0.01	80	221	72	65
255	48.447	0.195	0.088	3.68	97	1.2	-	2.73	-0.02	79	221	72	65

BOX A TEST DATA - ASTM E2780 / ASTM E2515

Client: IHP
Model: I3000
Run #: 5

Job #: 23-229
Tracking #: 169
Technician: AK
Date: 12/18/2023

	Particulate Sampling Data							Fuel Weight (lb)		Temperature Data (°F)			
Elapsed Time (min)	Gas Meter (ft^3)	Sample Rate (cfm)	Dilution Tunnel dP (in H_2O)	Orifice dH (in H_2O)	Meter Temp (°F)	Meter Vacuum (in Hg)	Pro. Rate (%)	Scale Reading	Weight Change	Dilution Tunnel	Flue	Filter	Ambient
256	48.642	0.195	0.088	3.66	97	1.2	-	2.71	-0.02	79	220	72	65
257	48.838	0.196	0.089	3.66	97	1.2	-	2.69	-0.02	80	220	72	65
258	49.033	0.195	0.090	3.66	97	1.2	-	2.68	-0.01	81	219	72	65
259	49.228	0.195	0.089	3.65	97	1.2	-	2.66	-0.02	81	219	72	65
260	49.423	0.195	0.088	3.67	97	1.2	100	2.64	-0.02	80	218	72	65
261	49.619	0.196	0.089	3.66	97	1.2	-	2.62	-0.02	80	219	72	65
262	49.814	0.195	0.090	3.66	97	1.2	-	2.60	-0.02	80	219	72	65
263	50.009	0.195	0.090	3.66	97	1.2	-	2.58	-0.02	79	219	72	65
264	50.204	0.195	0.091	3.66	97	1.2	-	2.57	-0.01	79	219	72	65
265	50.399	0.195	0.090	3.67	97	1.2	-	2.54	-0.03	80	217	72	65
266	50.593	0.194	0.088	3.67	97	1.2	-	2.53	-0.01	80	217	72	65
267	50.789	0.196	0.088	3.67	97	1.1	-	2.52	-0.01	81	217	72	65
268	50.983	0.194	0.088	3.68	97	1.1	-	2.49	-0.03	80	217	72	65
269	51.176	0.193	0.088	3.67	97	1.2	-	2.48	-0.01	79	217	72	65
270	51.371	0.195	0.090	3.67	97	1.2	100	2.46	-0.02	79	217	72	65
271	51.565	0.194	0.088	3.65	97	1.2	-	2.44	-0.02	79	216	72	65
272	51.761	0.196	0.089	3.65	97	1.2	-	2.43	-0.01	79	216	72	65
273	51.956	0.195	0.091	3.67	97	1.2	-	2.41	-0.02	80	215	72	65
274	52.149	0.193	0.086	3.68	97	1.2	-	2.39	-0.02	80	214	72	65
275	52.345	0.196	0.087	3.67	97	1.2	-	2.38	-0.01	80	215	72	65
276	52.540	0.195	0.090	3.67	97	1.1	-	2.34	-0.04	80	215	72	65
277	52.737	0.197	0.090	3.67	97	1.2	-	2.35	0.01	79	214	72	65
278	52.932	0.195	0.089	3.68	97	1.2	-	2.33	-0.02	79	215	72	65
279	53.126	0.194	0.090	3.66	97	1.2	-	2.31	-0.02	79	213	72	65
280	53.321	0.195	0.089	3.66	97	1.2	100	2.29	-0.02	80	213	72	65
281	53.517	0.196	0.089	3.66	97	1.2	-	2.27	-0.02	80	213	72	65
282	53.713	0.196	0.089	3.67	97	1.2	-	2.26	-0.01	80	214	72	65
283	53.908	0.195	0.089	3.67	97	1.2	-	2.23	-0.03	80	213	72	65
284	54.103	0.195	0.090	3.67	97	1.1	-	2.22	-0.01	79	213	72	65
285	54.298	0.195	0.087	3.67	97	1.1	-	2.22	0.00	79	213	72	65
286	54.492	0.194	0.088	3.67	97	1.1	-	2.19	-0.03	79	213	72	65
287	54.689	0.197	0.088	3.66	97	1.2	-	2.17	-0.02	79	212	72	65

BOX A TEST DATA - ASTM E2780 / ASTM E2515

Client: IHP
Model: I3000
Run #: 5

Job #: 23-229
Tracking #: 169
Technician: AK
Date: 12/18/2023

	Particulate Sampling Data							Fuel Weight (lb)		Temperature Data (°F)			
Elapsed Time (min)	Gas Meter (ft^3)	Sample Rate (cfm)	Dilution Tunnel dP (in H_2O)	Orifice dH (in H_2O)	Meter Temp (°F)	Meter Vacuum (in Hg)	Pro. Rate (%)	Scale Reading	Weight Change	Dilution Tunnel	Flue	Filter	Ambient
288	54.883	0.194	0.088	3.66	97	1.2	-	2.16	-0.01	80	212	72	65
289	55.077	0.194	0.087	3.66	97	1.1	-	2.15	-0.01	80	210	72	65
290	55.270	0.193	0.086	3.66	97	1.2	101	2.13	-0.02	80	210	72	65
291	55.464	0.194	0.090	3.66	97	1.2	-	2.11	-0.02	79	210	72	65
292	55.660	0.196	0.089	3.67	97	1.1	-	2.10	-0.01	79	210	72	65
293	55.854	0.194	0.089	3.67	97	1.2	-	2.08	-0.02	79	211	71	65
294	56.048	0.194	0.088	3.66	97	1.2	-	2.07	-0.01	78	211	71	65
295	56.243	0.195	0.087	3.66	97	1.2	-	2.05	-0.02	79	212	71	65
296	56.438	0.195	0.090	3.66	97	1.1	-	2.03	-0.02	80	211	72	65
297	56.634	0.196	0.086	3.67	97	1.2	-	2.02	-0.01	80	211	71	65
298	56.829	0.195	0.087	3.67	97	1.1	-	2.00	-0.02	80	210	72	65
299	57.024	0.195	0.090	3.66	97	1.2	-	1.99	-0.01	79	211	72	65
300	57.219	0.195	0.088	3.66	97	1.2	101	1.97	-0.02	79	212	71	65
301	57.414	0.195	0.090	3.67	97	1.2	-	1.95	-0.02	79	211	71	65
302	57.611	0.197	0.091	3.67	97	1.2	-	1.95	0.00	79	211	71	65
303	57.805	0.194	0.088	3.67	97	1.1	-	1.92	-0.03	80	211	71	65
304	58.000	0.195	0.088	3.66	97	1.2	-	1.92	0.00	80	211	71	65
305	58.194	0.194	0.087	3.67	97	1.2	-	1.90	-0.02	80	210	71	65
306	58.389	0.195	0.090	3.67	97	1.1	-	1.88	-0.02	80	210	71	65
307	58.585	0.196	0.088	3.67	97	1.2	-	1.86	-0.02	79	211	71	65
308	58.779	0.194	0.088	3.67	97	1.2	-	1.85	-0.01	79	212	71	65
309	58.973	0.194	0.090	3.66	97	1.1	-	1.83	-0.02	78	212	71	65
310	59.167	0.194	0.087	3.67	97	1.2	101	1.82	-0.01	79	211	71	65
311	59.361	0.194	0.089	3.67	97	1.2	-	1.80	-0.02	80	211	71	65
312	59.558	0.197	0.088	3.67	97	1.1	-	1.80	0.00	80	210	71	65
313	59.752	0.194	0.088	3.66	97	1.2	-	1.77	-0.03	80	210	72	65
314	59.947	0.195	0.091	3.66	97	1.1	-	1.75	-0.02	80	210	71	65
315	60.141	0.194	0.089	3.66	97	1.2	-	1.74	-0.01	79	209	71	65
316	60.336	0.195	0.088	3.67	97	1.1	-	1.73	-0.01	79	209	71	65
317	60.533	0.197	0.089	3.67	97	1.1	-	1.71	-0.02	79	209	71	65
318	60.728	0.195	0.090	3.67	97	1.2	-	1.69	-0.02	79	209	71	65
319	60.923	0.195	0.088	3.65	97	1.1	-	1.68	-0.01	80	208	71	65

BOX A TEST DATA - ASTM E2780 / ASTM E2515

Client: IHP
Model: I3000
Run #: 5

Job #: 23-229
Tracking #: 169
Technician: AK
Date: 12/18/2023

	Particulate Sampling Data							Fuel Weight (lb)		Temperature Data (°F)			
Elapsed Time (min)	Gas Meter (ft^3)	Sample Rate (cfm)	Dilution Tunnel dP (in H_2O)	Orifice dH (in H_2O)	Meter Temp (°F)	Meter Vacuum (in Hg)	Pro. Rate (%)	Scale Reading	Weight Change	Dilution Tunnel	Flue	Filter	Ambient
320	61.117	0.194	0.088	3.66	97	1.1	101	1.66	-0.02	80	208	71	65
321	61.313	0.196	0.088	3.66	97	1.2	-	1.65	-0.01	80	208	71	65
322	61.509	0.196	0.089	3.67	97	1.2	-	1.64	-0.01	79	209	71	65
323	61.705	0.196	0.089	3.65	97	1.1	-	1.62	-0.02	79	209	71	65
324	61.900	0.195	0.090	3.65	97	1.1	-	1.60	-0.02	79	208	71	65
325	62.094	0.194	0.089	3.67	97	1.1	-	1.60	0.00	79	208	71	65
326	62.289	0.195	0.088	3.67	97	1.2	-	1.58	-0.02	80	207	71	65
327	62.484	0.195	0.087	3.66	97	1.2	-	1.56	-0.02	80	206	71	65
328	62.679	0.195	0.088	3.66	97	1.2	-	1.54	-0.02	80	206	71	65
329	62.873	0.194	0.090	3.66	97	1.2	-	1.53	-0.01	79	206	71	65
330	63.067	0.194	0.089	3.66	97	1.1	100	1.52	-0.01	79	205	71	65
331	63.262	0.195	0.088	3.67	97	1.2	-	1.51	-0.01	78	205	71	65
332	63.457	0.195	0.090	3.67	97	1.2	-	1.50	-0.01	79	205	71	65
333	63.652	0.195	0.089	3.66	97	1.2	-	1.47	-0.03	80	205	71	65
334	63.847	0.195	0.089	3.67	97	1.2	-	1.46	-0.01	80	204	71	65
335	64.041	0.194	0.089	3.66	97	1.2	-	1.44	-0.02	80	204	71	65
336	64.236	0.195	0.089	3.67	97	1.2	-	1.43	-0.01	80	204	71	65
337	64.432	0.196	0.090	3.65	97	1.1	-	1.43	0.00	79	203	71	65
338	64.628	0.196	0.088	3.67	97	1.2	-	1.41	-0.02	79	204	71	65
339	64.823	0.195	0.089	3.66	97	1.2	-	1.39	-0.02	79	204	71	65
340	65.017	0.194	0.088	3.67	97	1.1	100	1.38	-0.01	80	203	71	65
341	65.213	0.196	0.089	3.67	97	1.1	-	1.36	-0.02	80	203	71	65
342	65.409	0.196	0.088	3.67	97	1.2	-	1.35	-0.01	80	203	71	65
343	65.605	0.196	0.089	3.66	97	1.2	-	1.34	-0.01	79	203	71	65
344	65.800	0.195	0.089	3.66	97	1.2	-	1.32	-0.02	79	203	71	65
345	65.995	0.195	0.088	3.67	97	1.2	-	1.31	-0.01	79	203	71	65
346	66.189	0.194	0.088	3.67	97	1.2	-	1.30	-0.01	80	203	71	65
347	66.384	0.195	0.090	3.66	97	1.2	-	1.28	-0.02	80	202	71	65
348	66.581	0.197	0.088	3.67	97	1.1	-	1.27	-0.01	80	202	71	65
349	66.775	0.194	0.089	3.66	97	1.2	-	1.25	-0.02	80	202	71	65
350	66.969	0.194	0.090	3.65	97	1.2	100	1.24	-0.01	79	202	71	65
351	67.163	0.194	0.089	3.66	97	1.1	-	1.23	-0.01	78	202	71	65

BOX A TEST DATA - ASTM E2780 / ASTM E2515

Client: IHP
Model: I3000
Run #: 5

Job #: 23-229
Tracking #: 169
Technician: AK
Date: 12/18/2023

	Particulate Sampling Data							Fuel Weight (lb)		Temperature Data (°F)			
Elapsed Time (min)	Gas Meter (ft^3)	Sample Rate (cfm)	Dilution Tunnel dP (in H_2O)	Orifice dH (in H_2O)	Meter Temp (°F)	Meter Vacuum (in Hg)	Pro. Rate (%)	Scale Reading	Weight Change	Dilution Tunnel	Flue	Filter	Ambient
352	67.357	0.194	0.089	3.66	97	1.2	-	1.22	-0.01	79	202	71	65
353	67.553	0.196	0.089	3.68	97	1.1	-	1.20	-0.02	79	202	71	65
354	67.748	0.195	0.089	3.67	97	1.2	-	1.19	-0.01	80	201	71	65
355	67.942	0.194	0.088	3.66	97	1.2	-	1.17	-0.02	80	200	71	65
356	68.136	0.194	0.087	3.66	97	1.2	-	1.17	0.00	80	200	71	65
357	68.332	0.196	0.088	3.65	97	1.1	-	1.14	-0.03	79	200	71	65
358	68.528	0.196	0.091	3.66	97	1.2	-	1.13	-0.01	79	200	71	65
359	68.724	0.196	0.089	3.66	97	1.2	-	1.12	-0.01	79	200	71	65
360	68.919	0.195	0.089	3.66	97	1.2	100	1.12	0.00	80	200	71	65
361	69.114	0.195	0.089	3.67	97	1.2	-	1.10	-0.02	80	199	71	65
362	69.309	0.195	0.088	3.66	97	1.1	-	1.09	-0.01	80	199	71	65
363	69.505	0.196	0.088	3.67	97	1.2	-	1.08	-0.01	80	198	71	65
364	69.701	0.196	0.086	3.65	97	1.1	-	1.06	-0.02	79	198	71	65
365	69.896	0.195	0.090	3.67	97	1.2	-	1.05	-0.01	78	198	71	65
366	70.091	0.195	0.088	3.65	97	1.1	-	1.03	-0.02	78	197	71	65
367	70.286	0.195	0.088	3.65	97	1.1	-	1.04	0.01	79	197	71	65
368	70.480	0.194	0.089	3.66	97	1.1	-	1.01	-0.03	79	196	71	65
369	70.677	0.197	0.089	3.66	97	1.2	-	1.00	-0.01	80	195	71	65
370	70.871	0.194	0.088	3.65	97	1.2	100	0.98	-0.02	80	195	71	65
371	71.064	0.193	0.087	3.66	97	1.2	-	0.98	0.00	79	195	71	65
372	71.258	0.194	0.089	3.67	97	1.2	-	0.96	-0.02	79	195	71	65
373	71.453	0.195	0.090	3.65	97	1.2	-	0.95	-0.01	78	193	71	65
374	71.649	0.196	0.089	3.65	97	1.2	-	0.94	-0.01	79	193	71	65
375	71.843	0.194	0.089	3.65	97	1.1	-	0.93	-0.01	79	193	71	65
376	72.038	0.195	0.087	3.65	97	1.2	-	0.92	-0.01	80	192	71	65
377	72.232	0.194	0.088	3.67	97	1.2	-	0.91	-0.01	80	193	71	65
378	72.427	0.195	0.088	3.65	97	1.1	-	0.90	-0.01	79	192	71	65
379	72.624	0.197	0.089	3.66	97	1.2	-	0.88	-0.02	78	192	71	65
380	72.819	0.195	0.088	3.66	97	1.2	100	0.87	-0.01	78	192	71	65
381	73.014	0.195	0.091	3.66	97	1.2	-	0.86	-0.01	79	192	71	65
382	73.209	0.195	0.088	3.66	97	1.2	-	0.86	0.00	80	192	71	65
383	73.404	0.195	0.088	3.67	97	1.2	-	0.84	-0.02	80	192	71	65

BOX A TEST DATA - ASTM E2780 / ASTM E2515

Client: IHP
Model: I3000
Run #: 5

Job #: 23-229
Tracking #: 169
Technician: AK
Date: 12/18/2023

	Particulate Sampling Data							Fuel Weight (lb)		Temperature Data (°F)			
Elapsed Time (min)	Gas Meter (ft^3)	Sample Rate (cfm)	Dilution Tunnel dP (in H_2O)	Orifice dH (in H_2O)	Meter Temp (°F)	Meter Vacuum (in Hg)	Pro. Rate (%)	Scale Reading	Weight Change	Dilution Tunnel	Flue	Filter	Ambient
384	73.601	0.197	0.088	3.66	97	1.2	-	0.83	-0.01	80	191	71	65
385	73.796	0.195	0.087	3.66	97	1.2	-	0.82	-0.01	79	191	71	65
386	73.991	0.195	0.088	3.65	97	1.1	-	0.81	-0.01	78	191	71	65
387	74.185	0.194	0.091	3.64	97	1.1	-	0.80	-0.01	79	191	71	65
388	74.380	0.195	0.088	3.65	97	1.2	-	0.79	-0.01	79	190	71	65
389	74.576	0.196	0.088	3.66	97	1.2	-	0.78	-0.01	80	189	71	65
390	74.770	0.194	0.086	3.65	97	1.1	101	0.76	-0.02	80	189	71	65
391	74.964	0.194	0.089	3.64	97	1.2	-	0.75	-0.01	79	188	71	65
392	75.158	0.194	0.089	3.65	97	1.2	-	0.74	-0.01	78	189	71	65
393	75.353	0.195	0.088	3.65	97	1.1	-	0.73	-0.01	79	188	71	65
394	75.548	0.195	0.089	3.66	97	1.1	-	0.72	-0.01	79	188	71	65
395	75.743	0.195	0.089	3.65	97	1.1	-	0.71	-0.01	80	188	71	65
396	75.937	0.194	0.087	3.65	97	1.1	-	0.71	0.00	80	188	71	65
397	76.131	0.194	0.087	3.66	97	1.2	-	0.69	-0.02	79	188	71	65
398	76.327	0.196	0.088	3.66	97	1.1	-	0.68	-0.01	78	188	71	65
399	76.523	0.196	0.090	3.67	97	1.2	-	0.66	-0.02	78	188	71	65
400	76.719	0.196	0.090	3.65	97	1.2	101	0.66	0.00	79	187	71	65
401	76.914	0.195	0.089	3.65	97	1.2	-	0.64	-0.02	79	186	71	65
402	77.108	0.194	0.088	3.64	97	1.2	-	0.64	0.00	80	187	71	65
403	77.304	0.196	0.087	3.66	97	1.2	-	0.62	-0.02	80	186	71	65
404	77.500	0.196	0.088	3.65	97	1.2	-	0.61	-0.01	79	186	71	65
405	77.696	0.196	0.087	3.67	97	1.2	-	0.61	0.00	78	187	71	65
406	77.891	0.195	0.090	3.66	97	1.2	-	0.59	-0.02	78	186	71	65
407	78.085	0.194	0.090	3.66	97	1.1	-	0.58	-0.01	79	185	71	65
408	78.280	0.195	0.089	3.67	97	1.1	-	0.57	-0.01	79	185	71	65
409	78.475	0.195	0.088	3.67	97	1.2	-	0.55	-0.02	80	186	71	65
410	78.672	0.197	0.088	3.67	97	1.2	100	0.54	-0.01	79	186	71	65
411	78.866	0.194	0.088	3.66	97	1.2	-	0.52	-0.02	78	185	71	65
412	79.060	0.194	0.091	3.65	97	1.2	-	0.51	-0.01	78	186	71	65
413	79.253	0.193	0.089	3.66	97	1.1	-	0.50	-0.01	79	186	71	65
414	79.448	0.195	0.088	3.66	97	1.1	-	0.49	-0.01	79	185	71	65
415	79.644	0.196	0.089	3.66	97	1.2	-	0.47	-0.02	80	184	71	65

BOX A TEST DATA - ASTM E2780 / ASTM E2515

Client: IHP
Model: I3000
Run #: 5

Job #: 23-229
Tracking #: 169
Technician: AK
Date: 12/18/2023

	Particulate Sampling Data							Fuel Weight (lb)		Temperature Data (°F)			
Elapsed Time (min)	Gas Meter (ft^3)	Sample Rate (cfm)	Dilution Tunnel dP (in H_2O)	Orifice dH (in H_2O)	Meter Temp (°F)	Meter Vacuum (in Hg)	Pro. Rate (%)	Scale Reading	Weight Change	Dilution Tunnel	Flue	Filter	Ambient
416	79.839	0.195	0.088	3.65	97	1.1	-	0.46	-0.01	80	185	71	65
417	80.033	0.194	0.087	3.64	97	1.2	-	0.45	-0.01	79	185	71	65
418	80.227	0.194	0.087	3.66	97	1.1	-	0.44	-0.01	78	184	71	64
419	80.423	0.196	0.089	3.66	97	1.2	-	0.43	-0.01	78	185	71	65
420	80.619	0.196	0.090	3.67	97	1.2	100	0.41	-0.02	79	185	71	65
421	80.815	0.196	0.089	3.66	97	1.1	-	0.40	-0.01	79	185	71	65
422	81.010	0.195	0.089	3.66	97	1.1	-	0.38	-0.02	80	186	71	65
423	81.205	0.195	0.087	3.66	97	1.2	-	0.38	0.00	79	185	71	64
424	81.401	0.196	0.087	3.66	97	1.1	-	0.36	-0.02	79	185	71	65
425	81.597	0.196	0.090	3.66	97	1.2	-	0.35	-0.01	78	185	71	65
426	81.793	0.196	0.090	3.65	97	1.1	-	0.34	-0.01	79	185	71	65
427	81.988	0.195	0.090	3.67	97	1.1	-	0.32	-0.02	79	185	71	65
428	82.182	0.194	0.089	3.65	97	1.2	-	0.31	-0.01	79	184	71	64
429	82.377	0.195	0.088	3.66	97	1.2	-	0.31	0.00	80	185	71	65
430	82.572	0.195	0.089	3.65	97	1.2	100	0.29	-0.02	79	185	71	65
431	82.764	0.192	0.089	3.66	97	1.2	-	0.27	-0.02	78	185	71	65
432	82.962	0.198	0.089	3.66	97	1.2	-	0.26	-0.01	77	185	71	65
433	83.156	0.194	0.088	3.66	97	1.1	-	0.25	-0.01	78	185	71	64
434	83.350	0.194	0.089	3.66	97	1.2	-	0.23	-0.02	79	184	71	65
435	83.544	0.194	0.087	3.65	97	1.1	-	0.23	0.00	79	184	71	64
436	83.741	0.197	0.090	3.65	97	1.2	-	0.21	-0.02	80	184	71	64
437	83.935	0.194	0.088	3.66	97	1.2	-	0.20	-0.01	80	184	71	64
438	84.130	0.195	0.088	3.64	97	1.2	-	0.18	-0.02	79	183	71	65
439	84.324	0.194	0.088	3.64	97	1.1	-	0.17	-0.01	78	184	71	65
440	84.519	0.195	0.087	3.65	97	1.2	100	0.16	-0.01	78	185	71	64
441	84.716	0.197	0.087	3.66	97	1.2	-	0.14	-0.02	79	184	71	64
442	84.911	0.195	0.088	3.65	97	1.2	-	0.11	-0.03	79	184	71	65
443	85.106	0.195	0.087	3.64	97	1.2	-	0.11	0.00	80	184	71	65
444	85.301	0.195	0.088	3.66	97	1.1	-	0.08	-0.03	79	184	71	64
445	85.497	0.196	0.087	3.67	97	1.1	-	0.06	-0.02	78	184	71	65
446	85.693	0.196	0.089	3.66	97	1.2	-	0.05	-0.01	78	183	71	65
447	85.888	0.195	0.090	3.65	97	1.2	-	0.03	-0.02	78	183	71	65

BOX A TEST DATA - ASTM E2780 / ASTM E2515

Client: IHP
Model: I3000
Run #: 5

Job #: 23-229
Tracking #: 169
Technician: AK
Date: 12/18/2023

	Particulate Sampling Data							Fuel Weight (lb)		Temperature Data (°F)			
Elapsed Time (min)	Gas Meter (ft^3)	Sample Rate (cfm)	Dilution Tunnel dP (in H_2O)	Orifice dH (in H_2O)	Meter Temp (°F)	Meter Vacuum (in Hg)	Pro. Rate (%)	Scale Reading	Weight Change	Dilution Tunnel	Flue	Filter	Ambient
448	86.083	0.195	0.088	3.64	97	1.2	101	0.00	-0.03	79	182	71	65
Avg/Tot	86.083	0.192	0.088	3.61	93.0	1.2	100			83.1	251.8	72.1	64.6

BOX B TEST DATA - ASTM E2780 / ASTM E2515

Client: IHP
Model: I3000
Run #: 5

Job #: 23-229
Tracking #: 169
Technician: AK
Date: 12/18/2023

	Particulate Sampling Data							Flue Gas Data		
Elapsed Time (min)	Gas Meter (ft^3)	Sample Rate (cfm)	Orifice dH (in H_2O)	Meter Temp (°F)	Meter Vacuum (in Hg)	Pro. Rate (%)	Filter (°F)	Flue Draft (in H_2O)	CO_2 (%)	CO (%)
0	-0.002		2.20	72	1.6		69	-0.057	3.83	0.040
1	0.131	0.133	3.24	72	1.8	-	72	-0.058	2.77	0.041
2	0.304	0.173	3.22	72	2.0	-	72	-0.060	4.38	0.463
3	0.480	0.176	3.22	72	2.1	-	72	-0.067	7.83	0.221
4	0.656	0.176	3.22	72	1.8	-	72	-0.070	9.22	0.118
5	0.832	0.176	3.21	72	1.9	-	73	-0.074	9.49	0.118
6	1.005	0.173	3.21	72	1.8	-	72	-0.063	9.47	0.117
7	1.179	0.174	3.22	71	2.1	-	72	-0.062	6.23	0.036
8	1.357	0.178	3.24	72	1.9	-	72	-0.060	5.87	0.032
9	1.534	0.177	3.23	72	1.7	-	72	-0.061	5.95	0.038
10	1.709	0.175	3.23	72	2.2	97	72	-0.060	6.11	0.039
11	1.883	0.174	3.22	72	1.6	-	72	-0.058	6.24	0.041
12	2.060	0.177	3.23	72	2.1	-	72	-0.059	6.33	0.048
13	2.237	0.177	3.24	72	1.6	-	71	-0.058	6.41	0.056
14	2.412	0.175	3.24	72	2.1	-	71	-0.059	6.48	0.042
15	2.586	0.174	3.23	72	2.2	-	71	-0.060	6.57	0.042
16	2.762	0.176	3.24	73	2.2	-	71	-0.061	6.70	0.049
17	2.939	0.177	3.23	73	1.7	-	71	-0.060	6.79	0.048
18	3.116	0.177	3.24	73	1.9	-	71	-0.059	6.91	0.048
19	3.292	0.176	3.25	74	1.6	-	71	-0.059	7.00	0.047
20	3.467	0.175	3.25	74	1.6	99	71	-0.059	7.10	0.046
21	3.645	0.178	3.24	74	2.0	-	71	-0.059	7.20	0.051
22	3.823	0.178	3.26	74	2.1	-	71	-0.058	7.23	0.046
23	3.999	0.176	3.25	75	2.1	-	71	-0.059	7.28	0.048
24	4.174	0.175	3.25	75	1.8	-	71	-0.061	7.37	0.054
25	4.350	0.176	3.26	75	1.7	-	71	-0.058	7.50	0.052
26	4.530	0.180	3.26	75	2.0	-	71	-0.059	7.59	0.052
27	4.708	0.178	3.26	76	2.0	-	71	-0.060	7.70	0.052
28	4.885	0.177	3.27	76	2.0	-	71	-0.058	7.75	0.054
29	5.061	0.176	3.27	76	2.0	-	71	-0.057	7.74	0.052
30	5.238	0.177	3.27	77	1.8	100	71	-0.057	7.85	0.054
31	5.416	0.178	3.27	77	2.1	-	72	-0.057	7.99	0.062

BOX B TEST DATA - ASTM E2780 / ASTM E2515

Client: IHP
Model: I3000
Run #: 5

Job #: 23-229
Tracking #: 169
Technician: AK
Date: 12/18/2023

	Particulate Sampling Data							Flue Gas Data		
Elapsed Time (min)	Gas Meter (ft^3)	Sample Rate (cfm)	Orifice dH (in H_2O)	Meter Temp (°F)	Meter Vacuum (in Hg)	Pro. Rate (%)	Filter (°F)	Flue Draft (in H_2O)	CO_2 (%)	CO (%)
32	5.596	0.180	3.27	77	1.6	-	72	-0.055	8.15	0.062
33	5.773	0.177	3.27	77	2.0	-	72	-0.056	8.27	0.065
34	5.949	0.176	3.27	78	1.7	-	72	-0.057	8.57	0.069
35	6.127	0.178	3.27	78	1.6	-	72	-0.057	8.76	0.080
36	6.306	0.179	3.28	78	1.6	-	72	-0.055	8.99	0.075
37	6.484	0.178	3.27	78	1.7	-	72	-0.058	9.18	0.076
38	6.662	0.178	3.28	79	2.1	-	73	-0.058	9.66	0.082
39	6.839	0.177	3.27	79	1.7	-	73	-0.059	10.38	0.093
40	7.018	0.179	3.29	79	2.1	101	73	-0.062	11.12	0.131
41	7.197	0.179	3.28	80	1.7	-	73	-0.060	11.79	0.341
42	7.376	0.179	3.28	80	2.1	-	73	-0.060	11.96	0.566
43	7.554	0.178	3.28	80	2.2	-	73	-0.062	11.93	0.519
44	7.732	0.178	3.28	80	1.6	-	73	-0.061	11.83	0.900
45	7.911	0.179	3.29	81	1.8	-	73	-0.061	11.63	0.376
46	8.091	0.180	3.29	81	1.6	-	73	-0.062	11.39	0.131
47	8.270	0.179	3.29	81	1.7	-	73	-0.064	11.05	0.071
48	8.449	0.179	3.29	81	1.9	-	73	-0.062	11.19	0.071
49	8.627	0.178	3.30	82	1.7	-	74	-0.060	11.45	0.117
50	8.806	0.179	3.29	82	1.6	102	74	-0.061	11.28	0.134
51	8.986	0.180	3.28	82	1.7	-	74	-0.062	11.34	0.086
52	9.167	0.181	3.30	83	2.0	-	74	-0.061	11.37	0.097
53	9.347	0.180	3.30	83	1.9	-	74	-0.063	11.38	0.162
54	9.524	0.177	3.30	83	1.8	-	74	-0.063	11.50	0.155
55	9.703	0.179	3.28	83	2.0	-	74	-0.062	11.60	0.245
56	9.885	0.182	3.30	84	1.7	-	74	-0.062	11.74	0.277
57	10.066	0.181	3.30	84	2.1	-	74	-0.061	11.90	0.503
58	10.245	0.179	3.30	84	2.2	-	74	-0.063	11.92	0.890
59	10.423	0.178	3.29	84	1.6	-	74	-0.063	11.77	1.403
60	10.603	0.180	3.30	84	2.0	102	74	-0.062	11.68	1.768
61	10.785	0.182	3.31	85	2.1	-	74	-0.063	11.55	2.224
62	10.964	0.179	3.31	85	2.0	-	74	-0.065	11.62	1.962
63	11.145	0.181	3.31	85	2.1	-	74	-0.062	11.74	1.698

BOX B TEST DATA - ASTM E2780 / ASTM E2515

Client: IHP
Model: I3000
Run #: 5

Job #: 23-229
Tracking #: 169
Technician: AK
Date: 12/18/2023

	Particulate Sampling Data							Flue Gas Data		
Elapsed Time (min)	Gas Meter (ft^3)	Sample Rate (cfm)	Orifice dH (in H_2O)	Meter Temp (°F)	Meter Vacuum (in Hg)	Pro. Rate (%)	Filter (°F)	Flue Draft (in H_2O)	CO_2 (%)	CO (%)
64	11.325	0.180	3.31	85	2.0	-	74	-0.063	11.77	1.665
65	11.504	0.179	3.31	86	2.1	-	74	-0.061	11.86	1.568
66	11.684	0.180	3.31	86	1.8	-	74	-0.062	11.89	1.472
67	11.865	0.181	3.31	86	2.0	-	74	-0.062	11.92	1.525
68	12.047	0.182	3.31	86	1.9	-	75	-0.063	11.87	1.446
69	12.226	0.179	3.32	86	1.8	-	75	-0.060	11.85	1.415
70	12.404	0.178	3.31	86	2.2	101	75	-0.064	11.80	1.431
71	12.585	0.181	3.31	87	1.8	-	75	-0.062	11.79	1.520
72	12.767	0.182	3.32	87	1.9	-	75	-0.061	11.76	1.248
73	12.948	0.181	3.32	87	1.9	-	75	-0.062	11.57	1.144
74	13.129	0.181	3.31	87	1.7	-	75	-0.059	11.55	0.943
75	13.309	0.180	3.31	88	2.2	-	75	-0.060	11.51	0.883
76	13.488	0.179	3.32	88	2.2	-	75	-0.061	11.79	0.539
77	13.669	0.181	3.31	88	1.7	-	75	-0.057	11.63	0.390
78	13.851	0.182	3.32	88	1.8	-	75	-0.061	11.62	0.359
79	14.034	0.183	3.32	88	2.0	-	75	-0.058	11.51	0.238
80	14.214	0.180	3.32	88	1.6	101	75	-0.059	11.35	0.295
81	14.394	0.180	3.32	89	2.1	-	75	-0.059	11.21	0.224
82	14.574	0.180	3.32	89	2.1	-	75	-0.057	11.16	0.193
83	14.755	0.181	3.32	89	1.9	-	75	-0.059	11.12	0.307
84	14.937	0.182	3.32	89	2.1	-	75	-0.058	11.20	0.349
85	15.120	0.183	3.33	89	1.7	-	75	-0.059	11.17	0.412
86	15.300	0.180	3.33	89	2.2	-	75	-0.057	11.06	0.397
87	15.479	0.179	3.32	89	2.2	-	75	-0.058	11.18	0.445
88	15.661	0.182	3.33	89	2.0	-	75	-0.057	10.97	0.353
89	15.843	0.182	3.34	89	1.7	-	75	-0.059	10.84	0.132
90	16.025	0.182	3.33	90	1.8	100	75	-0.057	10.67	0.104
91	16.208	0.183	3.34	90	2.0	-	74	-0.058	10.84	0.153
92	16.389	0.181	3.34	90	1.9	-	74	-0.059	10.62	0.132
93	16.568	0.179	3.33	90	2.0	-	74	-0.059	10.42	0.119
94	16.751	0.183	3.34	90	2.2	-	74	-0.064	10.39	0.146
95	16.933	0.182	3.34	90	1.6	-	74	-0.058	9.65	0.089

BOX B TEST DATA - ASTM E2780 / ASTM E2515

Client: IHP
Model: I3000
Run #: 5

Job #: 23-229
Tracking #: 169
Technician: AK
Date: 12/18/2023

	Particulate Sampling Data							Flue Gas Data		
Elapsed Time (min)	Gas Meter (ft^3)	Sample Rate (cfm)	Orifice dH (in H_2O)	Meter Temp (°F)	Meter Vacuum (in Hg)	Pro. Rate (%)	Filter (°F)	Flue Draft (in H_2O)	CO_2 (%)	CO (%)
96	17.115	0.182	3.33	90	1.7	-	74	-0.057	9.41	0.082
97	17.298	0.183	3.34	90	2.1	-	75	-0.058	9.29	0.073
98	17.479	0.181	3.33	90	2.0	-	75	-0.057	9.16	0.073
99	17.659	0.180	3.33	90	2.1	-	74	-0.056	9.20	0.074
100	17.841	0.182	3.34	91	2.1	100	74	-0.057	9.21	0.072
101	18.023	0.182	3.34	91	1.9	-	74	-0.056	9.18	0.076
102	18.205	0.182	3.33	91	1.9	-	75	-0.056	9.47	0.087
103	18.389	0.184	3.34	91	2.0	-	75	-0.056	9.50	0.090
104	18.570	0.181	3.34	91	2.1	-	75	-0.056	9.59	0.093
105	18.749	0.179	3.33	91	1.9	-	75	-0.056	9.58	0.089
106	18.932	0.183	3.34	91	1.7	-	75	-0.055	9.57	0.086
107	19.114	0.182	3.34	91	2.1	-	75	-0.056	9.61	0.088
108	19.297	0.183	3.33	91	1.8	-	75	-0.056	9.66	0.088
109	19.480	0.183	3.34	91	1.6	-	75	-0.057	9.83	0.097
110	19.662	0.182	3.34	91	1.9	101	75	-0.056	9.86	0.084
111	19.841	0.179	3.32	91	2.0	-	75	-0.060	9.91	0.091
112	20.024	0.183	3.33	91	1.8	-	75	-0.055	9.86	0.096
113	20.206	0.182	3.34	91	1.7	-	75	-0.056	9.79	0.089
114	20.388	0.182	3.34	92	2.2	-	75	-0.056	9.87	0.090
115	20.572	0.184	3.33	92	1.8	-	75	-0.055	9.84	0.093
116	20.753	0.181	3.34	92	1.6	-	75	-0.056	9.84	0.091
117	20.934	0.181	3.34	92	2.1	-	75	-0.056	9.88	0.094
118	21.116	0.182	3.34	92	2.0	-	75	-0.056	9.74	0.089
119	21.299	0.183	3.34	92	2.1	-	75	-0.057	9.80	0.094
120	21.482	0.183	3.34	92	1.8	101	76	-0.053	9.96	0.101
121	21.666	0.184	3.34	92	1.7	-	76	-0.057	9.95	0.086
122	21.848	0.182	3.34	92	1.7	-	76	-0.056	10.01	0.110
123	22.029	0.181	3.34	92	1.8	-	76	-0.057	10.10	0.120
124	22.211	0.182	3.35	92	1.8	-	76	-0.058	9.99	0.101
125	22.392	0.181	3.34	93	1.9	-	76	-0.058	9.93	0.117
126	22.576	0.184	3.35	93	2.1	-	76	-0.057	9.95	0.123
127	22.760	0.184	3.35	93	2.1	-	76	-0.057	9.93	0.122

BOX B TEST DATA - ASTM E2780 / ASTM E2515

Client: IHP
Model: I3000
Run #: 5

Job #: 23-229
Tracking #: 169
Technician: AK
Date: 12/18/2023

	Particulate Sampling Data							Flue Gas Data		
Elapsed Time (min)	Gas Meter (ft^3)	Sample Rate (cfm)	Orifice dH (in H_2O)	Meter Temp (°F)	Meter Vacuum (in Hg)	Pro. Rate (%)	Filter (°F)	Flue Draft (in H_2O)	CO_2 (%)	CO (%)
128	22.942	0.182	3.35	93	1.9	-	76	-0.057	9.88	0.126
129	23.124	0.182	3.34	93	1.6	-	76	-0.055	9.96	0.131
130	23.305	0.181	3.34	93	1.6	101	76	-0.055	9.91	0.128
131	23.487	0.182	3.34	93	2.1	-	76	-0.058	9.93	0.130
132	23.672	0.185	3.35	93	1.8	-	76	-0.056	9.69	0.106
133	23.855	0.183	3.34	93	2.2	-	76	-0.058	9.82	0.127
134	24.038	0.183	3.34	93	1.7	-	76	-0.058	9.91	0.129
135	24.220	0.182	3.35	93	1.9	-	76	-0.057	10.00	0.123
136	24.400	0.180	3.34	94	1.9	-	76	-0.057	9.99	0.133
137	24.583	0.183	3.34	94	1.6	-	76	-0.057	10.14	0.138
138	24.766	0.183	3.35	94	2.1	-	76	-0.066	10.33	0.143
139	24.949	0.183	3.34	94	1.7	-	76	-0.058	10.23	0.145
140	25.134	0.185	3.34	94	1.7	101	76	-0.058	10.74	0.196
141	25.316	0.182	3.34	94	2.2	-	76	-0.057	10.42	0.146
142	25.497	0.181	3.34	94	1.8	-	76	-0.058	10.36	0.148
143	25.680	0.183	3.35	94	2.2	-	76	-0.057	10.68	0.209
144	25.862	0.182	3.34	94	2.2	-	76	-0.058	10.95	0.209
145	26.046	0.184	3.35	94	1.9	-	76	-0.058	11.01	0.224
146	26.229	0.183	3.35	94	2.1	-	76	-0.058	10.98	0.229
147	26.412	0.183	3.34	94	2.1	-	76	-0.056	10.93	0.235
148	26.595	0.183	3.34	94	1.9	-	76	-0.056	10.85	0.238
149	26.775	0.180	3.35	94	1.7	-	76	-0.065	10.62	0.141
150	26.959	0.184	3.34	94	1.6	101	76	-0.056	10.23	0.094
151	27.143	0.184	3.35	94	2.0	-	76	-0.064	10.17	0.090
152	27.326	0.183	3.34	94	1.7	-	76	-0.056	10.10	0.080
153	27.510	0.184	3.35	95	1.6	-	76	-0.056	10.05	0.080
154	27.692	0.182	3.36	95	2.1	-	76	-0.056	9.89	0.079
155	27.873	0.181	3.35	95	2.1	-	76	-0.057	9.93	0.074
156	28.056	0.183	3.34	95	1.7	-	76	-0.056	9.79	0.073
157	28.240	0.184	3.35	95	1.9	-	76	-0.057	9.61	0.073
158	28.424	0.184	3.35	95	1.8	-	76	-0.056	9.40	0.076
159	28.608	0.184	3.35	95	1.7	-	76	-0.054	9.17	0.077

BOX B TEST DATA - ASTM E2780 / ASTM E2515

Client: IHP
Model: I3000
Run #: 5

Job #: 23-229
Tracking #: 169
Technician: AK
Date: 12/18/2023

	Particulate Sampling Data							Flue Gas Data		
Elapsed Time (min)	Gas Meter (ft^3)	Sample Rate (cfm)	Orifice dH (in H_2O)	Meter Temp (°F)	Meter Vacuum (in Hg)	Pro. Rate (%)	Filter (°F)	Flue Draft (in H_2O)	CO_2 (%)	CO (%)
160	28.790	0.182	3.34	95	1.7	101	76	-0.056	9.28	0.077
161	28.973	0.183	3.34	95	2.1	-	76	-0.055	9.23	0.078
162	29.155	0.182	3.35	95	1.7	-	76	-0.056	9.20	0.087
163	29.338	0.183	3.34	95	1.9	-	76	-0.056	9.20	0.078
164	29.523	0.185	3.35	95	2.1	-	76	-0.056	9.20	0.083
165	29.705	0.182	3.35	95	1.8	-	76	-0.056	9.18	0.090
166	29.890	0.185	3.35	95	1.8	-	76	-0.055	9.14	0.084
167	30.072	0.182	3.35	95	1.7	-	75	-0.056	9.14	0.081
168	30.253	0.181	3.35	95	1.6	-	75	-0.057	9.13	0.082
169	30.437	0.184	3.34	95	1.9	-	75	-0.055	9.17	0.081
170	30.620	0.183	3.35	95	2.1	100	75	-0.056	9.13	0.080
171	30.804	0.184	3.34	95	1.8	-	76	-0.052	9.15	0.085
172	30.988	0.184	3.36	95	2.1	-	75	-0.056	9.21	0.084
173	31.171	0.183	3.35	95	2.1	-	76	-0.056	9.19	0.075
174	31.354	0.183	3.35	95	1.9	-	75	-0.055	9.37	0.086
175	31.535	0.181	3.35	95	2.2	-	75	-0.056	9.35	0.103
176	31.719	0.184	3.35	95	1.7	-	75	-0.053	9.31	0.087
177	31.903	0.184	3.35	95	1.7	-	75	-0.055	9.00	0.084
178	32.086	0.183	3.35	95	2.1	-	75	-0.056	8.76	0.079
179	32.271	0.185	3.35	95	1.6	-	75	-0.053	8.69	0.077
180	32.454	0.183	3.35	95	2.1	100	75	-0.054	8.77	0.080
181	32.636	0.182	3.35	95	2.1	-	75	-0.053	8.63	0.079
182	32.819	0.183	3.35	95	1.9	-	75	-0.053	8.46	0.076
183	33.001	0.182	3.34	95	2.0	-	75	-0.054	8.27	0.072
184	33.186	0.185	3.35	95	1.8	-	75	-0.051	8.08	0.073
185	33.370	0.184	3.35	95	1.9	-	75	-0.052	7.83	0.069
186	33.554	0.184	3.35	95	2.2	-	75	-0.053	7.94	0.065
187	33.737	0.183	3.35	95	2.0	-	75	-0.053	7.92	0.071
188	33.918	0.181	3.35	95	1.8	-	75	-0.051	7.86	0.063
189	34.102	0.184	3.35	95	1.7	-	75	-0.051	7.72	0.075
190	34.285	0.183	3.35	95	2.1	99	75	-0.050	7.69	0.077
191	34.470	0.185	3.35	95	1.7	-	75	-0.049	7.73	0.072

BOX B TEST DATA - ASTM E2780 / ASTM E2515

Client: IHP
Model: I3000
Run #: 5

Job #: 23-229
Tracking #: 169
Technician: AK
Date: 12/18/2023

	Particulate Sampling Data							Flue Gas Data		
Elapsed Time (min)	Gas Meter (ft^3)	Sample Rate (cfm)	Orifice dH (in H_2O)	Meter Temp (°F)	Meter Vacuum (in Hg)	Pro. Rate (%)	Filter (°F)	Flue Draft (in H_2O)	CO_2 (%)	CO (%)
192	34.655	0.185	3.35	95	2.2	-	75	-0.053	7.67	0.076
193	34.837	0.182	3.35	95	1.7	-	75	-0.051	7.64	0.069
194	35.020	0.183	3.35	95	2.0	-	75	-0.050	7.54	0.068
195	35.202	0.182	3.35	95	1.6	-	75	-0.051	7.46	0.075
196	35.386	0.184	3.35	95	1.6	-	74	-0.050	7.41	0.071
197	35.571	0.185	3.36	95	1.6	-	74	-0.049	7.41	0.070
198	35.754	0.183	3.35	95	1.8	-	74	-0.051	7.36	0.073
199	35.939	0.185	3.35	95	2.2	-	74	-0.049	7.35	0.066
200	36.122	0.183	3.36	95	2.0	100	74	-0.050	7.41	0.071
201	36.304	0.182	3.35	95	2.1	-	74	-0.049	7.37	0.067
202	36.487	0.183	3.36	95	1.8	-	74	-0.052	7.35	0.065
203	36.670	0.183	3.35	95	1.7	-	74	-0.050	7.33	0.069
204	36.855	0.185	3.35	95	2.1	-	74	-0.048	7.30	0.065
205	37.039	0.184	3.36	95	2.1	-	74	-0.046	7.25	0.064
206	37.223	0.184	3.35	95	1.6	-	74	-0.050	7.17	0.064
207	37.407	0.184	3.36	95	1.7	-	74	-0.048	7.18	0.065
208	37.588	0.181	3.35	95	2.1	-	74	-0.048	7.16	0.061
209	37.772	0.184	3.35	95	1.8	-	74	-0.047	7.09	0.067
210	37.955	0.183	3.36	95	2.1	100	74	-0.048	7.13	0.065
211	38.140	0.185	3.35	95	2.0	-	74	-0.046	7.11	0.066
212	38.324	0.184	3.36	95	2.2	-	74	-0.047	7.12	0.061
213	38.507	0.183	3.36	95	1.8	-	74	-0.048	7.10	0.063
214	38.691	0.184	3.36	95	2.1	-	74	-0.045	7.07	0.062
215	38.873	0.182	3.35	95	1.8	-	74	-0.048	7.09	0.055
216	39.057	0.184	3.36	95	1.8	-	74	-0.048	7.06	0.054
217	39.240	0.183	3.35	95	1.6	-	74	-0.047	7.06	0.056
218	39.425	0.185	3.36	95	2.0	-	74	-0.045	7.03	0.060
219	39.610	0.185	3.35	95	1.9	-	74	-0.045	6.97	0.053
220	39.793	0.183	3.36	95	2.0	100	74	-0.044	6.88	0.053
221	39.976	0.183	3.36	95	2.1	-	74	-0.046	6.89	0.064
222	40.158	0.182	3.35	96	1.7	-	74	-0.046	7.05	0.057
223	40.341	0.183	3.36	95	2.0	-	73	-0.045	7.06	0.060

BOX B TEST DATA - ASTM E2780 / ASTM E2515

Client: IHP
Model: I3000
Run #: 5

Job #: 23-229
Tracking #: 169
Technician: AK
Date: 12/18/2023

	Particulate Sampling Data							Flue Gas Data		
Elapsed Time (min)	Gas Meter (ft^3)	Sample Rate (cfm)	Orifice dH (in H_2O)	Meter Temp (°F)	Meter Vacuum (in Hg)	Pro. Rate (%)	Filter (°F)	Flue Draft (in H_2O)	CO_2 (%)	CO (%)
224	40.527	0.186	3.36	95	1.8	-	73	-0.044	7.04	0.060
225	40.710	0.183	3.35	95	1.6	-	73	-0.044	7.04	0.063
226	40.895	0.185	3.35	95	1.8	-	73	-0.043	7.07	0.058
227	41.077	0.182	3.36	95	2.0	-	73	-0.043	7.01	0.054
228	41.260	0.183	3.35	95	1.6	-	73	-0.044	7.01	0.056
229	41.444	0.184	3.35	95	1.6	-	73	-0.043	7.01	0.051
230	41.626	0.182	3.35	95	2.1	100	73	-0.044	6.99	0.055
231	41.812	0.186	3.35	95	2.1	-	73	-0.045	6.96	0.053
232	41.996	0.184	3.36	95	1.6	-	73	-0.047	6.95	0.054
233	42.180	0.184	3.36	95	2.1	-	73	-0.043	6.95	0.053
234	42.363	0.183	3.36	95	1.6	-	73	-0.044	6.95	0.055
235	42.544	0.181	3.35	95	2.1	-	73	-0.043	6.93	0.051
236	42.728	0.184	3.35	95	1.8	-	73	-0.044	6.90	0.051
237	42.912	0.184	3.35	95	1.9	-	73	-0.045	6.89	0.053
238	43.097	0.185	3.35	95	2.1	-	73	-0.043	7.45	0.051
239	43.281	0.184	3.36	95	1.6	-	73	-0.044	7.58	0.039
240	43.465	0.184	3.35	95	1.7	100	73	-0.045	7.50	0.039
241	43.649	0.184	3.35	95	2.0	-	73	-0.044	7.48	0.039
242	43.830	0.181	3.36	95	2.1	-	73	-0.044	7.45	0.040
243	44.014	0.184	3.35	95	1.6	-	73	-0.043	7.42	0.042
244	44.198	0.184	3.36	95	1.6	-	73	-0.044	7.49	0.035
245	44.382	0.184	3.36	95	2.1	-	73	-0.043	7.47	0.036
246	44.568	0.186	3.35	95	1.9	-	73	-0.042	7.45	0.038
247	44.750	0.182	3.36	95	2.0	-	73	-0.044	7.45	0.037
248	44.934	0.184	3.36	95	1.8	-	73	-0.042	7.47	0.033
249	45.115	0.181	3.36	95	1.6	-	73	-0.042	7.41	0.037
250	45.299	0.184	3.36	95	1.8	100	73	-0.041	7.45	0.037
251	45.484	0.185	3.36	95	2.1	-	73	-0.040	7.40	0.037
252	45.668	0.184	3.36	95	2.1	-	73	-0.039	7.47	0.034
253	45.853	0.185	3.35	95	1.7	-	73	-0.043	7.44	0.035
254	46.036	0.183	3.36	95	1.7	-	73	-0.044	7.45	0.040
255	46.219	0.183	3.35	95	1.7	-	73	-0.041	7.44	0.035

BOX B TEST DATA - ASTM E2780 / ASTM E2515

Client: IHP
Model: I3000
Run #: 5

Job #: 23-229
Tracking #: 169
Technician: AK
Date: 12/18/2023

	Particulate Sampling Data							Flue Gas Data		
Elapsed Time (min)	Gas Meter (ft^3)	Sample Rate (cfm)	Orifice dH (in H_2O)	Meter Temp (°F)	Meter Vacuum (in Hg)	Pro. Rate (%)	Filter (°F)	Flue Draft (in H_2O)	CO_2 (%)	CO (%)
256	46.402	0.183	3.36	95	1.9	-	73	-0.041	7.38	0.038
257	46.585	0.183	3.35	95	2.0	-	73	-0.039	7.49	0.035
258	46.770	0.185	3.35	95	1.6	-	73	-0.041	7.46	0.037
259	46.954	0.184	3.36	96	1.6	-	73	-0.041	7.43	0.036
260	47.139	0.185	3.36	95	2.0	100	73	-0.042	7.41	0.033
261	47.322	0.183	3.35	95	2.1	-	73	-0.042	7.50	0.028
262	47.504	0.182	3.36	95	1.6	-	73	-0.041	7.41	0.034
263	47.688	0.184	3.36	95	2.1	-	73	-0.041	7.39	0.037
264	47.871	0.183	3.36	95	1.7	-	73	-0.040	7.30	0.031
265	48.056	0.185	3.35	95	1.6	-	73	-0.041	7.35	0.032
266	48.240	0.184	3.35	95	2.1	-	73	-0.040	7.32	0.035
267	48.425	0.185	3.35	95	1.7	-	73	-0.041	7.27	0.036
268	48.609	0.184	3.36	95	1.7	-	73	-0.042	7.19	0.038
269	48.789	0.180	3.35	95	2.1	-	73	-0.040	7.22	0.041
270	48.974	0.185	3.35	95	1.9	99	73	-0.043	7.23	0.039
271	49.158	0.184	3.36	95	1.9	-	73	-0.041	7.19	0.032
272	49.343	0.185	3.36	95	1.7	-	73	-0.041	7.21	0.036
273	49.527	0.184	3.36	95	1.8	-	73	-0.042	7.22	0.035
274	49.710	0.183	3.36	95	2.1	-	73	-0.040	7.27	0.037
275	49.894	0.184	3.35	95	1.8	-	73	-0.042	7.21	0.037
276	50.076	0.182	3.35	95	1.8	-	73	-0.040	7.22	0.037
277	50.260	0.184	3.35	95	1.9	-	73	-0.042	7.17	0.036
278	50.444	0.184	3.35	95	1.7	-	73	-0.041	7.20	0.035
279	50.629	0.185	3.35	96	1.6	-	73	-0.040	7.19	0.034
280	50.814	0.185	3.36	96	1.9	99	73	-0.040	7.19	0.037
281	50.996	0.182	3.35	95	1.7	-	73	-0.040	7.16	0.036
282	51.180	0.184	3.36	96	1.9	-	73	-0.039	7.11	0.033
283	51.362	0.182	3.35	95	2.0	-	73	-0.040	7.09	0.033
284	51.546	0.184	3.35	95	1.8	-	73	-0.040	7.01	0.034
285	51.731	0.185	3.35	95	2.0	-	73	-0.043	7.04	0.035
286	51.914	0.183	3.35	95	1.8	-	73	-0.040	7.03	0.032
287	52.100	0.186	3.35	95	1.8	-	73	-0.041	7.07	0.037

BOX B TEST DATA - ASTM E2780 / ASTM E2515

Client: IHP
Model: I3000
Run #: 5

Job #: 23-229
Tracking #: 169
Technician: AK
Date: 12/18/2023

	Particulate Sampling Data							Flue Gas Data		
Elapsed Time (min)	Gas Meter (ft^3)	Sample Rate (cfm)	Orifice dH (in H_2O)	Meter Temp (°F)	Meter Vacuum (in Hg)	Pro. Rate (%)	Filter (°F)	Flue Draft (in H_2O)	CO_2 (%)	CO (%)
288	52.283	0.183	3.35	95	1.8	-	73	-0.041	7.09	0.035
289	52.465	0.182	3.35	95	1.6	-	73	-0.041	7.11	0.036
290	52.648	0.183	3.36	95	1.9	100	73	-0.040	7.10	0.032
291	52.831	0.183	3.35	95	1.7	-	73	-0.039	7.09	0.045
292	53.016	0.185	3.35	95	2.0	-	73	-0.038	7.07	0.045
293	53.200	0.184	3.35	95	1.9	-	72	-0.041	7.09	0.042
294	53.385	0.185	3.35	95	1.7	-	72	-0.040	7.11	0.045
295	53.568	0.183	3.35	95	2.0	-	72	-0.042	7.13	0.042
296	53.750	0.182	3.36	95	2.0	-	73	-0.041	7.02	0.041
297	53.934	0.184	3.36	95	2.2	-	73	-0.038	7.08	0.041
298	54.117	0.183	3.35	95	1.9	-	73	-0.041	6.98	0.039
299	54.302	0.185	3.35	95	2.2	-	73	-0.040	7.03	0.043
300	54.486	0.184	3.35	95	2.1	101	73	-0.040	7.01	0.041
301	54.670	0.184	3.35	95	1.6	-	72	-0.039	6.94	0.042
302	54.854	0.184	3.36	95	1.7	-	72	-0.039	6.95	0.046
303	55.035	0.181	3.36	95	2.1	-	72	-0.039	6.99	0.040
304	55.219	0.184	3.34	95	2.2	-	73	-0.040	6.97	0.045
305	55.403	0.184	3.35	95	1.7	-	73	-0.040	6.94	0.043
306	55.588	0.185	3.35	95	2.1	-	73	-0.037	6.90	0.047
307	55.772	0.184	3.36	95	1.7	-	72	-0.040	6.95	0.046
308	55.955	0.183	3.35	95	1.7	-	72	-0.042	7.02	0.043
309	56.139	0.184	3.35	95	1.7	-	72	-0.041	6.96	0.038
310	56.321	0.182	3.35	95	1.7	100	72	-0.039	6.95	0.040
311	56.505	0.184	3.36	95	2.0	-	72	-0.040	6.98	0.049
312	56.689	0.184	3.35	95	2.0	-	72	-0.040	6.98	0.049
313	56.873	0.184	3.35	95	1.6	-	72	-0.040	6.89	0.042
314	57.059	0.186	3.36	95	2.0	-	72	-0.039	6.82	0.047
315	57.241	0.182	3.36	95	2.1	-	72	-0.040	6.84	0.046
316	57.425	0.184	3.36	95	1.9	-	72	-0.038	6.85	0.045
317	57.606	0.181	3.35	95	1.6	-	72	-0.039	6.87	0.045
318	57.791	0.185	3.35	95	2.2	-	72	-0.040	6.86	0.045
319	57.975	0.184	3.35	95	2.2	-	72	-0.040	6.83	0.045

BOX B TEST DATA - ASTM E2780 / ASTM E2515

Client: IHP
Model: I3000
Run #: 5

Job #: 23-229
Tracking #: 169
Technician: AK
Date: 12/18/2023

	Particulate Sampling Data							Flue Gas Data		
Elapsed Time (min)	Gas Meter (ft^3)	Sample Rate (cfm)	Orifice dH (in H_2O)	Meter Temp (°F)	Meter Vacuum (in Hg)	Pro. Rate (%)	Filter (°F)	Flue Draft (in H_2O)	CO_2 (%)	CO (%)
320	58.159	0.184	3.35	95	2.0	100	72	-0.036	6.89	0.049
321	58.344	0.185	3.35	95	1.8	-	73	-0.040	6.91	0.041
322	58.527	0.183	3.36	95	2.1	-	73	-0.038	6.84	0.049
323	58.710	0.183	3.35	95	2.1	-	72	-0.039	6.82	0.042
324	58.893	0.183	3.35	95	2.0	-	72	-0.039	6.79	0.043
325	59.075	0.182	3.35	95	2.0	-	72	-0.038	6.78	0.044
326	59.261	0.186	3.35	95	1.7	-	72	-0.039	6.85	0.042
327	59.445	0.184	3.35	95	2.1	-	72	-0.038	6.80	0.045
328	59.630	0.185	3.35	95	1.6	-	73	-0.037	6.80	0.047
329	59.813	0.183	3.35	95	1.6	-	72	-0.038	6.75	0.047
330	59.994	0.181	3.35	95	2.0	100	72	-0.039	6.74	0.049
331	60.179	0.185	3.35	95	2.2	-	72	-0.040	6.71	0.051
332	60.362	0.183	3.36	95	2.0	-	72	-0.040	6.69	0.046
333	60.547	0.185	3.35	95	2.0	-	72	-0.037	6.70	0.045
334	60.731	0.184	3.35	95	1.8	-	72	-0.037	6.65	0.048
335	60.916	0.185	3.35	95	1.9	-	72	-0.039	6.59	0.053
336	61.099	0.183	3.35	95	1.6	-	72	-0.039	6.57	0.049
337	61.280	0.181	3.35	95	1.8	-	72	-0.039	6.59	0.049
338	61.464	0.184	3.34	95	1.7	-	72	-0.038	5.29	0.040
339	61.648	0.184	3.35	95	2.1	-	72	-0.038	6.44	0.049
340	61.833	0.185	3.35	95	1.8	100	72	-0.037	6.42	0.049
341	62.018	0.185	3.36	95	1.8	-	72	-0.038	6.49	0.050
342	62.200	0.182	3.35	95	2.1	-	72	-0.038	6.63	0.056
343	62.384	0.184	3.35	95	2.1	-	72	-0.038	6.63	0.053
344	62.566	0.182	3.36	95	1.6	-	72	-0.038	6.62	0.057
345	62.750	0.184	3.35	95	2.0	-	72	-0.039	6.65	0.059
346	62.934	0.184	3.35	95	1.7	-	72	-0.036	6.58	0.056
347	63.118	0.184	3.35	95	1.6	-	72	-0.038	6.41	0.051
348	63.303	0.185	3.35	95	1.7	-	72	-0.039	6.31	0.045
349	63.486	0.183	3.35	95	2.1	-	72	-0.037	6.24	0.056
350	63.670	0.184	3.35	95	2.1	99	72	-0.037	6.27	0.057
351	63.852	0.182	3.35	95	1.7	-	72	-0.039	6.25	0.056

BOX B TEST DATA - ASTM E2780 / ASTM E2515

Client: IHP
Model: I3000
Run #: 5

Job #: 23-229
Tracking #: 169
Technician: AK
Date: 12/18/2023

	Particulate Sampling Data							Flue Gas Data		
Elapsed Time (min)	Gas Meter (ft^3)	Sample Rate (cfm)	Orifice dH (in H_2O)	Meter Temp (°F)	Meter Vacuum (in Hg)	Pro. Rate (%)	Filter (°F)	Flue Draft (in H_2O)	CO_2 (%)	CO (%)
352	64.035	0.183	3.35	95	2.1	-	72	-0.038	6.21	0.056
353	64.221	0.186	3.35	95	1.8	-	72	-0.036	6.23	0.053
354	64.404	0.183	3.35	95	2.1	-	72	-0.038	6.25	0.055
355	64.589	0.185	3.35	95	2.0	-	72	-0.038	6.21	0.057
356	64.772	0.183	3.35	95	1.7	-	72	-0.038	6.18	0.064
357	64.954	0.182	3.35	95	2.0	-	72	-0.038	6.18	0.063
358	65.138	0.184	3.35	95	2.1	-	72	-0.038	6.20	0.058
359	65.320	0.182	3.35	95	2.0	-	72	-0.037	6.17	0.054
360	65.506	0.186	3.35	95	1.8	99	72	-0.037	6.15	0.049
361	65.690	0.184	3.36	95	1.7	-	72	-0.036	6.14	0.049
362	65.874	0.184	3.35	95	2.0	-	72	-0.039	6.06	0.053
363	66.058	0.184	3.36	95	1.8	-	72	-0.038	6.05	0.052
364	66.239	0.181	3.35	95	1.6	-	72	-0.037	5.96	0.052
365	66.423	0.184	3.35	95	2.1	-	72	-0.036	6.02	0.054
366	66.607	0.184	3.35	95	2.1	-	72	-0.038	5.97	0.055
367	66.792	0.185	3.35	95	2.0	-	72	-0.038	5.96	0.051
368	66.976	0.184	3.35	95	2.0	-	72	-0.036	5.91	0.051
369	67.159	0.183	3.35	95	1.8	-	72	-0.034	5.88	0.056
370	67.344	0.185	3.35	95	1.7	100	72	-0.037	5.88	0.059
371	67.525	0.181	3.35	95	1.6	-	72	-0.036	5.84	0.055
372	67.709	0.184	3.35	95	1.7	-	72	-0.038	5.84	0.057
373	67.892	0.183	3.35	95	1.6	-	72	-0.036	5.82	0.055
374	68.077	0.185	3.35	95	2.2	-	72	-0.039	5.86	0.060
375	68.262	0.185	3.36	95	2.1	-	72	-0.034	5.90	0.066
376	68.445	0.183	3.34	95	1.9	-	72	-0.036	5.86	0.067
377	68.628	0.183	3.35	95	2.0	-	72	-0.035	5.80	0.067
378	68.810	0.182	3.35	95	2.1	-	72	-0.036	5.74	0.071
379	68.994	0.184	3.34	95	1.9	-	72	-0.036	5.74	0.081
380	69.179	0.185	3.35	95	1.6	100	72	-0.035	5.76	0.074
381	69.362	0.183	3.34	95	1.6	-	72	-0.035	5.75	0.080
382	69.548	0.186	3.35	95	1.6	-	72	-0.034	5.77	0.083
383	69.731	0.183	3.35	95	1.8	-	72	-0.037	5.78	0.078

BOX B TEST DATA - ASTM E2780 / ASTM E2515

Client: IHP
Model: I3000
Run #: 5

Job #: 23-229
Tracking #: 169
Technician: AK
Date: 12/18/2023

	Particulate Sampling Data							Flue Gas Data		
Elapsed Time (min)	Gas Meter (ft^3)	Sample Rate (cfm)	Orifice dH (in H_2O)	Meter Temp (°F)	Meter Vacuum (in Hg)	Pro. Rate (%)	Filter (°F)	Flue Draft (in H_2O)	CO_2 (%)	CO (%)
384	69.913	0.182	3.34	95	1.7	-	72	-0.035	5.71	0.077
385	70.096	0.183	3.35	95	1.6	-	72	-0.036	5.66	0.080
386	70.279	0.183	3.35	95	2.1	-	72	-0.039	5.61	0.087
387	70.465	0.186	3.35	95	2.0	-	72	-0.036	5.62	0.097
388	70.649	0.184	3.36	95	2.0	-	72	-0.034	5.60	0.094
389	70.833	0.184	3.35	95	1.9	-	72	-0.035	5.55	0.102
390	71.016	0.183	3.35	95	1.9	101	72	-0.037	5.55	0.107
391	71.198	0.182	3.35	95	2.1	-	72	-0.035	5.39	0.107
392	71.383	0.185	3.35	95	2.1	-	72	-0.036	5.35	0.122
393	71.565	0.182	3.35	95	2.1	-	72	-0.036	5.37	0.133
394	71.750	0.185	3.34	95	1.6	-	72	-0.034	5.33	0.131
395	71.934	0.184	3.34	95	1.6	-	72	-0.036	5.38	0.131
396	72.119	0.185	3.35	95	2.2	-	72	-0.035	5.35	0.129
397	72.302	0.183	3.35	95	1.6	-	72	-0.036	5.37	0.131
398	72.483	0.181	3.34	95	1.9	-	72	-0.036	5.37	0.133
399	72.667	0.184	3.34	95	1.8	-	72	-0.033	5.36	0.136
400	72.851	0.184	3.35	95	1.6	100	72	-0.034	5.38	0.136
401	73.036	0.185	3.34	95	2.0	-	72	-0.035	5.40	0.136
402	73.221	0.185	3.35	95	2.1	-	72	-0.035	5.42	0.136
403	73.403	0.182	3.34	95	1.7	-	72	-0.037	5.41	0.140
404	73.587	0.184	3.35	95	2.1	-	72	-0.036	5.46	0.140
405	73.769	0.182	3.35	95	1.9	-	72	-0.036	5.49	0.147
406	73.953	0.184	3.35	95	2.0	-	72	-0.035	5.53	0.145
407	74.137	0.184	3.35	95	2.1	-	72	-0.035	5.56	0.147
408	74.321	0.184	3.35	95	1.8	-	72	-0.033	5.61	0.148
409	74.507	0.186	3.35	95	1.6	-	72	-0.034	5.63	0.149
410	74.689	0.182	3.35	95	2.1	99	72	-0.034	5.66	0.145
411	74.873	0.184	3.35	95	1.6	-	72	-0.036	5.61	0.153
412	75.054	0.181	3.35	95	1.8	-	72	-0.033	5.63	0.159
413	75.238	0.184	3.35	95	2.0	-	72	-0.033	5.67	0.154
414	75.423	0.185	3.35	95	1.7	-	72	-0.036	5.71	0.159
415	75.607	0.184	3.35	95	1.7	-	72	-0.034	5.69	0.155

BOX B TEST DATA - ASTM E2780 / ASTM E2515

Client: IHP
Model: I3000
Run #: 5

Job #: 23-229
Tracking #: 169
Technician: AK
Date: 12/18/2023

	Particulate Sampling Data							Flue Gas Data		
Elapsed Time (min)	Gas Meter (ft^3)	Sample Rate (cfm)	Orifice dH (in H_2O)	Meter Temp (°F)	Meter Vacuum (in Hg)	Pro. Rate (%)	Filter (°F)	Flue Draft (in H_2O)	CO_2 (%)	CO (%)
416	75.792	0.185	3.35	95	1.6	-	72	-0.033	5.77	0.160
417	75.974	0.182	3.35	95	2.1	-	72	-0.033	5.75	0.162
418	76.157	0.183	3.35	95	1.6	-	72	-0.036	5.74	0.160
419	76.341	0.184	3.35	95	1.7	-	72	-0.036	5.81	0.164
420	76.523	0.182	3.35	95	1.8	99	72	-0.036	5.87	0.166
421	76.709	0.186	3.34	95	1.8	-	72	-0.034	5.86	0.167
422	76.893	0.184	3.35	95	1.6	-	72	-0.035	5.86	0.165
423	77.077	0.184	3.34	95	1.9	-	72	-0.036	5.86	0.168
424	77.261	0.184	3.36	95	1.6	-	72	-0.035	5.86	0.165
425	77.442	0.181	3.35	95	2.1	-	72	-0.035	5.90	0.166
426	77.626	0.184	3.35	95	1.8	-	72	-0.034	5.84	0.163
427	77.810	0.184	3.35	95	1.7	-	72	-0.032	5.85	0.165
428	77.995	0.185	3.35	95	2.1	-	72	-0.035	5.83	0.166
429	78.179	0.184	3.34	95	1.7	-	72	-0.035	5.83	0.165
430	78.362	0.183	3.35	95	1.7	99	72	-0.037	5.84	0.163
431	78.543	0.181	3.34	95	1.9	-	72	-0.034	5.70	0.164
432	78.728	0.185	3.35	95	2.1	-	72	-0.036	5.78	0.162
433	78.912	0.184	3.35	95	2.0	-	72	-0.034	5.81	0.168
434	79.095	0.183	3.34	95	1.6	-	72	-0.035	5.88	0.170
435	79.280	0.185	3.35	95	1.7	-	72	-0.033	5.92	0.175
436	79.465	0.185	3.35	95	2.0	-	72	-0.035	5.92	0.171
437	79.647	0.182	3.34	95	2.1	-	72	-0.034	5.91	0.171
438	79.831	0.184	3.34	95	1.6	-	72	-0.033	5.92	0.174
439	80.013	0.182	3.35	95	1.9	-	72	-0.034	5.74	0.165
440	80.197	0.184	3.35	95	1.8	100	72	-0.033	6.12	0.162
441	80.382	0.185	3.35	95	1.8	-	72	-0.034	6.56	0.168
442	80.565	0.183	3.34	95	1.8	-	72	-0.033	6.75	0.172
443	80.750	0.185	3.35	95	1.6	-	72	-0.034	6.71	0.170
444	80.934	0.184	3.35	95	2.1	-	72	-0.033	6.66	0.166
445	81.116	0.182	3.35	95	1.9	-	72	-0.035	6.56	0.157
446	81.299	0.183	3.35	95	1.6	-	72	-0.035	6.58	0.146
447	81.482	0.183	3.35	95	2.1	-	72	-0.033	6.65	0.099

BOX B TEST DATA - ASTM E2780 / ASTM E2515

Client: IHP
Model: I3000
Run #: 5

Job #: 23-229
Tracking #: 169
Technician: AK
Date: 12/18/2023

	Particulate Sampling Data							Flue Gas Data		
Elapsed Time (min)	Gas Meter (ft^3)	Sample Rate (cfm)	Orifice dH (in H_2O)	Meter Temp (°F)	Meter Vacuum (in Hg)	Pro. Rate (%)	Filter (°F)	Flue Draft (in H_2O)	CO_2 (%)	CO (%)
448	81.667	0.185	3.34	95	1.6	100	72	-0.034	6.69	0.095
Avg/Tot	81.669	0.182	3.33	91.7	1.9	100	73.3	-0.047	7.89	0.152

BOX C TEST DATA - ASTM E2780 / ASTM E2515

Client: IHP
Model: I3000
Run #: 5

Job #: 23-229
Tracking #: 169
Technician: AK
Date: 12/18/2023

	Particulate Sampling Data						
Elapsed Time (min)	Gas Meter (ft^3)	Sample Rate (cfm)	Orifice dH (in H_2O)	Meter Temp (°F)	Meter Vacuum (in Hg)	Pro. Rate (%)	Filter (°F)
0	-0.001		0.59	69	1.5		68
1	0.120	0.121	0.92	68	1.5	-	68
2	0.261	0.141	0.94	68	1.7	-	68
3	0.401	0.140	0.91	68	1.6	-	68
4	0.544	0.143	0.94	68	1.7	-	68
5	0.684	0.140	0.92	68	1.5	-	68
6	0.827	0.143	0.94	69	1.6	-	68
7	0.969	0.142	0.95	69	1.6	-	68
8	1.112	0.143	0.94	69	1.6	-	68
9	1.256	0.144	0.96	69	1.5	-	68
10	1.399	0.143	0.95	69	1.7	96	68
11	1.544	0.145	0.96	70	1.7	-	68
12	1.689	0.145	0.97	69	1.7	-	68
13	1.833	0.144	0.97	69	1.7	-	68
14	1.978	0.145	0.96	70	1.5	-	68
15	2.124	0.146	0.98	69	1.6	-	68
16	2.269	0.145	0.97	70	1.6	-	68
17	2.414	0.145	0.96	70	1.5	-	68
18	2.561	0.147	0.98	70	1.8	-	68
19	2.707	0.146	0.99	71	1.6	-	68
20	2.853	0.146	0.98	71	1.5	98	68
21	2.998	0.145	0.97	72	1.6	-	68
22	3.146	0.148	0.98	72	1.7	-	67
23	3.292	0.146	0.99	72	1.6	-	67
24	3.438	0.146	0.98	72	1.6	-	67
25	3.584	0.146	0.97	72	1.7	-	67
26	3.732	0.148	0.99	72	1.6	-	67
27	3.879	0.147	0.99	73	1.8	-	67
28	4.026	0.147	0.99	72	1.7	-	67
29	4.174	0.148	0.99	73	1.7	-	67
30	4.321	0.147	0.98	74	1.7	99	67
31	4.469	0.148	0.99	74	1.6	-	68

BOX C TEST DATA - ASTM E2780 / ASTM E2515

Client: IHP
Model: I3000
Run #: 5

Job #: 23-229
Tracking #: 169
Technician: AK
Date: 12/18/2023

	Particulate Sampling Data						
Elapsed Time (min)	Gas Meter (ft^3)	Sample Rate (cfm)	Orifice dH (in H_2O)	Meter Temp (°F)	Meter Vacuum (in Hg)	Pro. Rate (%)	Filter (°F)
32	4.618	0.149	1.00	73	1.6	-	67
33	4.766	0.148	1.01	74	1.7	-	68
34	4.914	0.148	1.00	74	1.6	-	68
35	5.062	0.148	0.99	74	1.7	-	68
36	5.210	0.148	1.00	74	1.6	-	68
37	5.360	0.150	1.01	75	1.5	-	68
38	5.509	0.149	1.01	74	1.7	-	68
39	5.658	0.149	1.01	74	1.8	-	68
40	5.808	0.150	1.02	74	1.8	101	68
41	5.957	0.149	1.01	75	1.6	-	68
42	6.106	0.149	1.01	75	1.7	-	69
43	6.256	0.150	1.00	75	1.6	-	69
44	6.406	0.150	1.01	75	1.7	-	69
45	6.556	0.150	1.01	75	1.6	-	69
46	6.708	0.152	1.02	75	1.7	-	69
47	6.859	0.151	1.02	75	1.8	-	69
48	7.009	0.150	1.03	75	1.7	-	69
49	7.160	0.151	1.03	75	1.8	-	69
50	7.311	0.151	1.03	76	1.6	103	69
51	7.462	0.151	1.03	76	1.8	-	69
52	7.613	0.151	1.03	76	1.8	-	69
53	7.765	0.152	1.02	76	1.8	-	69
54	7.916	0.151	1.02	76	1.7	-	69
55	8.068	0.152	1.02	77	1.8	-	69
56	8.219	0.151	1.02	77	1.6	-	69
57	8.371	0.152	1.02	77	1.8	-	69
58	8.522	0.151	1.02	77	1.6	-	70
59	8.674	0.152	1.02	78	1.8	-	70
60	8.826	0.152	1.02	78	1.7	104	70
Avg/Tot	8.827	0.147	0.98	72.7	1.7	100	68.2

WOODSTOVE SURFACE TEMPERATURE DATA

Client: IHP
Model: I3000
Run #: 5

Job #: 23-229
Tracking #: 169
Technician: AK
Date: 12/18/2023

Stove ΔT: 120

	Temperature Data (°F)						
Elapsed Time (min)	FB Left	FB Right	FB Back	FB Top	FB Bottom	Stove Surface Average	Catalyst Exit
0	361	376	255	366	317	335.1	611.2
1	360	375	255	367	322	335.8	541.2
2	358	374	254	366	328	336.1	498.9
3	357	373	254	365	335	336.6	608.8
4	354	370	254	368	341	337.5	722.1
5	353	368	254	374	347	339.1	804.1
6	351	366	254	380	353	340.4	793.8
7	349	364	253	388	358	342.2	778.7
8	346	360	253	394	363	343.2	755.1
9	344	358	253	393	367	343.0	733.6
10	342	356	253	398	371	343.9	720.2
11	339	353	252	398	375	343.5	713.6
12	337	350	252	396	378	342.6	712.2
13	334	347	251	397	381	342.2	714.9
14	333	345	251	397	384	341.8	719.8
15	330	342	251	395	386	340.8	724.1
16	329	339	250	394	388	340.0	729.2
17	325	337	249	396	390	339.5	733.4
18	324	334	248	399	391	339.1	738.0
19	322	331	247	397	393	337.9	742.0
20	319	329	246	398	394	337.3	746.5
21	317	327	245	399	395	336.4	750.0
22	315	325	244	401	395	336.0	753.4
23	313	322	243	399	396	334.8	755.7
24	311	320	242	401	397	334.1	758.2
25	310	318	241	405	397	333.9	760.5
26	308	316	240	405	397	333.2	763.4
27	308	314	240	403	398	332.4	765.0
28	306	313	240	404	398	332.0	766.8
29	305	311	239	411	398	332.6	767.6
30	304	310	238	419	397	333.5	763.7
31	303	308	236	422	393	332.3	762.8
32	301	307	235	422	386	330.1	765.9
33	300	305	234	420	378	327.3	769.0
34	299	304	232	423	369	325.4	775.9
35	298	302	231	420	361	322.5	782.6
36	297	301	229	420	354	320.1	790.3
37	296	300	227	420	347	317.8	797.4
38	295	298	225	424	340	316.3	803.3
39	294	297	223	427	334	314.9	812.0
40	293	296	221	429	328	313.4	822.7
41	292	295	220	432	323	312.4	834.8
42	291	293	218	437	319	311.6	843.8
43	290	292	216	445	315	311.5	847.3
44	290	292	215	452	311	311.6	844.9
45	289	291	213	462	307	312.3	837.4
46	288	290	212	460	304	310.7	835.2
47	288	289	210	477	301	312.9	838.7

WOODSTOVE SURFACE TEMPERATURE DATA

Client: IHP
Model: I3000
Run #: 5

Job #: 23-229
Tracking #: 169
Technician: AK
Date: 12/18/2023

Stove ΔT: 120

	Temperature Data (°F)						
Elapsed Time (min)	FB Left	FB Right	FB Back	FB Top	FB Bottom	Stove Surface Average	Catalyst Exit
48	287	289	208	481	298	312.5	840.3
49	287	288	207	485	295	312.5	840.0
50	287	288	207	490	293	312.8	833.2
51	286	288	205	493	291	312.5	837.0
52	286	287	205	490	289	311.3	836.4
53	286	287	204	498	287	312.3	836.7
54	285	287	203	502	285	312.2	838.6
55	285	286	203	498	283	310.9	841.7
56	285	286	201	509	282	312.4	844.4
57	285	286	200	510	280	312.3	846.4
58	285	286	199	516	279	312.7	848.8
59	285	286	198	519	277	313.1	848.9
60	285	286	198	522	276	313.3	850.1
61	285	286	197	522	274	312.9	848.5
62	285	286	196	526	273	313.2	846.0
63	285	286	197	531	272	314.0	843.6
64	285	287	196	525	271	312.4	842.1
65	285	287	195	531	269	313.4	841.3
66	286	287	195	531	268	313.2	840.1
67	286	288	194	533	267	313.4	837.4
68	286	288	194	531	266	313.0	834.5
69	287	289	194	531	265	313.0	831.2
70	287	290	194	532	264	313.2	829.0
71	288	291	193	529	263	312.6	827.5
72	288	292	193	528	262	312.5	822.7
73	289	292	192	527	261	312.2	821.5
74	289	292	192	526	260	311.8	816.3
75	288	293	192	525	259	311.4	815.1
76	290	294	192	522	258	311.0	817.0
77	291	295	191	524	257	311.5	814.2
78	291	296	191	523	256	311.2	813.6
79	292	297	191	523	255	311.5	809.5
80	292	298	190	525	254	311.9	807.2
81	293	298	190	527	254	312.2	806.2
82	293	299	190	526	253	312.4	805.2
83	294	300	190	525	252	312.2	808.3
84	294	301	190	525	251	312.1	807.4
85	294	302	190	525	251	312.4	804.0
86	295	303	190	524	250	312.3	800.5
87	295	304	189	523	249	312.0	798.5
88	295	304	188	521	249	311.3	793.1
89	295	305	189	521	248	311.4	795.0
90	295	305	188	520	247	311.0	815.0
91	296	306	188	521	247	311.3	845.9
92	296	306	187	522	246	311.3	863.1
93	296	307	187	523	245	311.5	866.3
94	296	307	187	523	244	311.3	858.9
95	297	308	187	522	243	311.1	839.5

WOODSTOVE SURFACE TEMPERATURE DATA

Client: IHP
Model: I3000
Run #: 5

Job #: 23-229
Tracking #: 169
Technician: AK
Date: 12/18/2023

Stove ΔT: 120

	Temperature Data (°F)						
Elapsed Time (min)	FB Left	FB Right	FB Back	FB Top	FB Bottom	Stove Surface Average	Catalyst Exit
96	297	308	187	521	242	310.9	822.2
97	298	308	187	515	242	309.8	812.3
98	298	308	187	511	241	308.9	802.7
99	298	309	186	513	240	309.4	796.2
100	299	309	187	511	240	309.0	785.4
101	299	310	187	507	239	308.5	784.5
102	300	310	187	503	239	307.6	787.5
103	300	311	186	501	238	307.1	790.4
104	301	311	186	498	238	306.8	789.5
105	301	311	187	495	238	306.2	785.3
106	301	311	187	493	238	306.0	786.8
107	301	312	187	489	237	305.2	789.5
108	302	312	186	486	237	304.5	790.5
109	302	312	187	483	237	304.2	788.1
110	302	313	187	484	236	304.4	790.3
111	303	313	187	481	236	303.8	793.5
112	303	313	187	481	236	304.0	791.1
113	303	313	187	479	236	303.6	792.1
114	303	313	187	479	236	303.6	794.5
115	304	314	187	479	235	303.6	791.2
116	304	314	187	477	235	303.5	788.6
117	304	314	188	477	235	303.5	792.2
118	304	314	188	475	235	303.0	789.2
119	304	314	188	476	235	303.5	791.8
120	305	314	188	475	234	303.2	792.0
121	305	314	188	474	234	303.1	795.7
122	305	315	188	473	234	302.9	798.4
123	305	315	189	473	234	302.9	802.6
124	305	315	189	471	233	302.5	807.2
125	305	315	189	474	233	303.0	809.6
126	305	315	189	474	233	303.1	813.0
127	305	315	189	474	233	303.1	813.2
128	306	315	189	474	233	303.3	815.4
129	305	315	190	476	232	303.6	814.7
130	305	315	190	477	232	303.7	813.0
131	306	315	190	468	232	302.0	815.7
132	306	316	190	476	231	303.6	811.7
133	306	316	190	476	231	303.7	809.6
134	306	316	190	476	231	303.7	811.6
135	306	316	191	476	231	303.9	815.2
136	306	316	190	476	230	303.7	816.0
137	306	316	191	478	230	304.2	821.5
138	306	316	191	476	230	303.7	829.0
139	307	317	191	477	229	304.1	823.9
140	307	317	191	478	229	304.2	821.9
141	307	317	191	475	228	303.8	816.4
142	307	317	191	482	228	305.0	818.2
143	307	317	192	481	227	304.9	825.9

WOODSTOVE SURFACE TEMPERATURE DATA

Client: IHP
Model: I3000
Run #: 5

Job #: 23-229
Tracking #: 169
Technician: AK
Date: 12/18/2023

Stove ΔT: 120

	Temperature Data (°F)						
Elapsed Time (min)	FB Left	FB Right	FB Back	FB Top	FB Bottom	Stove Surface Average	Catalyst Exit
144	308	318	191	483	227	305.3	838.3
145	308	318	192	484	226	305.6	848.0
146	308	318	192	485	226	305.7	852.7
147	308	318	192	488	225	306.3	859.6
148	308	319	192	492	225	307.2	846.0
149	308	319	193	494	225	307.6	846.5
150	309	319	193	494	224	307.5	819.8
151	309	319	193	496	224	307.9	809.2
152	309	320	193	496	223	308.1	792.6
153	310	320	193	492	223	307.5	790.1
154	309	321	193	494	223	307.9	780.1
155	310	321	193	491	223	307.4	783.8
156	310	322	194	490	223	307.6	777.9
157	310	322	194	488	222	307.4	781.3
158	311	322	194	485	222	306.9	782.1
159	311	323	195	485	222	307.0	781.0
160	311	323	195	483	222	306.8	781.4
161	312	323	195	480	222	306.2	780.6
162	312	323	196	477	222	305.9	779.7
163	312	323	196	476	222	305.5	780.6
164	312	323	196	473	222	305.2	781.4
165	312	323	196	472	222	304.9	778.6
166	312	323	197	469	221	304.5	778.3
167	312	323	197	468	221	304.3	774.7
168	312	323	197	465	222	303.9	773.5
169	312	323	198	463	222	303.4	770.5
170	312	323	199	462	222	303.5	766.4
171	312	323	199	460	222	303.2	761.5
172	312	323	199	459	222	303.0	762.9
173	312	323	199	456	222	302.5	760.4
174	312	323	200	456	222	302.5	758.8
175	312	323	200	454	222	302.3	758.1
176	312	323	200	452	222	301.8	754.9
177	312	323	200	453	222	302.0	748.8
178	312	323	201	450	222	301.4	745.2
179	311	323	201	448	222	301.3	740.4
180	312	323	202	447	222	301.3	738.8
181	311	324	202	445	222	300.9	737.0
182	311	324	202	444	222	300.7	734.1
183	311	324	203	442	222	300.3	729.8
184	311	324	203	440	222	300.0	723.5
185	311	324	203	438	222	299.6	720.8
186	310	324	203	436	222	299.1	716.1
187	310	324	204	435	222	298.7	712.3
188	309	324	204	432	222	298.2	705.7
189	309	324	204	429	222	297.6	702.5
190	309	323	204	426	222	296.8	698.8
191	309	323	204	423	222	296.2	695.6

WOODSTOVE SURFACE TEMPERATURE DATA

Client: IHP
Model: I3000
Run #: 5

Job #: 23-229
Tracking #: 169
Technician: AK
Date: 12/18/2023

Stove ΔT: 120

	Temperature Data (°F)						
Elapsed Time (min)	FB Left	FB Right	FB Back	FB Top	FB Bottom	Stove Surface Average	Catalyst Exit
192	308	323	204	422	222	295.6	690.5
193	308	322	204	416	221	294.3	689.0
194	307	322	204	419	221	294.7	683.5
195	307	322	204	416	221	294.0	680.9
196	307	322	204	414	221	293.2	677.7
197	306	321	204	411	220	292.4	674.7
198	306	321	203	409	220	291.6	670.3
199	305	320	203	407	220	291.1	666.4
200	305	320	203	405	219	290.3	664.8
201	304	320	203	402	219	289.7	658.6
202	304	319	203	401	219	289.2	656.9
203	304	319	203	398	218	288.3	654.3
204	303	319	203	394	218	287.4	649.2
205	303	318	202	395	218	287.1	648.3
206	302	318	202	393	217	286.3	646.5
207	301	317	202	390	217	285.5	642.5
208	301	316	202	389	217	285.0	639.8
209	300	316	201	386	216	284.0	639.0
210	300	315	201	386	216	283.6	635.7
211	299	315	202	383	216	282.9	633.6
212	299	314	201	382	216	282.3	631.5
213	298	314	201	380	215	281.6	629.4
214	297	313	201	378	215	280.9	626.2
215	297	312	200	377	214	280.2	622.3
216	296	312	200	376	214	279.6	624.6
217	296	311	200	372	214	278.5	621.8
218	296	311	200	371	213	278.2	618.5
219	295	310	200	368	213	277.2	615.3
220	294	310	199	370	213	277.2	615.8
221	294	309	200	369	212	276.8	612.2
222	293	309	200	369	212	276.4	612.9
223	293	308	199	367	211	275.5	615.0
224	292	307	199	365	211	274.8	611.4
225	292	307	199	364	211	274.3	612.7
226	291	306	198	363	210	273.7	609.5
227	291	305	199	360	210	272.8	606.2
228	290	305	198	361	209	272.5	605.0
229	290	304	199	360	209	272.2	604.3
230	289	303	198	360	208	271.6	604.5
231	288	303	198	359	208	271.0	603.6
232	287	302	197	358	207	270.3	603.3
233	287	301	198	356	207	269.6	601.1
234	286	301	197	356	206	269.2	598.5
235	286	300	197	354	206	268.6	596.4
236	285	300	197	355	205	268.4	595.0
237	285	299	197	353	205	267.7	595.5
238	285	299	197	350	204	266.8	594.0
239	284	298	197	351	204	266.7	592.0

WOODSTOVE SURFACE TEMPERATURE DATA

Client: IHP
Model: I3000
Run #: 5

Job #: 23-229
Tracking #: 169
Technician: AK
Date: 12/18/2023

Stove ΔT: 120

	Temperature Data (°F)						
Elapsed Time (min)	FB Left	FB Right	FB Back	FB Top	FB Bottom	Stove Surface Average	Catalyst Exit
240	283	298	196	350	203	266.0	589.5
241	283	297	196	348	203	265.4	586.7
242	283	297	196	348	203	265.3	582.6
243	282	297	196	346	202	264.5	576.3
244	282	296	196	344	202	263.9	572.3
245	281	296	196	344	202	263.7	575.0
246	281	297	196	343	202	263.6	572.2
247	281	296	195	342	202	263.1	568.8
248	280	296	195	340	201	262.5	569.1
249	280	296	195	340	201	262.5	566.9
250	280	296	195	339	201	262.3	566.3
251	280	296	195	336	201	261.6	563.3
252	280	297	195	336	201	261.7	562.4
253	280	297	194	335	201	261.5	558.4
254	279	297	194	335	201	261.2	559.4
255	279	297	194	335	201	261.2	560.4
256	279	297	194	334	201	260.9	559.3
257	279	297	194	332	201	260.5	558.3
258	278	297	194	332	201	260.5	555.3
259	279	297	194	331	201	260.3	554.6
260	278	297	194	330	201	260.0	555.4
261	278	297	194	329	202	260.0	556.9
262	278	297	193	330	202	259.9	556.4
263	278	297	193	330	202	259.9	553.7
264	277	297	193	328	202	259.3	554.4
265	278	297	193	329	202	259.7	551.8
266	277	297	193	328	202	259.3	549.5
267	277	297	193	326	202	258.9	548.2
268	277	297	192	324	202	258.6	549.6
269	277	297	193	326	202	258.9	549.3
270	277	297	192	325	202	258.6	549.8
271	277	297	193	324	202	258.6	547.3
272	276	297	192	325	203	258.6	546.7
273	276	296	192	324	203	258.3	546.8
274	276	296	192	322	203	257.7	542.4
275	275	296	192	321	203	257.3	544.1
276	275	296	192	322	203	257.5	544.9
277	275	295	192	322	203	257.4	545.0
278	275	295	192	322	203	257.3	545.0
279	275	295	192	321	203	257.1	542.1
280	275	295	191	322	203	257.2	539.8
281	274	294	191	321	204	256.8	538.9
282	273	295	192	320	204	256.6	539.1
283	273	294	192	320	204	256.6	537.3
284	273	294	191	320	204	256.4	539.5
285	273	294	191	319	204	256.0	537.1
286	273	294	191	318	204	255.9	536.4
287	272	293	191	318	204	255.6	534.3

WOODSTOVE SURFACE TEMPERATURE DATA

Client: IHP
Model: I3000
Run #: 5

Job #: 23-229
Tracking #: 169
Technician: AK
Date: 12/18/2023

Stove ΔT: 120

	Temperature Data (°F)						
Elapsed Time (min)	FB Left	FB Right	FB Back	FB Top	FB Bottom	Stove Surface Average	Catalyst Exit
288	272	293	191	319	204	255.7	536.5
289	272	293	191	315	204	254.9	533.3
290	271	293	191	316	205	255.2	532.3
291	271	292	191	316	205	255.1	535.2
292	271	292	191	318	205	255.3	535.6
293	271	292	191	317	205	255.0	537.3
294	271	292	191	315	205	254.7	536.7
295	270	291	191	317	205	254.8	538.1
296	270	291	191	316	205	254.7	538.1
297	270	291	191	314	205	254.1	536.8
298	270	291	191	316	205	254.6	539.1
299	269	291	192	314	205	254.1	536.5
300	269	290	191	315	205	254.0	536.6
301	269	290	191	316	205	254.1	540.5
302	268	290	191	316	205	254.0	540.3
303	268	289	192	315	205	253.6	538.1
304	268	289	191	317	205	253.7	535.5
305	267	289	191	316	204	253.6	535.9
306	266	288	191	316	204	253.2	538.5
307	267	288	191	315	204	253.1	538.6
308	266	288	192	316	204	253.2	538.7
309	266	288	191	316	204	253.0	537.3
310	266	287	192	316	204	252.9	537.0
311	266	287	191	315	204	252.5	532.6
312	265	286	192	314	204	252.1	534.1
313	265	286	191	315	203	252.1	535.1
314	265	286	191	315	203	252.0	533.8
315	264	285	191	315	203	251.7	533.8
316	264	285	191	315	203	251.7	531.8
317	264	285	191	313	203	251.0	532.9
318	264	285	191	314	203	251.4	532.6
319	263	284	191	313	203	250.9	531.4
320	263	284	191	313	203	250.7	529.5
321	263	284	191	313	203	250.6	530.3
322	263	283	191	311	203	250.2	530.1
323	262	283	190	312	203	250.1	528.9
324	262	283	191	311	203	249.6	529.7
325	262	283	190	312	203	249.8	523.9
326	261	282	191	310	203	249.4	524.1
327	261	282	190	311	203	249.2	523.4
328	261	282	190	309	202	248.8	521.0
329	261	282	190	309	202	248.8	520.5
330	260	281	190	311	202	248.9	518.2
331	260	281	190	310	202	248.5	518.7
332	260	281	190	308	202	248.2	517.6
333	260	280	189	308	202	248.0	515.1
334	260	280	190	308	202	247.8	517.2
335	259	280	190	307	202	247.6	517.1

WOODSTOVE SURFACE TEMPERATURE DATA

Client: IHP
Model: I3000
Run #: 5

Job #: 23-229
Tracking #: 169
Technician: AK
Date: 12/18/2023

Stove ΔT: 120

	Temperature Data (°F)						
Elapsed Time (min)	FB Left	FB Right	FB Back	FB Top	FB Bottom	Stove Surface Average	Catalyst Exit
336	259	280	190	307	202	247.6	513.4
337	259	280	189	307	202	247.2	515.6
338	258	280	189	306	202	246.9	515.4
339	258	279	189	306	202	246.8	514.5
340	258	279	189	307	202	246.8	511.2
341	258	278	188	305	201	246.1	511.8
342	258	278	189	305	201	246.1	511.8
343	257	278	188	304	201	245.9	512.6
344	257	278	188	304	201	245.8	511.7
345	257	278	188	304	201	245.5	511.8
346	257	277	188	305	201	245.6	511.3
347	256	277	188	303	201	244.8	511.7
348	256	277	188	303	201	244.8	509.8
349	256	276	188	305	200	244.9	513.6
350	256	276	188	304	200	244.5	509.4
351	255	275	187	303	200	244.1	510.2
352	255	275	187	303	200	244.1	508.3
353	255	275	187	301	200	243.5	504.2
354	255	274	187	301	200	243.3	503.1
355	255	274	187	300	200	242.8	503.4
356	254	273	187	299	199	242.4	502.0
357	254	273	187	297	199	241.9	503.1
358	254	272	187	299	199	242.1	500.6
359	254	272	187	299	199	242.0	501.9
360	253	271	187	299	199	241.7	497.4
361	253	271	186	298	198	241.2	498.0
362	253	270	187	297	198	240.9	494.0
363	252	270	186	296	198	240.2	495.2
364	252	269	186	296	198	240.1	494.0
365	252	269	186	295	197	239.7	491.2
366	252	268	186	293	197	239.2	490.7
367	251	268	186	293	197	238.9	488.7
368	251	267	186	293	197	238.8	487.1
369	251	266	185	292	197	238.2	486.5
370	251	266	185	291	197	237.8	484.1
371	251	266	185	290	197	237.5	483.4
372	250	265	185	290	196	237.2	482.9
373	250	264	184	290	196	236.9	481.6
374	249	264	185	289	196	236.7	478.6
375	249	263	184	288	196	236.1	476.7
376	249	263	184	287	196	235.7	476.9
377	249	262	184	284	196	234.8	479.7
378	249	262	184	285	195	234.9	478.4
379	249	261	184	284	195	234.6	476.0
380	248	261	183	284	195	234.3	476.8
381	248	260	184	285	195	234.2	474.4
382	248	260	183	285	194	233.9	472.4
383	247	259	183	283	194	233.2	474.4

WOODSTOVE SURFACE TEMPERATURE DATA

Client: IHP
Model: I3000
Run #: 5

Job #: 23-229
Tracking #: 169
Technician: AK
Date: 12/18/2023

Stove ΔT: 120

	Temperature Data (°F)						
Elapsed Time (min)	FB Left	FB Right	FB Back	FB Top	FB Bottom	Stove Surface Average	Catalyst Exit
384	247	259	183	282	194	232.9	472.2
385	247	258	183	283	193	232.9	472.3
386	247	258	183	282	193	232.3	469.3
387	247	257	182	280	193	231.7	465.9
388	246	257	182	281	192	231.8	465.2
389	246	256	182	278	192	230.8	464.7
390	246	256	182	280	191	230.9	461.3
391	245	256	182	279	191	230.5	461.2
392	245	255	181	279	191	230.2	459.7
393	245	255	181	277	190	229.4	459.1
394	245	254	181	276	190	229.1	458.9
395	244	254	181	277	189	228.9	457.2
396	244	253	181	276	189	228.5	459.7
397	244	253	180	276	188	228.0	460.9
398	243	252	180	273	188	227.3	458.5
399	243	252	180	273	188	226.9	458.9
400	242	251	180	274	187	226.8	458.7
401	242	251	179	273	187	226.4	454.6
402	242	250	179	271	186	225.7	454.1
403	241	250	179	271	186	225.3	455.2
404	241	250	179	270	185	224.9	454.2
405	240	249	178	271	185	224.7	455.5
406	240	249	178	271	184	224.3	452.6
407	239	248	178	271	184	223.9	453.4
408	239	248	178	272	183	223.8	451.4
409	239	247	178	269	183	223.0	447.8
410	238	247	177	270	182	222.7	449.7
411	238	246	177	269	182	222.3	451.9
412	237	246	177	269	181	222.0	451.2
413	236	246	177	269	181	221.6	449.4
414	236	245	176	270	180	221.5	448.1
415	236	245	176	267	180	220.6	446.7
416	235	245	177	267	179	220.5	445.9
417	235	245	176	267	179	220.2	446.9
418	234	244	176	267	179	220.0	450.9
419	234	244	176	267	178	219.7	448.7
420	234	244	176	267	178	219.6	446.8
421	233	243	176	267	177	219.2	444.7
422	232	243	176	267	177	219.0	446.3
423	232	243	176	267	177	218.8	448.6
424	232	242	176	267	176	218.5	447.9
425	231	242	176	267	176	218.4	448.0
426	231	242	175	267	175	218.1	448.6
427	231	242	176	268	175	218.1	449.5
428	230	242	176	266	175	217.5	445.6
429	230	241	176	263	174	216.8	444.8
430	230	241	176	267	174	217.4	443.8
431	229	241	176	266	174	217.2	445.7

WOODSTOVE SURFACE TEMPERATURE DATA

Client: IHP
Model: I3000
Run #: 5

Job #: 23-229
Tracking #: 169
Technician: AK
Date: 12/18/2023

Stove ΔT: 120

	Temperature Data (°F)						
Elapsed Time (min)	FB Left	FB Right	FB Back	FB Top	FB Bottom	Stove Surface Average	Catalyst Exit
432	229	241	175	267	173	217.1	446.3
433	228	241	176	266	173	216.7	443.3
434	228	241	176	266	173	216.6	443.5
435	228	240	176	263	173	215.9	442.9
436	228	240	176	265	172	216.2	441.7
437	227	240	176	262	172	215.4	444.3
438	227	240	176	266	172	215.9	442.1
439	227	240	176	264	172	215.7	444.6
440	227	240	176	264	172	215.5	445.9
441	226	239	176	265	171	215.6	441.7
442	226	239	176	265	171	215.3	443.7
443	226	239	176	263	171	215.0	442.8
444	226	239	176	264	171	214.9	445.0
445	226	239	176	263	171	214.7	445.4
446	226	238	176	264	171	214.9	444.9
447	225	238	176	264	171	214.7	444.0
448	226	238	176	263	171	214.7	441.8
Average	281.5	294.4	195.8	380.8	229.5	276.4	639.4

LAB SAMPLE DATA - ASTM E2515

Client: IHP
Model: I3000
Run #: 5

Job #: 23-229
Tracking #: 169
Technician: AK
Date: 12/18/2023

		Sample ID	Tare, mg	Final, mg	Catch, mg
Filters	**A**	G00769	251.2	255.2	4.0
	B	G00770	259.6	263.6	4.0
	C - 1st Hour	G00771	250.5	252.2	1.7
	Amb	G00772	249.6	249.7	0.1
Probes	**A**	5A	116757.6	116758.3	0.7
	B	5B	116876.0	116876.3	0.3
	C - 1st Hour	5C	115855.4	115856.2	0.8
O-rings	**A**	5A	3536.7	3536.6	0.0
	B	5B	3532.9	3533.0	0.1
	C - 1st Hour	5C	3377.0	3377.1	0.1

**Negative value corrected to zero*

Placed in Dessicator on:	12/19/2023

Balance Audit (mg):		200.0		200.0				
		Weight (mg)	Date/Time	Weight (mg)	Date/Time	Weight (mg)	Date/Time	Weight (mg)	Date/Time
Filters	**A**	255.1	12/22 8:00	255.2	12/27 9:30				
	B	263.5	12/22 8:00	263.6	12/27 9:30				
	C - 1st Hour	252.0	12/22 8:00	252.2	12/27 9:30				
	Amb	249.6	12/22 8:00	249.7	12/27 9:30				
Probes	**A**	116758.3	12/22 8:00	116758.3	12/27 9:30				
	B	116876.3	12/22 8:00	116876.3	12/27 9:30				
	C - 1st Hour	115856.1	12/22 8:00	115856.2	12/27 9:30				
O-Rings	**A**	3536.8	12/22 8:00	3536.6	12/27 9:30				
	B	3532.9	12/22 8:00	3533.0	12/27 9:30				
	C - 1st Hour	3377.0	12/22 8:00	3377.1	12/27 9:30				

Train A Aggregate, mg:	**4.7**
Train B Aggregate, mg:	**4.4**
Train C Aggregate, mg:	**2.6**
Ambient, mg:	**0.1**

ASTM E2780 Wood Heater Run Sheets

Client: FPI Job Number: 23-229 Tracking #: 169
Model: I3000 Run Number: 5 Test Date: 12/18/23

Wood Heater Run Notes

Test Control Settings

Primary Air Setting(s): Fully Closed
Targeted Burn Category: I

Preburn Notes

Time	Notes
	-None-

Test Notes

Test Burn Start Time: 13:53 Test Fuel Loaded by: 25 seconds
Door Closed: 35 seconds Air Control Set at: 300 seconds
Other Loading Notes: Bypass open while door open, fan set to low @ 30 min

Time	Notes
	-None-

Test Burn End Time: 21:21

Flue Gas Concentration Measurement

Calibration Gas Values: Span Gas CO_2 (%): 16.98 CO (%): 4.30
Mid Gas CO_2 (%): 10.00 CO (%): 2.51

Calibration Results:

	Pre Test			Post Test		
	Zero	Span	Mid	Zero	Span	Mid
Time	12:50	12:53	12:54	12/19 12:30	12/19 12:31	12/19 12:32
CO_2	0.00	16.99	10.14	0.02	16.98	10.07
CO	0.000	4.302	2.536	0.008	4.331	2.545

Flue Gas Probe Leak Check: Initial: No Leakage Final: No Leakage

Technician Signature: [signature] Date: 12/19/23

ASTM E2780 Wood Heater Run Sheets

Client: FPI Job Number: 23-229 Tracking #: 169
Model: I3000 Run Number: 5 Test Date: 12/18/23

Test Fuel Front/Side View

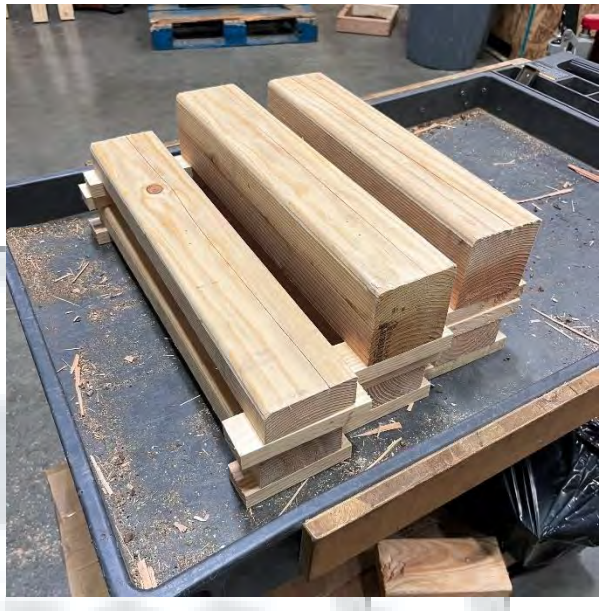

Test Fuel Iso View

Test Fuel Loaded in Stove

Air Setting

Technician Signature: Date: 12/19/23

WOOD STOVE TEST DATA PACKET
ASTM E2780/E2515

Run 6 Data Summary

Client:	IHP
Model:	I3000
Job #:	23-229
Tracking #:	169
Test Date:	12/19/2023

Techician Signature

1/29/2024
Date

WOODSTOVE FUEL DATA - ASTM E2780

Client: IHP
Model: I3000
Run #: 6

Job #: 23-229
Tracking #: 169
Technician: AK
Date: 12/19/2023

Preburn Fuel Information						
Size	Length (in)	Moisture Content (% DB)		Size	Length (in)	Moisture Content (% DB)
2x4	17.00	19.5		2x4	20.00	19.6
2x4	17.00	22.5				
2x4	17.00	20.1				
2x4	17.00	24.6				
2x4	17.00	21.1				
2x4	17.00	21.6				
2x4	20.00	22.4				
2x4	20.00	19.8				
Total Fuel Weight (lbs):		17.64		Average Moisture (%DB):		21.2

Firebox Volume (ft^3):	2.75
Total 2x4 Crib Weight, with spacers (lbs):	9.67
Total 4x4 Crib Weight, with spacers (lbs):	8.54
Total Wet Fuel Weight, with spacers (lbs):	18.21

Coal Bed Range (20-25%):
Min (lbs): 3.64
Max (lbs): 4.55

Test Fuel Information						
Size	Length (in)	Weight (lbs)	Moisture Content (%DB)			Dry Weight (lbs)
4x4	17.00	3.95	24.5	22.3	21.7	3.22
4x4	18.50	4.21	19.2	22.7	22.4	3.47
2x4	17.00	1.50	24.6	21.7	21.2	1.22
2x4	18.50	2.25	22.6	23.1	23.2	1.83
2x4	20.00	2.09	22.4	19.1	21.4	1.73
2x4	20.00	2.38	23.7	23.2	22.1	1.93
					Total Dry Weight, no spacers (lbs):	13.40
					Total Dry Weight, with spacers (lbs):	14.97

Spacer Moisture Readings (%DB)							
20.2	13.5	18.6					
14.6	19.6	12.1					
19.0	17.7						
11.7	18.6						
17.3	18.8						
18.4	11.3						
14.8	11.5						
17.5	19.7						

Quality Checks	Requirement	Observed	Result
Fuel Density	25 - 36 (lbs/ft^3, DB)	27.9	OK
Loading Density	6.3 - 7.7 (lbs/ft^3, WB)	6.62	OK
2x4 Fuel Mix	35 - 65 % of total weight	53%	OK

TEST RESULTS - ASTM E2780 / ASTM E2515

Client: IHP
Model: I3000
Run #: 6

Job #: 23-229
Tracking #: 169
Technician: AK
Date: 12/19/2023

Burn Rate (kg/hr):	1.22

	Ambient Sample	Sample Train A	Sample Train B	1st Hour Filter
Total Sample Volume (ft^3)	34.757	64.776	61.264	8.849
Average Gas Velocity in Dilution Tunnel (ft/sec)	19.4			
Average Gas Flow Rate in Dilution Tunnel (dscf/hr)	12750.5			
Average Gas Meter Temperature (°F)	72.1	98.6	98.0	81.2
Total Sample Volume (dscf)	34.231	61.370	58.068	8.658
Average Tunnel Temperature (°F)	91.4			
Total Time of Test (min)	335			
Total Particulate Catch (mg)	0.0	5.2	5.4	2.1
Particulate Concentration, dry-standard (g/dscf)	0.0000000	0.0000847	0.0000930	0.0002425
Total PM Emissions (g)	0.00	6.03	6.62	3.09
Particulate Emission Rate (g/hr)	0.00	1.08	1.19	3.09
Emissions Factor (g/kg)	-	0.89	0.97	-
Difference from Average Total Particulate Emissions (g)	-	0.29	0.29	-
Difference from Average Total Particulate Emissions (%)	-	4.6%	4.6%	
Difference from Average Emissions Factor (g/kg)	-	0.04	0.04	-

Final Average Results	
Total Particulate Emissions (g)	6.33
Particulate Emission Rate (g/hr)	1.13
Emissions Factor (g/kg)	0.93
HHV Efficiency (%)	78.1%
LHV Efficiency (%)	84.4%
CO Emissions (g/min)	0.14

Quality Checks	Requirement	Observed	Result
Dual Train Precision	Each train within 7.5% of average emissions (in grams), or emission factors within 0.5 g/kg	See Above	OK
Filter Temps	<90 °F	84.4	OK
Face Velocity	< 30 ft/min	10.6	OK
Leakage Rate	Less than 4% of average sample rate	0 cfm	OK
Ambient Temp	55-90 °F	Min:68.7/Max:73.6	OK
Negative Probe Weight Evaluation	<5% of Total Catch	Probe Catch Not Negative	OK
Pro-Rate Variation	90% of readings between 90-110%; none greater than 120% or less than 80%	See Data Tabs	OK
Stove Surface ΔT	<126°F	80.4	OK

B415.1 Efficiency Results

Manufacturer:	IHP
Model:	I3000
Date:	12/19/23
Run:	6
Control #:	23-229
Test Duration:	335
Output Category:	2

Test Results in Accordance with CSA B415.1-09

	HHV Basis	LHV Basis
Overall Efficiency	78.1%	84.4%
Combustion Efficiency	99.5%	99.5%
Heat Transfer Efficiency	78.5%	84.8%

Output Rate (kJ/h)	18,704	17,742	**(Btu/h)**
Burn Rate (kg/h)	1.21	2.67	**(lb/h)**
Input (kJ/h)	23,960	22,728	**(Btu/h)**

Test Load Weight (dry kg)	6.75	14.88	**dry lb**
MC wet (%)	18.22		
MC dry (%)	22.28		
Particulate (g)	6.33		
CO (g)	46		
Test Duration (h)	5.58		

Emissions	Particulate	CO
g/MJ Output	0.06	0.44
g/kg Dry Fuel	0.94	6.74
g/h	1.13	8.15
g/min	0.02	0.14
lb/MM Btu Output	0.14	1.01

Air/Fuel Ratio (A/F)	14.72

VERSION: **2.4** **4/15/2010**

DILUTION TUNNEL & MISC. DATA - ASTM E2780 / E2515

Client:	IHP	Job #:	23-229
Model:	I3000	Tracking #:	169
Run #:	6	Technician:	AK
Test Start Time:	12:59	Date:	12/19/2023

Total Sampling Time (min):	335	
Recording Interval (min):	1	
Meter Box γ Factor:	1.004	(A)
Meter Box γ Factor:	1.004	(B)
Meter Box γ Factor:	1.011	(C)
Meter Box γ Factor:	1.003	(Ambient)
Induced Draft Check (in. H_2O):	0	
Smoke Capture Check (%):	100%	
Date Flue Pipe Last Cleaned:	11/13/2023	
Test Fuel Scale Audit (lbs)	10.00	
Platform Scale Audit (lbs)	10.0	

	Pre-Test	Post Test	Avg.
Barometric Pressure (in. Hg)	29.47	29.77	29.62
Relative Humidity (%)	35.6	28.8	
Room Air Velocity (ft/min)	<50	<50	
Pitot Tube Leak Check	0	0	
Ambient Sample Volume:		34.757	ft^3

Sample Train Leak Checks

	Pre-test	Post-test			
(A)	0.000	0.000	cfm @	-5	in. Hg
(B)	0.000	0.000	cfm @	-5	in. Hg
(C)	0.000	0.000	cfm @	-5	in. Hg
(Ambient)	0.000	0.000	cfm @	-12	in. Hg

DILUTION TUNNEL FLOW

Traverse Data

Point	dP (in H_2O)	Temp (°F)
1	0.074	92
2	0.094	92
3	0.090	92
4	0.076	92
5	0.074	92
6	0.090	92
7	0.094	92
8	0.070	92
Center	0.089	92

Dilution Tunnel H_2O:	2.00	percent
Tunnel Diameter:	6	inches
Pitot Tube Cp:	0.99	[unitless]
Dilution Tunnel MW(dry):	29.00	lb/lb-mole
Dilution Tunnel MW(wet):	28.78	lb/lb-mole
Tunnel Area:	0.1963	ft^2
V_{strav}:	19.61	ft/sec
V_{scent}:	20.37	ft/sec
F_p:	0.963	[ratio]
Initial Tunnel Flow:	213.8	scf/min

Static Pressure: -0.160 in. H_2O

TEST FUEL PROPERTIES

Fuel Load Configuration

Firebox Front

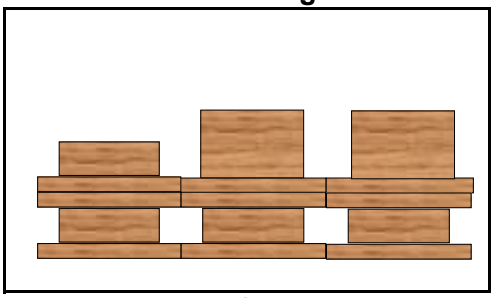

Firebox Back

Firebox Side View

Actual Fuel Used Properties

Fuel Type:	D. Fir
HHV (kJ/kg)	19,810
%C	48.73
%H	6.87
%O	43.9
%Ash	0.5
MC (%DB)	22.3

WOODSTOVE PREBURN DATA - ASTM E2780

Client: IHP
Model: I3000
Run #: 6

Job #: 23-229
Tracking #: 169
Technician: AK
Date: 12/19/2023

Recording Interval (min): 1
Run Time (min): 60

			Temperatures (°F)							
Elapsed Time (min)	Scale Reading (lbs)	Flue Draft (in H_2O)	FB Left	FB Right	FB Back	FB Top	FB Bottom	Stove Surface Average	Flue	Ambient
0	5.48	-0.069	416	462	307	661	459	461.0	441	73
1	5.44	-0.065	417	463	307	655	457	459.9	403	73
2	5.39	-0.065	418	463	309	654	452	459.2	384	73
3	5.38	-0.063	419	464	309	644	446	456.4	374	73
4	5.36	-0.064	420	464	310	637	439	454.1	365	73
5	5.32	-0.060	422	465	310	627	432	451.1	359	73
6	5.30	-0.060	422	465	310	619	425	448.4	353	73
7	5.28	-0.060	423	465	310	610	418	445.1	350	73
8	5.26	-0.059	423	465	310	600	412	442.1	347	73
9	5.24	-0.059	424	465	310	592	407	439.2	342	73
10	5.22	-0.057	423	464	310	582	401	436.0	339	73
11	5.18	-0.057	423	463	309	572	396	432.6	336	73
12	5.15	-0.058	423	463	308	566	392	430.2	332	73
13	5.13	-0.056	422	462	307	556	387	426.8	330	73
14	5.11	-0.056	421	461	306	551	383	424.4	327	73
15	5.09	-0.055	420	460	306	542	379	421.4	325	73
16	5.06	-0.055	420	459	305	535	376	418.9	322	72
17	5.04	-0.055	418	457	304	529	373	416.1	321	73
18	5.03	-0.054	417	455	303	524	370	413.6	318	73
19	5.00	-0.055	416	454	302	518	367	411.5	316	73
20	4.98	-0.055	415	452	301	511	364	408.8	315	73
21	4.95	-0.055	414	451	300	507	362	406.7	314	73
22	4.94	-0.052	413	450	299	501	359	404.4	312	73
23	4.91	-0.054	411	448	298	497	357	402.2	310	73
24	4.89	-0.053	410	446	297	491	355	399.9	308	73
25	4.86	-0.054	409	445	297	487	353	398.1	306	73
26	4.85	-0.055	407	443	295	482	351	395.5	306	73
27	4.82	-0.053	406	442	295	478	349	393.8	304	73
28	4.80	-0.050	404	440	293	474	347	391.7	302	73
29	4.78	-0.052	403	438	292	471	346	389.8	301	73
30	4.76	-0.049	402	436	290	467	344	387.8	300	73
31	4.74	-0.052	400	435	291	465	343	386.5	299	73
32	4.72	-0.052	399	433	288	458	342	384.0	296	73
33	4.69	-0.050	398	432	288	458	341	383.1	295	73
34	4.67	-0.050	396	430	288	453	339	381.3	295	73
35	4.65	-0.050	395	429	286	449	339	379.4	294	73
36	4.63	-0.051	394	427	286	447	338	378.3	292	73
37	4.61	-0.050	393	426	285	444	337	376.8	291	73
38	4.58	-0.050	391	424	284	440	336	374.9	289	73
39	4.58	-0.050	390	422	283	439	335	373.8	287	73
40	4.55	-0.049	388	421	281	437	335	372.2	287	72
41	4.53	-0.050	387	419	280	432	334	370.4	287	72
42	4.51	-0.047	386	417	279	432	333	369.5	285	73
43	4.50	-0.052	384	416	279	428	333	367.9	284	72
44	4.48	-0.050	383	415	278	426	332	366.8	283	72

WOODSTOVE PREBURN DATA - ASTM E2780

Client: IHP
Model: I3000
Run #: 6

Job #: 23-229
Tracking #: 169
Technician: AK
Date: 12/19/2023

Recording Interval (min): 1
Run Time (min): 60

			Temperatures (°F)							
Elapsed Time (min)	Scale Reading (lbs)	Flue Draft (in H_2O)	FB Left	FB Right	FB Back	FB Top	FB Bottom	Stove Surface Average	Flue	Ambient
45	4.47	-0.050	381	413	277	423	332	365.2	283	72
46	4.44	-0.049	380	412	277	423	331	364.6	282	72
47	4.42	-0.048	379	410	274	420	331	362.8	282	72
48	4.39	-0.048	378	409	274	418	330	361.7	280	72
49	4.38	-0.048	376	407	273	417	330	360.6	280	72
50	4.35	-0.047	375	406	273	414	329	359.2	279	72
51	4.34	-0.048	374	405	272	412	328	358.2	278	72
52	4.32	-0.047	373	403	271	411	328	357.0	277	72
53	4.30	-0.048	372	401	270	408	327	355.7	275	72
54	4.28	-0.048	370	400	269	406	326	354.4	274	72
55	4.27	-0.047	369	399	268	405	326	353.4	274	72
56	4.24	-0.045	368	397	268	402	325	352.1	272	72
57	4.22	-0.048	367	396	266	402	324	351.0	272	72
58	4.20	-0.046	367	395	267	400	324	350.5	272	72
59	4.18	-0.047	366	393	265	397	323	348.8	273	72
60	4.17	-0.047	364	392	265	397	323	348.0	271	72

BOX A TEST DATA - ASTM E2780 / ASTM E2515

Client: IHP
Model: I3000
Run #: 6

Job #: 23-229
Tracking #: 169
Technician: AK
Date: 12/19/2023

	Particulate Sampling Data							Fuel Weight (lb)		Temperature Data (°F)			
Elapsed Time (min)	Gas Meter (ft^3)	Sample Rate (cfm)	Dilution Tunnel dP (in H_2O)	Orifice dH (in H_2O)	Meter Temp (°F)	Meter Vacuum (in Hg)	Pro. Rate (%)	Scale Reading	Weight Change	Dilution Tunnel	Flue	Filter	Ambient
0	0.000		0.087	1.20	76	1.0		18.20		102	346	76	73
1	0.130	0.130	0.088	3.09	76	1.2	-	18.18	-0.02	110	367	78	73
2	0.307	0.177	0.087	3.13	76	1.2	-	18.08	-0.10	101	334	78	72
3	0.483	0.176	0.086	3.14	76	1.2	-	17.93	-0.15	101	342	79	73
4	0.657	0.174	0.088	3.17	76	1.2	-	17.76	-0.17	103	365	79	73
5	0.834	0.177	0.088	3.19	76	1.2	-	17.59	-0.17	104	388	79	73
6	1.012	0.178	0.087	3.21	76	1.2	-	17.51	-0.08	99	365	79	73
7	1.193	0.181	0.087	3.25	77	1.2	-	17.41	-0.10	98	351	79	73
8	1.372	0.179	0.087	3.27	77	1.2	-	17.32	-0.09	97	343	79	73
9	1.549	0.177	0.086	3.28	77	1.2	-	17.24	-0.08	96	338	80	73
10	1.729	0.180	0.089	3.28	77	1.2	94	17.15	-0.09	96	334	80	72
11	1.910	0.181	0.087	3.30	77	1.2	-	17.06	-0.09	96	333	80	73
12	2.093	0.183	0.086	3.32	77	1.2	-	16.96	-0.10	96	334	80	72
13	2.274	0.181	0.085	3.34	78	1.2	-	16.86	-0.10	95	335	80	72
14	2.453	0.179	0.086	3.34	78	1.2	-	16.75	-0.11	96	338	80	72
15	2.634	0.181	0.089	3.35	78	1.2	-	16.64	-0.11	96	341	80	72
16	2.819	0.185	0.086	3.37	78	1.2	-	16.52	-0.12	96	344	80	72
17	3.003	0.184	0.087	3.37	79	1.2	-	16.40	-0.12	96	348	80	72
18	3.186	0.183	0.087	3.38	79	1.2	-	16.28	-0.12	97	351	80	73
19	3.370	0.184	0.087	3.40	79	1.2	-	16.15	-0.13	97	355	80	72
20	3.551	0.181	0.087	3.39	80	1.3	98	16.02	-0.13	97	356	80	73
21	3.733	0.182	0.087	3.40	80	1.2	-	15.88	-0.14	97	360	81	73
22	3.920	0.187	0.086	3.42	80	1.2	-	15.74	-0.14	98	363	81	73
23	4.105	0.185	0.086	3.41	81	1.2	-	15.59	-0.15	97	367	81	72
24	4.291	0.186	0.085	3.43	81	1.2	-	15.46	-0.13	98	367	81	72
25	4.476	0.185	0.087	3.44	81	1.3	-	15.32	-0.14	98	368	81	72
26	4.658	0.182	0.086	3.43	82	1.2	-	15.20	-0.12	98	369	81	72
27	4.844	0.186	0.087	3.45	82	1.2	-	15.06	-0.14	98	368	81	72
28	5.029	0.185	0.085	3.45	82	1.3	-	14.93	-0.13	98	368	81	72
29	5.216	0.187	0.086	3.45	83	1.2	-	14.80	-0.13	98	369	81	72
30	5.403	0.187	0.087	3.46	83	1.3	100	14.67	-0.13	98	369	81	72
31	5.590	0.187	0.088	3.47	83	1.3	-	14.53	-0.14	97	368	81	72

BOX A TEST DATA - ASTM E2780 / ASTM E2515

Client: IHP
Model: I3000
Run #: 6

Job #: 23-229
Tracking #: 169
Technician: AK
Date: 12/19/2023

	Particulate Sampling Data							Fuel Weight (lb)		Temperature Data (°F)			
Elapsed Time (min)	Gas Meter (ft^3)	Sample Rate (cfm)	Dilution Tunnel dP (in H_2O)	Orifice dH (in H_2O)	Meter Temp (°F)	Meter Vacuum (in Hg)	Pro. Rate (%)	Scale Reading	Weight Change	Dilution Tunnel	Flue	Filter	Ambient
32	5.776	0.186	0.088	3.48	84	1.3	-	14.40	-0.13	98	369	81	72
33	5.960	0.184	0.088	3.47	84	1.3	-	14.28	-0.12	97	368	81	73
34	6.147	0.187	0.086	3.48	85	1.2	-	14.15	-0.13	97	367	81	72
35	6.332	0.185	0.088	3.48	85	1.3	-	14.03	-0.12	97	368	81	72
36	6.521	0.189	0.086	3.49	85	1.2	-	13.90	-0.13	98	368	81	72
37	6.708	0.187	0.087	3.50	86	1.2	-	13.76	-0.14	98	368	81	73
38	6.898	0.190	0.087	3.50	86	1.2	-	13.64	-0.12	98	369	81	72
39	7.085	0.187	0.087	3.49	86	1.3	-	13.49	-0.15	98	369	81	72
40	7.274	0.189	0.087	3.50	87	1.2	100	13.35	-0.14	98	372	81	72
41	7.459	0.185	0.088	3.50	87	1.3	-	13.22	-0.13	98	373	81	73
42	7.647	0.188	0.087	3.51	87	1.3	-	13.08	-0.14	98	374	82	73
43	7.834	0.187	0.089	3.50	88	1.3	-	12.95	-0.13	98	372	82	73
44	8.023	0.189	0.087	3.51	88	1.2	-	12.82	-0.13	98	372	82	73
45	8.213	0.190	0.087	3.52	88	1.3	-	12.70	-0.12	98	371	82	73
46	8.402	0.189	0.087	3.51	89	1.3	-	12.58	-0.12	98	369	82	73
47	8.592	0.190	0.088	3.53	89	1.2	-	12.46	-0.12	98	370	82	73
48	8.781	0.189	0.087	3.53	89	1.2	-	12.34	-0.12	98	369	82	73
49	8.970	0.189	0.086	3.53	89	1.3	-	12.22	-0.12	98	369	82	73
50	9.157	0.187	0.085	3.52	90	1.2	101	12.10	-0.12	98	367	82	73
51	9.346	0.189	0.087	3.54	90	1.3	-	11.99	-0.11	98	367	82	73
52	9.535	0.189	0.088	3.52	90	1.2	-	11.87	-0.12	98	367	82	73
53	9.724	0.189	0.087	3.53	91	1.2	-	11.73	-0.14	98	369	82	73
54	9.916	0.192	0.087	3.56	91	1.2	-	11.61	-0.12	98	369	82	73
55	10.105	0.189	0.087	3.54	91	1.2	-	11.49	-0.12	98	367	82	73
56	10.297	0.192	0.087	3.56	91	1.3	-	11.39	-0.10	98	366	82	73
57	10.488	0.191	0.088	3.56	92	1.3	-	11.28	-0.11	98	365	82	73
58	10.678	0.190	0.087	3.56	92	1.3	-	11.17	-0.11	98	365	82	73
59	10.868	0.190	0.087	3.55	92	1.2	-	11.07	-0.10	98	362	82	73
60	11.057	0.189	0.087	3.56	92	1.2	101	10.96	-0.11	97	362	82	73
61	11.247	0.190	0.085	3.55	93	1.3	-	10.86	-0.10	97	361	82	73
62	11.438	0.191	0.085	3.56	93	1.2	-	10.75	-0.11	97	361	82	73
63	11.628	0.190	0.087	3.57	93	1.3	-	10.65	-0.10	97	359	82	73

BOX A TEST DATA - ASTM E2780 / ASTM E2515

Client: IHP
Model: I3000
Run #: 6

Job #: 23-229
Tracking #: 169
Technician: AK
Date: 12/19/2023

	Particulate Sampling Data							Fuel Weight (lb)		Temperature Data (°F)			
Elapsed Time (min)	Gas Meter (ft^3)	Sample Rate (cfm)	Dilution Tunnel dP (in H_2O)	Orifice dH (in H_2O)	Meter Temp (°F)	Meter Vacuum (in Hg)	Pro. Rate (%)	Scale Reading	Weight Change	Dilution Tunnel	Flue	Filter	Ambient
64	11.820	0.192	0.086	3.56	93	1.2	-	10.55	-0.10	97	358	82	73
65	12.012	0.192	0.087	3.57	94	1.2	-	10.44	-0.11	97	358	82	73
66	12.203	0.191	0.085	3.57	94	1.3	-	10.34	-0.10	97	357	82	73
67	12.396	0.193	0.087	3.58	94	1.2	-	10.24	-0.10	97	356	82	73
68	12.588	0.192	0.088	3.58	94	1.2	-	10.14	-0.10	97	355	82	73
69	12.779	0.191	0.086	3.59	95	1.2	-	10.05	-0.09	97	355	82	73
70	12.971	0.192	0.087	3.59	95	1.3	101	9.96	-0.09	97	354	82	73
71	13.163	0.192	0.088	3.59	95	1.3	-	9.86	-0.10	97	354	82	74
72	13.352	0.189	0.085	3.58	95	1.3	-	9.76	-0.10	97	353	82	74
73	13.544	0.192	0.087	3.60	95	1.2	-	9.68	-0.08	97	350	82	74
74	13.737	0.193	0.087	3.58	96	1.2	-	9.58	-0.10	96	351	82	74
75	13.928	0.191	0.087	3.58	96	1.3	-	9.51	-0.07	96	350	82	73
76	14.120	0.192	0.089	3.58	96	1.3	-	9.42	-0.09	96	351	82	74
77	14.315	0.195	0.087	3.60	96	1.3	-	9.34	-0.08	96	351	82	74
78	14.507	0.192	0.087	3.60	96	1.2	-	9.26	-0.08	96	351	82	73
79	14.700	0.193	0.087	3.59	96	1.3	-	9.18	-0.08	96	351	82	74
80	14.894	0.194	0.087	3.60	97	1.3	101	9.09	-0.09	96	351	82	74
81	15.087	0.193	0.086	3.60	97	1.3	-	9.03	-0.06	96	352	82	73
82	15.279	0.192	0.086	3.61	97	1.3	-	8.93	-0.10	96	351	82	73
83	15.472	0.193	0.087	3.61	97	1.3	-	8.85	-0.08	96	352	82	73
84	15.666	0.194	0.088	3.62	97	1.3	-	8.78	-0.07	96	352	82	73
85	15.858	0.192	0.087	3.60	97	1.3	-	8.69	-0.09	96	351	82	73
86	16.050	0.192	0.087	3.61	98	1.3	-	8.62	-0.07	96	352	82	73
87	16.243	0.193	0.088	3.61	98	1.3	-	8.54	-0.08	96	350	82	73
88	16.437	0.194	0.088	3.62	98	1.3	-	8.46	-0.08	96	350	82	73
89	16.629	0.192	0.087	3.62	98	1.3	-	8.39	-0.07	96	351	82	73
90	16.822	0.193	0.086	3.62	98	1.2	101	8.32	-0.07	96	349	82	73
91	17.017	0.195	0.088	3.63	98	1.3	-	8.25	-0.07	96	349	82	73
92	17.212	0.195	0.087	3.63	98	1.3	-	8.16	-0.09	96	348	82	73
93	17.405	0.193	0.088	3.63	99	1.3	-	8.09	-0.07	96	348	82	73
94	17.599	0.194	0.086	3.63	99	1.2	-	8.03	-0.06	96	347	82	73
95	17.794	0.195	0.088	3.63	99	1.2	-	7.96	-0.07	96	347	82	73

BOX A TEST DATA - ASTM E2780 / ASTM E2515

Client: IHP
Model: I3000
Run #: 6

Job #: 23-229
Tracking #: 169
Technician: AK
Date: 12/19/2023

	Particulate Sampling Data							Fuel Weight (lb)		Temperature Data (°F)			
Elapsed Time (min)	Gas Meter (ft^3)	Sample Rate (cfm)	Dilution Tunnel dP (in H_2O)	Orifice dH (in H_2O)	Meter Temp (°F)	Meter Vacuum (in Hg)	Pro. Rate (%)	Scale Reading	Weight Change	Dilution Tunnel	Flue	Filter	Ambient
96	17.989	0.195	0.089	3.64	99	1.3	-	7.87	-0.09	96	347	82	74
97	18.183	0.194	0.087	3.63	99	1.2	-	7.81	-0.06	96	347	82	73
98	18.376	0.193	0.086	3.63	99	1.3	-	7.73	-0.08	96	347	82	73
99	18.570	0.194	0.086	3.62	99	1.3	-	7.66	-0.07	96	347	82	73
100	18.765	0.195	0.089	3.65	100	1.3	101	7.58	-0.08	96	348	82	73
101	18.958	0.193	0.090	3.64	100	1.3	-	7.49	-0.09	96	347	82	72
102	19.151	0.193	0.089	3.64	100	1.3	-	7.43	-0.06	96	348	82	72
103	19.345	0.194	0.086	3.64	100	1.3	-	7.36	-0.07	96	347	82	73
104	19.539	0.194	0.090	3.64	100	1.3	-	7.29	-0.07	96	347	82	73
105	19.734	0.195	0.088	3.65	100	1.3	-	7.23	-0.06	95	345	82	73
106	19.928	0.194	0.087	3.64	100	1.2	-	7.16	-0.07	95	346	82	73
107	20.122	0.194	0.086	3.64	100	1.3	-	7.10	-0.06	95	345	82	73
108	20.316	0.194	0.088	3.66	100	1.3	-	7.03	-0.07	95	345	82	73
109	20.513	0.197	0.089	3.65	101	1.3	-	6.97	-0.06	95	345	82	73
110	20.708	0.195	0.088	3.64	101	1.3	100	6.90	-0.07	95	343	82	73
111	20.902	0.194	0.088	3.63	101	1.2	-	6.83	-0.07	95	344	82	73
112	21.097	0.195	0.086	3.63	101	1.2	-	6.77	-0.06	95	342	82	73
113	21.292	0.195	0.087	3.64	101	1.2	-	6.71	-0.06	95	341	82	73
114	21.489	0.197	0.088	3.66	101	1.3	-	6.65	-0.06	95	341	82	73
115	21.683	0.194	0.088	3.65	101	1.3	-	6.59	-0.06	95	340	82	73
116	21.878	0.195	0.088	3.65	101	1.3	-	6.53	-0.06	95	338	82	73
117	22.072	0.194	0.089	3.65	101	1.2	-	6.46	-0.07	94	338	82	73
118	22.267	0.195	0.088	3.62	101	1.3	-	6.41	-0.05	94	337	82	73
119	22.463	0.196	0.087	3.64	101	1.2	-	6.35	-0.06	95	336	82	73
120	22.657	0.194	0.086	3.63	101	1.2	101	6.29	-0.06	94	337	82	73
121	22.852	0.195	0.087	3.63	102	1.2	-	6.23	-0.06	94	335	82	73
122	23.045	0.193	0.086	3.65	102	1.3	-	6.17	-0.06	94	336	81	73
123	23.240	0.195	0.089	3.61	102	1.3	-	6.10	-0.07	94	335	81	73
124	23.436	0.196	0.088	3.64	102	1.3	-	6.06	-0.04	93	334	81	73
125	23.631	0.195	0.088	3.63	102	1.3	-	6.00	-0.06	93	333	81	74
126	23.825	0.194	0.087	3.64	102	1.3	-	5.94	-0.06	94	332	81	73
127	24.020	0.195	0.087	3.64	102	1.3	-	5.88	-0.06	94	331	81	73

BOX A TEST DATA - ASTM E2780 / ASTM E2515

Client: IHP
Model: I3000
Run #: 6

Job #: 23-229
Tracking #: 169
Technician: AK
Date: 12/19/2023

	Particulate Sampling Data							Fuel Weight (lb)		Temperature Data (°F)			
Elapsed Time (min)	Gas Meter (ft^3)	Sample Rate (cfm)	Dilution Tunnel dP (in H_2O)	Orifice dH (in H_2O)	Meter Temp (°F)	Meter Vacuum (in Hg)	Pro. Rate (%)	Scale Reading	Weight Change	Dilution Tunnel	Flue	Filter	Ambient
128	24.216	0.196	0.086	3.65	102	1.3	-	5.82	-0.06	93	331	81	73
129	24.411	0.195	0.088	3.65	102	1.3	-	5.78	-0.04	93	331	81	74
130	24.607	0.196	0.087	3.64	102	1.3	101	5.71	-0.07	93	331	81	74
131	24.803	0.196	0.088	3.64	102	1.3	-	5.66	-0.05	93	329	81	74
132	24.997	0.194	0.087	3.64	102	1.3	-	5.59	-0.07	93	328	81	74
133	25.193	0.196	0.086	3.65	102	1.3	-	5.55	-0.04	93	328	81	73
134	25.389	0.196	0.087	3.65	102	1.3	-	5.49	-0.06	93	328	81	73
135	25.586	0.197	0.087	3.65	102	1.3	-	5.43	-0.06	93	328	81	73
136	25.781	0.195	0.088	3.65	102	1.3	-	5.37	-0.06	93	327	81	73
137	25.976	0.195	0.088	3.65	103	1.3	-	5.33	-0.04	93	328	81	73
138	26.171	0.195	0.086	3.64	103	1.3	-	5.28	-0.05	93	328	81	73
139	26.367	0.196	0.087	3.67	103	1.3	-	5.21	-0.07	93	327	81	73
140	26.562	0.195	0.088	3.65	103	1.2	101	5.16	-0.05	93	327	81	73
141	26.758	0.196	0.089	3.63	103	1.3	-	5.11	-0.05	93	328	81	73
142	26.953	0.195	0.087	3.66	103	1.3	-	5.04	-0.07	93	327	81	73
143	27.147	0.194	0.087	3.65	103	1.2	-	4.98	-0.06	93	328	81	73
144	27.342	0.195	0.088	3.65	103	1.3	-	4.93	-0.05	93	328	81	73
145	27.537	0.195	0.088	3.65	103	1.3	-	4.86	-0.07	93	328	81	73
146	27.733	0.196	0.086	3.64	103	1.3	-	4.80	-0.06	93	328	81	73
147	27.929	0.196	0.087	3.62	103	1.3	-	4.74	-0.06	93	327	81	73
148	28.124	0.195	0.090	3.63	103	1.2	-	4.68	-0.06	93	329	81	73
149	28.319	0.195	0.088	3.61	103	1.3	-	4.63	-0.05	93	329	81	73
150	28.515	0.196	0.087	3.63	103	1.2	101	4.58	-0.05	93	329	81	73
151	28.710	0.195	0.089	3.63	103	1.2	-	4.54	-0.04	93	328	81	73
152	28.907	0.197	0.087	3.62	103	1.3	-	4.50	-0.04	93	327	81	73
153	29.103	0.196	0.087	3.63	103	1.3	-	4.46	-0.04	93	326	81	73
154	29.299	0.196	0.087	3.63	103	1.3	-	4.41	-0.05	93	324	81	73
155	29.494	0.195	0.087	3.66	103	1.3	-	4.37	-0.04	93	321	81	73
156	29.690	0.196	0.089	3.66	103	1.2	-	4.34	-0.03	93	319	81	73
157	29.886	0.196	0.088	3.65	103	1.2	-	4.30	-0.04	93	316	81	73
158	30.083	0.197	0.089	3.65	103	1.3	-	4.26	-0.04	93	313	81	73
159	30.279	0.196	0.089	3.66	103	1.3	-	4.23	-0.03	93	312	81	73

BOX A TEST DATA - ASTM E2780 / ASTM E2515

Client: IHP
Model: I3000
Run #: 6

Job #: 23-229
Tracking #: 169
Technician: AK
Date: 12/19/2023

	Particulate Sampling Data							Fuel Weight (lb)		Temperature Data (°F)			
Elapsed Time (min)	Gas Meter (ft^3)	Sample Rate (cfm)	Dilution Tunnel dP (in H_2O)	Orifice dH (in H_2O)	Meter Temp (°F)	Meter Vacuum (in Hg)	Pro. Rate (%)	Scale Reading	Weight Change	Dilution Tunnel	Flue	Filter	Ambient
160	30.476	0.197	0.087	3.67	103	1.3	101	4.20	-0.03	92	310	81	73
161	30.671	0.195	0.088	3.68	103	1.3	-	4.17	-0.03	92	307	81	73
162	30.866	0.195	0.089	3.69	103	1.3	-	4.13	-0.04	92	306	81	73
163	31.062	0.196	0.086	3.66	103	1.3	-	4.10	-0.03	92	303	81	73
164	31.258	0.196	0.089	3.65	103	1.2	-	4.07	-0.03	92	303	81	73
165	31.454	0.196	0.087	3.66	103	1.3	-	4.05	-0.02	92	302	81	73
166	31.650	0.196	0.088	3.67	103	1.3	-	4.00	-0.05	92	300	81	73
167	31.845	0.195	0.089	3.65	103	1.3	-	3.97	-0.03	92	300	81	73
168	32.039	0.194	0.087	3.67	103	1.2	-	3.93	-0.04	92	298	81	73
169	32.235	0.196	0.087	3.64	103	1.3	-	3.91	-0.02	92	297	81	73
170	32.431	0.196	0.088	3.62	104	1.3	101	3.87	-0.04	91	296	81	73
171	32.628	0.197	0.086	3.62	104	1.3	-	3.84	-0.03	91	294	81	73
172	32.823	0.195	0.089	3.64	104	1.3	-	3.81	-0.03	91	293	81	73
173	33.018	0.195	0.089	3.64	104	1.3	-	3.78	-0.03	91	292	81	73
174	33.214	0.196	0.090	3.65	104	1.3	-	3.75	-0.03	91	292	81	73
175	33.410	0.196	0.088	3.67	104	1.3	-	3.71	-0.04	91	291	81	73
176	33.606	0.196	0.087	3.65	104	1.2	-	3.69	-0.02	91	291	81	73
177	33.804	0.198	0.087	3.65	104	1.2	-	3.65	-0.04	91	290	81	73
178	34.000	0.196	0.090	3.65	104	1.3	-	3.61	-0.04	91	290	81	73
179	34.196	0.196	0.088	3.65	104	1.3	-	3.57	-0.04	91	288	81	73
180	34.392	0.196	0.088	3.65	104	1.3	100	3.56	-0.01	91	287	80	73
181	34.588	0.196	0.089	3.65	104	1.3	-	3.52	-0.04	91	287	81	73
182	34.784	0.196	0.089	3.64	104	1.2	-	3.48	-0.04	91	287	80	73
183	34.981	0.197	0.088	3.64	104	1.3	-	3.46	-0.02	91	287	80	73
184	35.178	0.197	0.089	3.65	104	1.2	-	3.42	-0.04	91	287	80	73
185	35.374	0.196	0.090	3.64	104	1.2	-	3.38	-0.04	91	286	80	73
186	35.570	0.196	0.088	3.64	104	1.3	-	3.35	-0.03	91	286	80	73
187	35.766	0.196	0.087	3.62	104	1.3	-	3.32	-0.03	91	286	80	73
188	35.962	0.196	0.089	3.63	104	1.3	-	3.28	-0.04	91	287	80	73
189	36.157	0.195	0.088	3.62	104	1.3	-	3.24	-0.04	91	287	80	73
190	36.355	0.198	0.088	3.63	104	1.3	100	3.21	-0.03	91	287	80	73
191	36.550	0.195	0.088	3.62	104	1.3	-	3.17	-0.04	91	288	80	73

BOX A TEST DATA - ASTM E2780 / ASTM E2515

Client: IHP
Model: I3000
Run #: 6

Job #: 23-229
Tracking #: 169
Technician: AK
Date: 12/19/2023

	Particulate Sampling Data							Fuel Weight (lb)		Temperature Data (°F)			
Elapsed Time (min)	Gas Meter (ft^3)	Sample Rate (cfm)	Dilution Tunnel dP (in H_2O)	Orifice dH (in H_2O)	Meter Temp (°F)	Meter Vacuum (in Hg)	Pro. Rate (%)	Scale Reading	Weight Change	Dilution Tunnel	Flue	Filter	Ambient
192	36.746	0.196	0.089	3.61	104	1.2	-	3.13	-0.04	91	288	80	73
193	36.941	0.195	0.086	3.63	104	1.2	-	3.09	-0.04	91	288	80	73
194	37.136	0.195	0.088	3.63	104	1.3	-	3.05	-0.04	91	289	80	73
195	37.332	0.196	0.088	3.63	104	1.3	-	3.01	-0.04	91	290	80	73
196	37.528	0.196	0.088	3.62	104	1.2	-	2.97	-0.04	91	291	80	73
197	37.725	0.197	0.088	3.62	104	1.3	-	2.93	-0.04	91	292	80	73
198	37.921	0.196	0.088	3.63	104	1.2	-	2.89	-0.04	90	293	80	73
199	38.117	0.196	0.087	3.64	104	1.3	-	2.85	-0.04	91	293	80	73
200	38.312	0.195	0.088	3.64	104	1.2	100	2.80	-0.05	91	294	80	73
201	38.508	0.196	0.087	3.64	104	1.2	-	2.78	-0.02	91	294	80	73
202	38.704	0.196	0.089	3.65	104	1.3	-	2.73	-0.05	91	292	80	73
203	38.901	0.197	0.088	3.65	104	1.2	-	2.70	-0.03	91	293	80	73
204	39.099	0.198	0.088	3.64	104	1.3	-	2.67	-0.03	91	292	80	73
205	39.295	0.196	0.087	3.64	104	1.3	-	2.63	-0.04	90	291	80	73
206	39.491	0.196	0.089	3.63	104	1.3	-	2.60	-0.03	90	291	80	73
207	39.686	0.195	0.087	3.64	104	1.3	-	2.58	-0.02	90	290	80	73
208	39.883	0.197	0.088	3.62	104	1.3	-	2.54	-0.04	90	289	80	73
209	40.079	0.196	0.089	3.64	104	1.3	-	2.51	-0.03	90	288	80	73
210	40.276	0.197	0.089	3.64	104	1.2	100	2.48	-0.03	90	286	80	73
211	40.473	0.197	0.088	3.63	104	1.3	-	2.46	-0.02	90	286	80	73
212	40.669	0.196	0.090	3.64	104	1.2	-	2.42	-0.04	90	285	80	73
213	40.865	0.196	0.088	3.64	104	1.3	-	2.39	-0.03	90	285	80	73
214	41.060	0.195	0.090	3.63	104	1.3	-	2.36	-0.03	90	284	80	73
215	41.257	0.197	0.088	3.64	104	1.3	-	2.33	-0.03	90	283	80	72
216	41.453	0.196	0.087	3.64	104	1.2	-	2.30	-0.03	90	282	80	73
217	41.650	0.197	0.090	3.65	104	1.3	-	2.29	-0.01	90	282	80	73
218	41.845	0.195	0.087	3.63	104	1.2	-	2.25	-0.04	90	282	80	72
219	42.041	0.196	0.088	3.64	104	1.3	-	2.23	-0.02	90	281	80	73
220	42.236	0.195	0.088	3.64	104	1.2	100	2.21	-0.02	90	280	80	72
221	42.431	0.195	0.090	3.62	104	1.3	-	2.18	-0.03	90	279	80	73
222	42.627	0.196	0.088	3.63	104	1.3	-	2.16	-0.02	89	279	80	72
223	42.823	0.196	0.091	3.64	104	1.2	-	2.13	-0.03	89	279	80	72

BOX A TEST DATA - ASTM E2780 / ASTM E2515

Client: IHP
Model: I3000
Run #: 6

Job #: 23-229
Tracking #: 169
Technician: AK
Date: 12/19/2023

	Particulate Sampling Data							Fuel Weight (lb)		Temperature Data (°F)			
Elapsed Time (min)	Gas Meter (ft^3)	Sample Rate (cfm)	Dilution Tunnel dP (in H_2O)	Orifice dH (in H_2O)	Meter Temp (°F)	Meter Vacuum (in Hg)	Pro. Rate (%)	Scale Reading	Weight Change	Dilution Tunnel	Flue	Filter	Ambient
224	43.020	0.197	0.089	3.63	104	1.3	-	2.10	-0.03	89	279	80	72
225	43.216	0.196	0.089	3.63	104	1.3	-	2.08	-0.02	90	277	80	72
226	43.412	0.196	0.087	3.62	104	1.3	-	2.04	-0.04	90	276	80	73
227	43.607	0.195	0.089	3.62	104	1.3	-	2.01	-0.03	89	275	80	72
228	43.803	0.196	0.089	3.63	104	1.2	-	2.00	-0.01	89	274	80	72
229	43.999	0.196	0.088	3.63	104	1.3	-	1.96	-0.04	89	273	80	72
230	44.197	0.198	0.090	3.63	104	1.3	100	1.95	-0.01	89	272	80	72
231	44.394	0.197	0.089	3.63	104	1.3	-	1.92	-0.03	89	271	80	72
232	44.590	0.196	0.090	3.62	104	1.2	-	1.90	-0.02	89	270	80	72
233	44.786	0.196	0.088	3.63	104	1.2	-	1.88	-0.02	88	269	79	72
234	44.982	0.196	0.088	3.64	104	1.3	-	1.85	-0.03	89	267	79	72
235	45.179	0.197	0.089	3.65	104	1.3	-	1.83	-0.02	88	266	79	72
236	45.375	0.196	0.088	3.64	104	1.3	-	1.81	-0.02	89	266	79	72
237	45.573	0.198	0.087	3.65	104	1.2	-	1.79	-0.02	88	264	79	72
238	45.769	0.196	0.089	3.63	104	1.2	-	1.76	-0.03	88	264	79	72
239	45.965	0.196	0.087	3.64	104	1.3	-	1.74	-0.02	88	263	79	72
240	46.161	0.196	0.087	3.65	104	1.3	100	1.72	-0.02	88	263	79	72
241	46.357	0.196	0.088	3.64	104	1.3	-	1.70	-0.02	88	262	79	72
242	46.553	0.196	0.088	3.66	104	1.2	-	1.68	-0.02	88	263	79	72
243	46.749	0.196	0.090	3.64	104	1.3	-	1.66	-0.02	88	262	79	72
244	46.946	0.197	0.088	3.65	104	1.2	-	1.64	-0.02	88	262	79	72
245	47.142	0.196	0.088	3.65	104	1.3	-	1.60	-0.04	87	261	79	72
246	47.338	0.196	0.088	3.64	104	1.3	-	1.59	-0.01	88	261	79	72
247	47.533	0.195	0.089	3.65	104	1.3	-	1.57	-0.02	88	261	79	72
248	47.728	0.195	0.088	3.65	104	1.2	-	1.54	-0.03	88	261	79	72
249	47.924	0.196	0.086	3.66	104	1.2	-	1.53	-0.01	87	261	79	72
250	48.120	0.196	0.087	3.66	104	1.2	101	1.51	-0.02	87	260	79	72
251	48.317	0.197	0.088	3.66	104	1.2	-	1.48	-0.03	87	259	79	72
252	48.513	0.196	0.087	3.65	104	1.2	-	1.46	-0.02	87	258	79	72
253	48.709	0.196	0.088	3.67	104	1.3	-	1.45	-0.01	87	258	79	72
254	48.904	0.195	0.088	3.66	104	1.2	-	1.42	-0.03	87	257	79	72
255	49.100	0.196	0.088	3.68	104	1.2	-	1.40	-0.02	87	258	78	71

BOX A TEST DATA - ASTM E2780 / ASTM E2515

Client: IHP
Model: I3000
Run #: 6

Job #: 23-229
Tracking #: 169
Technician: AK
Date: 12/19/2023

	Particulate Sampling Data							Fuel Weight (lb)		Temperature Data (°F)			
Elapsed Time (min)	Gas Meter (ft^3)	Sample Rate (cfm)	Dilution Tunnel dP (in H_2O)	Orifice dH (in H_2O)	Meter Temp (°F)	Meter Vacuum (in Hg)	Pro. Rate (%)	Scale Reading	Weight Change	Dilution Tunnel	Flue	Filter	Ambient
256	49.297	0.197	0.088	3.65	104	1.2	-	1.38	-0.02	87	257	78	72
257	49.494	0.197	0.089	3.66	104	1.2	-	1.36	-0.02	87	255	78	72
258	49.691	0.197	0.088	3.65	104	1.3	-	1.34	-0.02	87	255	78	71
259	49.887	0.196	0.089	3.65	104	1.2	-	1.32	-0.02	87	254	78	71
260	50.083	0.196	0.088	3.64	104	1.3	100	1.30	-0.02	87	255	78	71
261	50.279	0.196	0.088	3.63	104	1.2	-	1.28	-0.02	87	253	78	71
262	50.475	0.196	0.088	3.63	104	1.3	-	1.26	-0.02	86	254	78	71
263	50.671	0.196	0.089	3.63	104	1.3	-	1.23	-0.03	86	254	78	71
264	50.869	0.198	0.089	3.63	104	1.3	-	1.24	0.01	86	253	78	71
265	51.065	0.196	0.089	3.65	104	1.2	-	1.21	-0.03	86	253	78	71
266	51.262	0.197	0.089	3.66	104	1.3	-	1.19	-0.02	86	252	78	71
267	51.457	0.195	0.088	3.67	104	1.3	-	1.17	-0.02	86	251	78	71
268	51.653	0.196	0.088	3.68	104	1.3	-	1.17	0.00	86	250	78	71
269	51.849	0.196	0.087	3.68	104	1.3	-	1.14	-0.03	86	252	78	71
270	52.045	0.196	0.088	3.66	103	1.3	100	1.13	-0.01	86	251	78	71
271	52.242	0.197	0.088	3.67	103	1.2	-	1.12	-0.01	86	251	78	71
272	52.437	0.195	0.088	3.64	103	1.3	-	1.10	-0.02	85	250	78	71
273	52.633	0.196	0.090	3.66	103	1.2	-	1.08	-0.02	85	249	78	71
274	52.827	0.194	0.087	3.67	103	1.3	-	1.06	-0.02	86	249	78	71
275	53.023	0.196	0.089	3.69	103	1.3	-	1.04	-0.02	86	248	78	71
276	53.218	0.195	0.087	3.70	103	1.3	-	1.03	-0.01	85	247	78	71
277	53.415	0.197	0.089	3.67	103	1.3	-	1.01	-0.02	85	247	77	71
278	53.611	0.196	0.087	3.67	103	1.3	-	0.99	-0.02	85	247	77	71
279	53.807	0.196	0.087	3.66	103	1.3	-	0.98	-0.01	85	248	77	71
280	54.002	0.195	0.089	3.65	103	1.3	99	0.96	-0.02	85	247	77	71
281	54.198	0.196	0.089	3.67	103	1.2	-	0.95	-0.01	85	247	77	71
282	54.395	0.197	0.089	3.67	103	1.3	-	0.93	-0.02	85	246	77	71
283	54.591	0.196	0.090	3.66	103	1.2	-	0.90	-0.03	85	246	77	71
284	54.788	0.197	0.089	3.65	103	1.3	-	0.89	-0.01	85	246	77	71
285	54.984	0.196	0.087	3.64	103	1.3	-	0.88	-0.01	85	245	77	71
286	55.180	0.196	0.088	3.64	103	1.3	-	0.86	-0.02	85	245	77	70
287	55.375	0.195	0.087	3.63	103	1.3	-	0.84	-0.02	85	245	77	71

BOX A TEST DATA - ASTM E2780 / ASTM E2515

Client: IHP
Model: I3000
Run #: 6

Job #: 23-229
Tracking #: 169
Technician: AK
Date: 12/19/2023

	Particulate Sampling Data							Fuel Weight (lb)		Temperature Data (°F)			
Elapsed Time (min)	Gas Meter (ft^3)	Sample Rate (cfm)	Dilution Tunnel dP (in H_2O)	Orifice dH (in H_2O)	Meter Temp (°F)	Meter Vacuum (in Hg)	Pro. Rate (%)	Scale Reading	Weight Change	Dilution Tunnel	Flue	Filter	Ambient
288	55.572	0.197	0.090	3.64	103	1.2	-	0.82	-0.02	84	244	77	70
289	55.768	0.196	0.089	3.63	103	1.3	-	0.81	-0.01	84	244	77	70
290	55.965	0.197	0.089	3.63	103	1.2	99	0.79	-0.02	84	243	77	70
291	56.162	0.197	0.090	3.63	103	1.3	-	0.77	-0.02	84	244	77	70
292	56.358	0.196	0.090	3.64	103	1.2	-	0.77	0.00	84	244	77	70
293	56.553	0.195	0.088	3.64	103	1.3	-	0.75	-0.02	84	243	77	70
294	56.749	0.196	0.088	3.66	103	1.3	-	0.73	-0.02	84	242	77	70
295	56.944	0.195	0.089	3.67	103	1.3	-	0.71	-0.02	84	242	77	70
296	57.141	0.197	0.088	3.66	103	1.3	-	0.70	-0.01	84	242	77	70
297	57.337	0.196	0.088	3.66	103	1.3	-	0.69	-0.01	84	242	77	70
298	57.533	0.196	0.089	3.67	103	1.2	-	0.66	-0.03	84	242	77	70
299	57.728	0.195	0.087	3.65	103	1.3	-	0.65	-0.01	84	241	77	70
300	57.922	0.194	0.088	3.64	103	1.2	99	0.64	-0.01	84	241	76	70
301	58.118	0.196	0.089	3.66	103	1.3	-	0.61	-0.03	84	240	76	70
302	58.313	0.195	0.089	3.67	103	1.3	-	0.60	-0.01	83	241	76	70
303	58.511	0.198	0.089	3.68	103	1.2	-	0.59	-0.01	84	240	76	70
304	58.706	0.195	0.091	3.66	103	1.3	-	0.58	-0.01	83	241	76	70
305	58.901	0.195	0.089	3.67	103	1.3	-	0.55	-0.03	83	240	76	69
306	59.097	0.196	0.089	3.68	103	1.2	-	0.55	0.00	83	239	76	69
307	59.293	0.196	0.088	3.67	103	1.3	-	0.52	-0.03	83	240	76	69
308	59.488	0.195	0.090	3.65	103	1.3	-	0.50	-0.02	83	240	76	70
309	59.686	0.198	0.090	3.65	103	1.3	-	0.49	-0.01	83	240	76	69
310	59.882	0.196	0.089	3.66	103	1.2	100	0.47	-0.02	83	240	76	69
311	60.078	0.196	0.090	3.66	102	1.3	-	0.47	0.00	83	239	76	69
312	60.273	0.195	0.088	3.66	103	1.2	-	0.44	-0.03	83	240	76	69
313	60.469	0.196	0.088	3.65	102	1.2	-	0.42	-0.02	83	240	76	69
314	60.665	0.196	0.089	3.66	102	1.2	-	0.41	-0.01	83	240	76	69
315	60.862	0.197	0.090	3.65	102	1.3	-	0.38	-0.03	83	239	76	69
316	61.059	0.197	0.087	3.65	102	1.2	-	0.36	-0.02	83	240	76	69
317	61.255	0.196	0.089	3.65	102	1.2	-	0.35	-0.01	83	240	76	69
318	61.450	0.195	0.091	3.65	102	1.2	-	0.33	-0.02	83	240	76	69
319	61.645	0.195	0.089	3.67	102	1.2	-	0.31	-0.02	83	241	76	69

BOX A TEST DATA - ASTM E2780 / ASTM E2515

Client: IHP
Model: I3000
Run #: 6

Job #: 23-229
Tracking #: 169
Technician: AK
Date: 12/19/2023

	Particulate Sampling Data							Fuel Weight (lb)		Temperature Data (°F)			
Elapsed Time (min)	Gas Meter (ft^3)	Sample Rate (cfm)	Dilution Tunnel dP (in H_2O)	Orifice dH (in H_2O)	Meter Temp (°F)	Meter Vacuum (in Hg)	Pro. Rate (%)	Scale Reading	Weight Change	Dilution Tunnel	Flue	Filter	Ambient
320	61.841	0.196	0.089	3.68	102	1.3	99	0.29	-0.02	83	241	76	69
321	62.037	0.196	0.090	3.67	102	1.3	-	0.27	-0.02	83	241	76	69
322	62.233	0.196	0.089	3.67	102	1.2	-	0.25	-0.02	83	242	76	69
323	62.429	0.196	0.089	3.66	102	1.3	-	0.23	-0.02	83	242	76	69
324	62.624	0.195	0.089	3.66	102	1.3	-	0.22	-0.01	83	242	76	69
325	62.818	0.194	0.088	3.67	102	1.2	-	0.20	-0.02	83	241	76	69
326	63.013	0.195	0.089	3.67	102	1.2	-	0.18	-0.02	83	241	76	69
327	63.209	0.196	0.089	3.66	102	1.3	-	0.16	-0.02	83	242	75	69
328	63.405	0.196	0.088	3.66	102	1.3	-	0.15	-0.01	83	242	75	69
329	63.601	0.196	0.089	3.66	102	1.3	-	0.13	-0.02	83	242	75	69
330	63.796	0.195	0.090	3.64	102	1.2	99	0.10	-0.03	83	243	75	69
331	63.991	0.195	0.090	3.64	102	1.3	-	0.08	-0.02	83	242	75	69
332	64.187	0.196	0.089	3.66	102	1.2	-	0.08	0.00	83	241	75	69
333	64.383	0.196	0.090	3.64	102	1.3	-	0.05	-0.03	83	241	75	69
334	64.580	0.197	0.090	3.65	102	1.3	-	0.04	-0.01	83	240	75	69
335	64.776	0.196	0.089	3.64	102	1.3	100	0.00	-0.04	83	239	75	69
Avg/Tot	64.776	0.193	0.088	3.59	98.6	1.2	100			91.4	304.6	79.7	72.1

BOX B TEST DATA - ASTM E2780 / ASTM E2515

Client: IHP
Model: I3000
Run #: 6

Job #: 23-229
Tracking #: 169
Technician: AK
Date: 12/19/2023

	Particulate Sampling Data							Flue Gas Data		
Elapsed Time (min)	Gas Meter (ft^3)	Sample Rate (cfm)	Orifice dH (in H_2O)	Meter Temp (°F)	Meter Vacuum (in Hg)	Pro. Rate (%)	Filter (°F)	Flue Draft (in H_2O)	CO_2 (%)	CO (%)
0	0.000		1.38	77	1.8		78	-0.058	3.51	0.015
1	0.132	0.132	3.23	77	2.0	-	81	-0.058	2.55	0.017
2	0.309	0.177	3.22	77	1.9	-	81	-0.060	4.25	0.013
3	0.487	0.178	3.23	77	2.0	-	82	-0.067	8.08	0.087
4	0.664	0.177	3.22	77	1.9	-	82	-0.070	10.03	0.129
5	0.839	0.175	3.24	77	1.8	-	82	-0.073	10.73	0.112
6	1.015	0.176	3.23	77	1.7	-	82	-0.065	9.37	0.059
7	1.193	0.178	3.23	77	1.8	-	82	-0.064	6.81	0.013
8	1.372	0.179	3.24	77	1.7	-	82	-0.063	6.57	0.014
9	1.548	0.176	3.24	78	1.7	-	82	-0.063	6.77	0.016
10	1.723	0.175	3.23	78	1.9	98	82	-0.061	7.05	0.019
11	1.900	0.177	3.23	78	1.9	-	82	-0.062	7.21	0.018
12	2.078	0.178	3.24	78	2.1	-	83	-0.063	7.46	0.019
13	2.257	0.179	3.24	79	2.2	-	83	-0.064	7.74	0.019
14	2.434	0.177	3.24	79	1.8	-	83	-0.064	8.01	0.026
15	2.610	0.176	3.24	79	1.7	-	83	-0.063	8.45	0.034
16	2.787	0.177	3.24	79	1.7	-	83	-0.065	8.81	0.037
17	2.966	0.179	3.24	80	2.1	-	83	-0.067	9.14	0.039
18	3.144	0.178	3.25	80	1.7	-	83	-0.065	9.32	0.047
19	3.321	0.177	3.25	80	2.0	-	83	-0.067	9.65	0.047
20	3.498	0.177	3.24	81	1.7	101	83	-0.068	9.89	0.046
21	3.677	0.179	3.25	81	2.1	-	83	-0.068	10.22	0.051
22	3.856	0.179	3.25	81	1.9	-	83	-0.067	11.36	0.328
23	4.034	0.178	3.25	82	2.2	-	83	-0.067	11.13	0.174
24	4.212	0.178	3.26	82	1.7	-	83	-0.067	10.66	0.054
25	4.389	0.177	3.26	82	2.1	-	83	-0.068	10.40	0.052
26	4.569	0.180	3.26	83	1.7	-	83	-0.067	10.16	0.050
27	4.748	0.179	3.26	83	1.8	-	83	-0.066	10.31	0.060
28	4.927	0.179	3.26	83	2.1	-	84	-0.067	10.48	0.062
29	5.105	0.178	3.26	84	2.1	-	84	-0.067	10.78	0.065
30	5.283	0.178	3.26	84	2.0	101	84	-0.068	10.94	0.075
31	5.462	0.179	3.27	84	2.0	-	84	-0.066	11.25	0.194

BOX B TEST DATA - ASTM E2780 / ASTM E2515

Client: IHP
Model: I3000
Run #: 6

Job #: 23-229
Tracking #: 169
Technician: AK
Date: 12/19/2023

	Particulate Sampling Data							Flue Gas Data		
Elapsed Time (min)	Gas Meter (ft^3)	Sample Rate (cfm)	Orifice dH (in H_2O)	Meter Temp (°F)	Meter Vacuum (in Hg)	Pro. Rate (%)	Filter (°F)	Flue Draft (in H_2O)	CO_2 (%)	CO (%)
32	5.642	0.180	3.26	85	1.7	-	84	-0.066	11.33	0.243
33	5.822	0.180	3.26	85	2.1	-	84	-0.066	11.01	0.062
34	6.001	0.179	3.27	85	1.8	-	84	-0.067	10.83	0.047
35	6.179	0.178	3.28	86	2.1	-	84	-0.067	11.07	0.060
36	6.358	0.179	3.27	86	1.7	-	84	-0.065	11.32	0.085
37	6.538	0.180	3.27	86	2.1	-	84	-0.064	11.34	0.096
38	6.720	0.182	3.27	87	2.2	-	84	-0.066	11.69	0.313
39	6.899	0.179	3.27	87	2.2	-	84	-0.066	11.84	0.397
40	7.076	0.177	3.27	87	1.7	101	84	-0.068	12.10	0.375
41	7.256	0.180	3.27	88	1.7	-	84	-0.066	12.09	0.789
42	7.438	0.182	3.28	88	2.0	-	84	-0.067	12.30	0.283
43	7.619	0.181	3.28	88	1.7	-	84	-0.067	12.21	0.414
44	7.799	0.180	3.27	89	1.7	-	84	-0.067	12.07	0.373
45	7.977	0.178	3.28	89	2.1	-	84	-0.065	12.08	0.212
46	8.157	0.180	3.27	89	2.2	-	84	-0.066	12.03	0.161
47	8.338	0.181	3.28	89	1.8	-	84	-0.065	11.94	0.151
48	8.519	0.181	3.28	90	1.9	-	84	-0.068	11.89	0.112
49	8.701	0.182	3.29	90	2.2	-	84	-0.066	11.79	0.088
50	8.882	0.181	3.29	90	2.1	102	84	-0.065	11.76	0.085
51	9.060	0.178	3.29	91	2.1	-	84	-0.065	11.71	0.114
52	9.240	0.180	3.28	91	2.0	-	84	-0.067	11.91	0.104
53	9.423	0.183	3.29	91	2.0	-	84	-0.067	12.28	0.173
54	9.604	0.181	3.29	91	1.9	-	84	-0.068	12.37	0.356
55	9.785	0.181	3.28	92	2.0	-	84	-0.066	12.11	0.331
56	9.966	0.181	3.29	92	2.1	-	84	-0.064	11.62	0.245
57	10.146	0.180	3.29	92	1.8	-	84	-0.065	11.54	0.143
58	10.327	0.181	3.29	93	1.9	-	84	-0.066	11.38	0.138
59	10.510	0.183	3.30	93	2.2	-	84	-0.066	11.42	0.147
60	10.693	0.183	3.30	93	1.7	102	84	-0.064	11.39	0.131
61	10.873	0.180	3.30	93	1.9	-	84	-0.064	11.26	0.096
62	11.053	0.180	3.29	93	2.0	-	84	-0.065	11.17	0.089
63	11.235	0.182	3.30	94	1.9	-	84	-0.064	11.23	0.087

BOX B TEST DATA - ASTM E2780 / ASTM E2515

Client: IHP
Model: I3000
Run #: 6

Job #: 23-229
Tracking #: 169
Technician: AK
Date: 12/19/2023

	Particulate Sampling Data							Flue Gas Data		
Elapsed Time (min)	Gas Meter (ft^3)	Sample Rate (cfm)	Orifice dH (in H_2O)	Meter Temp (°F)	Meter Vacuum (in Hg)	Pro. Rate (%)	Filter (°F)	Flue Draft (in H_2O)	CO_2 (%)	CO (%)
64	11.416	0.181	3.29	94	1.7	-	84	-0.066	11.27	0.087
65	11.598	0.182	3.30	94	1.9	-	84	-0.062	11.19	0.085
66	11.781	0.183	3.31	94	1.7	-	84	-0.064	11.24	0.077
67	11.962	0.181	3.30	95	1.8	-	84	-0.064	11.20	0.050
68	12.143	0.181	3.30	95	2.0	-	84	-0.066	11.16	0.059
69	12.324	0.181	3.31	95	1.7	-	84	-0.063	10.97	0.041
70	12.506	0.182	3.31	95	1.7	101	84	-0.064	11.20	0.130
71	12.689	0.183	3.31	95	2.1	-	84	-0.063	11.16	0.096
72	12.873	0.184	3.31	96	2.0	-	84	-0.065	11.03	0.057
73	13.054	0.181	3.31	96	1.9	-	84	-0.063	10.77	0.034
74	13.235	0.181	3.30	96	2.2	-	84	-0.062	10.63	0.036
75	13.417	0.182	3.31	96	1.9	-	84	-0.063	10.64	0.034
76	13.598	0.181	3.31	96	2.2	-	84	-0.064	10.65	0.046
77	13.782	0.184	3.31	96	2.0	-	84	-0.062	10.64	0.038
78	13.965	0.183	3.32	97	2.1	-	84	-0.063	10.60	0.019
79	14.147	0.182	3.31	97	1.8	-	84	-0.063	10.42	0.023
80	14.329	0.182	3.31	97	1.6	101	84	-0.062	10.43	0.019
81	14.510	0.181	3.31	97	1.7	-	84	-0.063	10.59	0.021
82	14.693	0.183	3.32	97	2.0	-	84	-0.063	10.51	0.028
83	14.877	0.184	3.32	97	1.7	-	84	-0.062	10.53	0.026
84	15.060	0.183	3.32	98	1.7	-	84	-0.061	10.38	0.024
85	15.243	0.183	3.31	98	1.8	-	84	-0.064	10.39	0.033
86	15.426	0.183	3.32	98	1.7	-	84	-0.064	10.35	0.029
87	15.606	0.180	3.31	98	2.2	-	84	-0.064	10.29	0.035
88	15.790	0.184	3.32	98	1.7	-	84	-0.064	10.15	0.033
89	15.973	0.183	3.32	98	1.7	-	84	-0.061	10.03	0.042
90	16.156	0.183	3.32	98	2.0	101	84	-0.063	10.09	0.040
91	16.341	0.185	3.32	98	1.7	-	84	-0.062	9.97	0.044
92	16.523	0.182	3.32	99	1.7	-	84	-0.063	9.79	0.035
93	16.705	0.182	3.32	99	1.8	-	84	-0.065	9.87	0.034
94	16.887	0.182	3.33	99	2.0	-	84	-0.064	9.81	0.035
95	17.069	0.182	3.31	99	1.8	-	84	-0.062	9.96	0.036

BOX B TEST DATA - ASTM E2780 / ASTM E2515

Client: IHP
Model: I3000
Run #: 6

Job #: 23-229
Tracking #: 169
Technician: AK
Date: 12/19/2023

	Particulate Sampling Data							Flue Gas Data		
Elapsed Time (min)	Gas Meter (ft^3)	Sample Rate (cfm)	Orifice dH (in H_2O)	Meter Temp (°F)	Meter Vacuum (in Hg)	Pro. Rate (%)	Filter (°F)	Flue Draft (in H_2O)	CO_2 (%)	CO (%)
96	17.254	0.185	3.32	99	2.2	-	84	-0.064	10.02	0.029
97	17.438	0.184	3.32	99	2.2	-	84	-0.063	10.08	0.042
98	17.622	0.184	3.32	99	1.7	-	84	-0.062	10.13	0.034
99	17.805	0.183	3.32	99	1.7	-	84	-0.060	10.02	0.044
100	17.985	0.180	3.32	99	1.9	100	84	-0.061	10.11	0.042
101	18.169	0.184	3.32	100	1.8	-	84	-0.062	9.98	0.042
102	18.352	0.183	3.33	100	2.0	-	84	-0.062	9.98	0.038
103	18.537	0.185	3.32	100	1.7	-	84	-0.061	9.92	0.043
104	18.722	0.185	3.33	100	2.0	-	84	-0.063	9.88	0.042
105	18.904	0.182	3.33	100	1.9	-	84	-0.062	9.52	0.055
106	19.088	0.184	3.33	100	1.8	-	84	-0.062	9.61	0.046
107	19.269	0.181	3.32	100	1.9	-	84	-0.063	9.53	0.043
108	19.453	0.184	3.33	100	2.0	-	84	-0.062	9.43	0.036
109	19.638	0.185	3.34	100	1.7	-	84	-0.063	9.40	0.037
110	19.821	0.183	3.32	100	2.1	100	84	-0.062	9.40	0.036
111	20.006	0.185	3.33	100	2.0	-	84	-0.063	9.27	0.037
112	20.189	0.183	3.33	101	2.2	-	84	-0.063	9.31	0.028
113	20.372	0.183	3.33	101	2.2	-	84	-0.061	9.28	0.035
114	20.555	0.183	3.33	101	2.2	-	84	-0.062	9.28	0.040
115	20.737	0.182	3.33	101	2.1	-	84	-0.061	9.23	0.034
116	20.923	0.186	3.32	101	2.0	-	84	-0.062	9.19	0.032
117	21.107	0.184	3.33	101	2.1	-	84	-0.064	9.21	0.036
118	21.291	0.184	3.33	101	1.9	-	84	-0.063	9.17	0.035
119	21.475	0.184	3.34	101	2.0	-	84	-0.060	9.27	0.033
120	21.656	0.181	3.33	101	2.1	101	84	-0.062	9.29	0.028
121	21.840	0.184	3.33	101	2.2	-	84	-0.060	9.19	0.031
122	22.024	0.184	3.33	101	1.7	-	83	-0.060	9.15	0.033
123	22.209	0.185	3.33	101	2.1	-	83	-0.062	9.13	0.034
124	22.393	0.184	3.33	101	1.9	-	83	-0.062	9.10	0.029
125	22.577	0.184	3.33	101	2.0	-	83	-0.060	9.13	0.034
126	22.762	0.185	3.33	101	2.2	-	83	-0.060	9.05	0.033
127	22.943	0.181	3.33	101	2.0	-	83	-0.061	9.06	0.035

BOX B TEST DATA - ASTM E2780 / ASTM E2515

Client: IHP
Model: I3000
Run #: 6

Job #: 23-229
Tracking #: 169
Technician: AK
Date: 12/19/2023

	Particulate Sampling Data							Flue Gas Data		
Elapsed Time (min)	Gas Meter (ft^3)	Sample Rate (cfm)	Orifice dH (in H_2O)	Meter Temp (°F)	Meter Vacuum (in Hg)	Pro. Rate (%)	Filter (°F)	Flue Draft (in H_2O)	CO_2 (%)	CO (%)
128	23.127	0.184	3.32	102	2.2	-	83	-0.062	9.06	0.024
129	23.310	0.183	3.33	102	1.8	-	83	-0.060	9.01	0.031
130	23.495	0.185	3.33	102	1.7	101	83	-0.060	9.03	0.030
131	23.680	0.185	3.33	102	2.2	-	83	-0.060	8.93	0.028
132	23.863	0.183	3.33	102	2.2	-	83	-0.059	8.90	0.031
133	24.047	0.184	3.33	102	2.1	-	83	-0.060	8.90	0.036
134	24.230	0.183	3.33	102	2.0	-	83	-0.060	8.92	0.033
135	24.414	0.184	3.33	102	2.2	-	83	-0.060	8.97	0.033
136	24.598	0.184	3.33	102	1.7	-	83	-0.059	8.97	0.035
137	24.783	0.185	3.33	102	1.7	-	83	-0.058	9.02	0.030
138	24.968	0.185	3.33	102	2.2	-	83	-0.061	8.97	0.024
139	25.151	0.183	3.33	102	1.8	-	83	-0.060	9.09	0.033
140	25.335	0.184	3.32	102	2.0	100	83	-0.063	9.12	0.030
141	25.517	0.182	3.33	102	2.1	-	83	-0.062	9.25	0.034
142	25.701	0.184	3.33	102	1.7	-	83	-0.061	9.36	0.029
143	25.886	0.185	3.34	102	1.7	-	83	-0.061	9.43	0.026
144	26.070	0.184	3.33	102	1.9	-	83	-0.059	9.69	0.026
145	26.256	0.186	3.34	102	1.7	-	83	-0.061	9.64	0.019
146	26.439	0.183	3.33	102	1.7	-	83	-0.061	9.65	0.021
147	26.622	0.183	3.34	102	2.2	-	83	-0.060	9.46	0.025
148	26.805	0.183	3.33	102	2.2	-	83	-0.058	9.55	0.027
149	26.989	0.184	3.33	102	1.6	-	83	-0.059	9.44	0.033
150	27.174	0.185	3.34	102	2.0	100	83	-0.059	9.25	0.037
151	27.358	0.184	3.33	102	2.0	-	83	-0.059	8.94	0.033
152	27.544	0.186	3.33	102	2.1	-	83	-0.058	8.43	0.042
153	27.727	0.183	3.34	102	1.7	-	83	-0.058	8.22	0.034
154	27.911	0.184	3.33	102	2.2	-	83	-0.058	7.99	0.038
155	28.093	0.182	3.33	102	1.7	-	83	-0.059	7.88	0.035
156	28.277	0.184	3.33	102	2.1	-	83	-0.057	7.75	0.029
157	28.462	0.185	3.34	102	1.7	-	83	-0.057	7.63	0.029
158	28.646	0.184	3.33	102	1.7	-	83	-0.057	7.65	0.022
159	28.833	0.187	3.33	102	1.7	-	83	-0.058	7.65	0.021

BOX B TEST DATA - ASTM E2780 / ASTM E2515

Client: IHP
Model: I3000
Run #: 6

Job #: 23-229
Tracking #: 169
Technician: AK
Date: 12/19/2023

	Particulate Sampling Data							Flue Gas Data		
Elapsed Time (min)	Gas Meter (ft^3)	Sample Rate (cfm)	Orifice dH (in H_2O)	Meter Temp (°F)	Meter Vacuum (in Hg)	Pro. Rate (%)	Filter (°F)	Flue Draft (in H_2O)	CO_2 (%)	CO (%)
160	29.016	0.183	3.34	102	1.9	101	83	-0.054	7.57	0.021
161	29.200	0.184	3.34	102	2.2	-	83	-0.055	7.59	0.023
162	29.382	0.182	3.34	102	2.1	-	83	-0.057	7.53	0.022
163	29.567	0.185	3.33	102	1.8	-	83	-0.054	7.52	0.026
164	29.752	0.185	3.34	102	2.0	-	83	-0.056	7.42	0.024
165	29.936	0.184	3.34	102	2.2	-	83	-0.054	7.39	0.018
166	30.122	0.186	3.33	102	1.7	-	83	-0.053	7.39	0.017
167	30.305	0.183	3.33	102	2.0	-	83	-0.055	7.32	0.017
168	30.489	0.184	3.33	102	1.7	-	83	-0.053	7.37	0.015
169	30.671	0.182	3.34	102	2.0	-	83	-0.054	7.33	0.027
170	30.856	0.185	3.33	103	1.9	100	83	-0.056	7.33	0.023
171	31.041	0.185	3.33	103	1.6	-	83	-0.053	7.31	0.021
172	31.225	0.184	3.34	103	1.8	-	83	-0.054	7.26	0.025
173	31.411	0.186	3.34	103	1.7	-	83	-0.053	7.30	0.022
174	31.594	0.183	3.33	103	2.1	-	83	-0.053	7.26	0.025
175	31.778	0.184	3.33	103	1.9	-	83	-0.054	7.34	0.024
176	31.961	0.183	3.34	103	2.2	-	83	-0.052	7.30	0.030
177	32.145	0.184	3.33	103	2.1	-	83	-0.053	7.32	0.027
178	32.330	0.185	3.33	103	1.9	-	83	-0.055	7.28	0.027
179	32.514	0.184	3.34	103	1.6	-	83	-0.053	7.30	0.030
180	32.701	0.187	3.34	103	1.8	100	83	-0.054	7.31	0.033
181	32.883	0.182	3.33	103	2.2	-	83	-0.055	7.31	0.031
182	33.068	0.185	3.33	103	1.7	-	82	-0.054	7.31	0.031
183	33.251	0.183	3.34	103	2.2	-	82	-0.054	7.35	0.039
184	33.435	0.184	3.33	103	2.2	-	82	-0.054	7.39	0.032
185	33.619	0.184	3.33	103	2.2	-	82	-0.052	7.41	0.040
186	33.805	0.186	3.34	103	1.7	-	82	-0.055	7.41	0.040
187	33.990	0.185	3.34	103	1.9	-	82	-0.052	7.40	0.039
188	34.173	0.183	3.33	103	1.8	-	82	-0.051	7.51	0.041
189	34.358	0.185	3.33	103	1.8	-	82	-0.054	7.43	0.039
190	34.540	0.182	3.34	103	2.2	100	82	-0.052	7.50	0.042
191	34.725	0.185	3.33	103	1.7	-	82	-0.054	7.54	0.046

BOX B TEST DATA - ASTM E2780 / ASTM E2515

Client: IHP
Model: I3000
Run #: 6

Job #: 23-229
Tracking #: 169
Technician: AK
Date: 12/19/2023

	Particulate Sampling Data							Flue Gas Data		
Elapsed Time (min)	Gas Meter (ft^3)	Sample Rate (cfm)	Orifice dH (in H_2O)	Meter Temp (°F)	Meter Vacuum (in Hg)	Pro. Rate (%)	Filter (°F)	Flue Draft (in H_2O)	CO_2 (%)	CO (%)
192	34.909	0.184	3.33	103	2.2	-	82	-0.055	7.61	0.048
193	35.094	0.185	3.33	103	1.7	-	82	-0.053	8.13	0.046
194	35.280	0.186	3.34	103	2.0	-	82	-0.053	8.05	0.039
195	35.463	0.183	3.34	103	2.0	-	82	-0.054	8.19	0.035
196	35.648	0.185	3.33	103	1.7	-	82	-0.056	8.20	0.040
197	35.830	0.182	3.34	103	2.0	-	82	-0.055	8.24	0.041
198	36.015	0.185	3.34	103	2.2	-	82	-0.057	8.30	0.047
199	36.199	0.184	3.34	103	1.7	-	82	-0.054	8.22	0.044
200	36.384	0.185	3.34	103	1.9	100	82	-0.056	8.32	0.051
201	36.569	0.185	3.34	103	1.7	-	82	-0.054	8.20	0.052
202	36.753	0.184	3.34	103	1.8	-	82	-0.053	8.10	0.056
203	36.938	0.185	3.34	103	1.9	-	82	-0.051	7.97	0.054
204	37.120	0.182	3.33	103	1.7	-	82	-0.054	7.93	0.059
205	37.305	0.185	3.32	103	2.1	-	82	-0.055	7.88	0.050
206	37.489	0.184	3.34	103	2.0	-	82	-0.055	7.78	0.057
207	37.674	0.185	3.33	103	1.7	-	82	-0.054	7.76	0.054
208	37.859	0.185	3.33	103	1.8	-	82	-0.053	7.73	0.045
209	38.044	0.185	3.34	103	1.8	-	82	-0.053	7.68	0.048
210	38.228	0.184	3.34	103	2.0	99	82	-0.053	7.61	0.052
211	38.409	0.181	3.33	103	2.2	-	82	-0.051	7.53	0.055
212	38.594	0.185	3.33	103	1.7	-	82	-0.053	7.52	0.049
213	38.778	0.184	3.34	103	1.7	-	82	-0.055	7.49	0.048
214	38.964	0.186	3.34	103	1.7	-	82	-0.050	7.49	0.047
215	39.149	0.185	3.33	103	2.0	-	82	-0.052	7.49	0.049
216	39.334	0.185	3.34	103	1.8	-	82	-0.053	7.43	0.046
217	39.518	0.184	3.34	103	2.1	-	82	-0.053	7.35	0.050
218	39.700	0.182	3.33	103	1.7	-	82	-0.051	7.40	0.048
219	39.885	0.185	3.34	103	1.7	-	82	-0.050	7.33	0.048
220	40.069	0.184	3.33	103	2.0	99	82	-0.052	7.32	0.053
221	40.254	0.185	3.33	103	1.8	-	82	-0.053	7.30	0.046
222	40.439	0.185	3.34	103	2.2	-	82	-0.051	7.28	0.053
223	40.625	0.186	3.34	103	2.1	-	82	-0.054	7.26	0.047

BOX B TEST DATA - ASTM E2780 / ASTM E2515

Client: IHP
Model: I3000
Run #: 6

Job #: 23-229
Tracking #: 169
Technician: AK
Date: 12/19/2023

	Particulate Sampling Data							Flue Gas Data		
Elapsed Time (min)	Gas Meter (ft^3)	Sample Rate (cfm)	Orifice dH (in H_2O)	Meter Temp (°F)	Meter Vacuum (in Hg)	Pro. Rate (%)	Filter (°F)	Flue Draft (in H_2O)	CO_2 (%)	CO (%)
224	40.808	0.183	3.34	103	1.7	-	82	-0.051	7.27	0.011
225	40.991	0.183	3.34	103	2.1	-	82	-0.051	7.42	0.016
226	41.175	0.184	3.34	103	2.2	-	82	-0.050	7.34	0.015
227	41.359	0.184	3.33	103	2.0	-	81	-0.053	7.25	0.017
228	41.545	0.186	3.34	103	2.1	-	81	-0.052	7.21	0.018
229	41.729	0.184	3.34	103	2.2	-	81	-0.049	7.17	0.017
230	41.915	0.186	3.34	103	2.2	99	81	-0.051	7.09	0.011
231	42.098	0.183	3.34	103	2.2	-	81	-0.048	7.12	0.014
232	42.282	0.184	3.33	103	1.7	-	81	-0.049	7.09	0.014
233	42.465	0.183	3.34	103	1.9	-	81	-0.050	7.09	0.014
234	42.649	0.184	3.34	103	2.0	-	81	-0.049	7.07	0.014
235	42.836	0.187	3.34	103	2.0	-	81	-0.050	7.11	0.012
236	43.019	0.183	3.34	103	2.2	-	81	-0.049	7.04	0.012
237	43.205	0.186	3.33	103	1.9	-	81	-0.047	7.05	0.010
238	43.389	0.184	3.34	103	1.7	-	81	-0.049	7.02	0.013
239	43.573	0.184	3.34	103	1.8	-	81	-0.050	6.99	0.012
240	43.756	0.183	3.34	103	1.8	99	81	-0.050	7.00	0.013
241	43.940	0.184	3.34	103	2.0	-	81	-0.049	7.00	0.013
242	44.126	0.186	3.34	103	2.2	-	81	-0.046	6.96	0.016
243	44.310	0.184	3.34	103	2.2	-	81	-0.047	6.92	0.011
244	44.496	0.186	3.34	103	2.0	-	81	-0.049	7.01	0.012
245	44.680	0.184	3.34	103	2.2	-	81	-0.049	6.97	0.012
246	44.864	0.184	3.34	103	1.9	-	81	-0.048	6.98	0.009
247	45.046	0.182	3.34	102	1.7	-	80	-0.048	6.95	0.009
248	45.231	0.185	3.34	103	2.1	-	80	-0.048	6.95	0.009
249	45.416	0.185	3.34	103	1.9	-	80	-0.047	6.88	0.011
250	45.601	0.185	3.34	102	1.8	100	80	-0.049	6.97	0.014
251	45.787	0.186	3.34	102	1.9	-	80	-0.049	6.99	0.011
252	45.970	0.183	3.34	102	2.2	-	80	-0.046	6.96	0.007
253	46.155	0.185	3.34	102	2.2	-	80	-0.049	6.93	0.009
254	46.337	0.182	3.34	102	2.2	-	80	-0.047	6.99	0.006
255	46.522	0.185	3.33	102	2.2	-	80	-0.047	6.98	0.005

BOX B TEST DATA - ASTM E2780 / ASTM E2515

Client: IHP
Model: I3000
Run #: 6

Job #: 23-229
Tracking #: 169
Technician: AK
Date: 12/19/2023

	Particulate Sampling Data							Flue Gas Data		
Elapsed Time (min)	Gas Meter (ft^3)	Sample Rate (cfm)	Orifice dH (in H_2O)	Meter Temp (°F)	Meter Vacuum (in Hg)	Pro. Rate (%)	Filter (°F)	Flue Draft (in H_2O)	CO_2 (%)	CO (%)
256	46.706	0.184	3.33	102	2.2	-	80	-0.047	6.95	0.010
257	46.892	0.186	3.34	102	1.7	-	80	-0.050	6.93	0.010
258	47.077	0.185	3.34	102	1.8	-	80	-0.048	6.90	0.011
259	47.260	0.183	3.34	102	1.7	-	80	-0.047	6.91	0.011
260	47.445	0.185	3.34	102	2.1	100	80	-0.049	6.38	0.012
261	47.627	0.182	3.34	102	2.1	-	80	-0.048	6.26	0.012
262	47.812	0.185	3.34	102	1.7	-	80	-0.047	6.21	0.011
263	47.996	0.184	3.34	102	2.0	-	80	-0.048	6.15	0.011
264	48.182	0.186	3.34	102	1.7	-	80	-0.048	6.15	0.014
265	48.367	0.185	3.34	102	1.7	-	80	-0.048	6.08	0.012
266	48.551	0.184	3.34	102	1.8	-	80	-0.048	6.14	0.010
267	48.736	0.185	3.34	102	2.2	-	80	-0.046	6.13	0.010
268	48.917	0.181	3.34	102	1.6	-	80	-0.047	6.13	0.012
269	49.102	0.185	3.33	102	2.2	-	80	-0.047	6.15	0.011
270	49.287	0.185	3.34	102	2.0	99	79	-0.049	6.09	0.010
271	49.472	0.185	3.34	102	2.1	-	79	-0.047	6.15	0.009
272	49.657	0.185	3.34	102	1.7	-	79	-0.046	6.16	0.012
273	49.842	0.185	3.34	102	1.7	-	79	-0.047	6.14	0.011
274	50.026	0.184	3.35	102	2.2	-	79	-0.046	6.17	0.015
275	50.208	0.182	3.34	102	1.7	-	79	-0.046	6.20	0.014
276	50.393	0.185	3.34	102	2.1	-	79	-0.047	6.19	0.012
277	50.577	0.184	3.34	102	1.7	-	79	-0.047	6.20	0.015
278	50.762	0.185	3.34	102	2.1	-	79	-0.048	6.25	0.011
279	50.947	0.185	3.34	102	2.0	-	79	-0.046	6.25	0.013
280	51.132	0.185	3.34	102	1.7	99	79	-0.048	6.18	0.012
281	51.316	0.184	3.35	102	1.7	-	79	-0.048	6.11	0.010
282	51.498	0.182	3.34	102	1.9	-	79	-0.048	6.18	0.017
283	51.683	0.185	3.35	102	1.8	-	79	-0.046	6.15	0.014
284	51.866	0.183	3.34	102	1.6	-	79	-0.047	6.17	0.012
285	52.052	0.186	3.34	102	1.9	-	79	-0.046	6.13	0.017
286	52.237	0.185	3.35	102	1.6	-	79	-0.045	6.04	0.010
287	52.422	0.185	3.34	102	1.8	-	79	-0.044	6.11	0.011

BOX B TEST DATA - ASTM E2780 / ASTM E2515

Client: IHP
Model: I3000
Run #: 6

Job #: 23-229
Tracking #: 169
Technician: AK
Date: 12/19/2023

	Particulate Sampling Data							Flue Gas Data		
Elapsed Time (min)	Gas Meter (ft^3)	Sample Rate (cfm)	Orifice dH (in H_2O)	Meter Temp (°F)	Meter Vacuum (in Hg)	Pro. Rate (%)	Filter (°F)	Flue Draft (in H_2O)	CO_2 (%)	CO (%)
288	52.606	0.184	3.34	102	1.7	-	79	-0.047	6.08	0.011
289	52.789	0.183	3.34	102	2.2	-	79	-0.048	6.10	0.010
290	52.973	0.184	3.35	102	1.7	99	78	-0.047	5.95	0.014
291	53.156	0.183	3.34	102	1.9	-	78	-0.048	5.93	0.011
292	53.342	0.186	3.34	102	1.7	-	78	-0.047	5.91	0.012
293	53.527	0.185	3.35	101	2.1	-	78	-0.045	5.94	0.014
294	53.712	0.185	3.35	101	1.7	-	78	-0.048	5.90	0.012
295	53.895	0.183	3.34	101	1.9	-	78	-0.047	5.89	0.013
296	54.079	0.184	3.34	101	1.7	-	78	-0.047	5.92	0.014
297	54.263	0.184	3.35	101	1.7	-	78	-0.046	5.91	0.015
298	54.446	0.183	3.34	101	1.7	-	78	-0.047	5.91	0.016
299	54.633	0.187	3.35	101	2.1	-	78	-0.045	5.92	0.012
300	54.817	0.184	3.35	101	2.2	99	78	-0.049	5.95	0.011
301	55.002	0.185	3.34	101	1.7	-	78	-0.046	5.96	0.013
302	55.186	0.184	3.35	101	2.1	-	78	-0.046	5.91	0.011
303	55.369	0.183	3.34	101	1.8	-	78	-0.046	5.97	0.013
304	55.552	0.183	3.35	101	2.1	-	78	-0.044	5.92	0.015
305	55.736	0.184	3.34	101	1.7	-	78	-0.045	5.93	0.014
306	55.923	0.187	3.35	101	2.1	-	77	-0.048	5.93	0.011
307	56.106	0.183	3.34	101	2.0	-	77	-0.046	5.94	0.014
308	56.292	0.186	3.35	101	2.1	-	77	-0.046	5.89	0.015
309	56.476	0.184	3.35	101	2.1	-	77	-0.046	5.92	0.018
310	56.659	0.183	3.35	101	1.7	99	77	-0.046	5.91	0.014
311	56.842	0.183	3.35	101	1.8	-	77	-0.047	5.92	0.012
312	57.027	0.185	3.34	101	1.9	-	77	-0.045	5.91	0.014
313	57.212	0.185	3.35	101	1.9	-	77	-0.045	6.01	0.015
314	57.396	0.184	3.34	101	1.7	-	77	-0.047	6.10	0.013
315	57.582	0.186	3.34	101	2.0	-	77	-0.047	6.11	0.023
316	57.765	0.183	3.35	101	2.0	-	77	-0.046	6.12	0.029
317	57.949	0.184	3.35	101	1.8	-	77	-0.045	6.08	0.028
318	58.131	0.182	3.35	101	1.6	-	77	-0.044	6.13	0.034
319	58.316	0.185	3.34	100	2.0	-	77	-0.047	6.13	0.030

BOX B TEST DATA - ASTM E2780 / ASTM E2515

Client: IHP
Model: I3000
Run #: 6

Job #: 23-229
Tracking #: 169
Technician: AK
Date: 12/19/2023

	Particulate Sampling Data							Flue Gas Data		
Elapsed Time (min)	Gas Meter (ft^3)	Sample Rate (cfm)	Orifice dH (in H_2O)	Meter Temp (°F)	Meter Vacuum (in Hg)	Pro. Rate (%)	Filter (°F)	Flue Draft (in H_2O)	CO_2 (%)	CO (%)
320	58.501	0.185	3.35	101	1.9	99	77	-0.046	6.09	0.027
321	58.685	0.184	3.34	101	2.1	-	77	-0.046	6.07	0.028
322	58.871	0.186	3.34	100	2.0	-	77	-0.046	6.07	0.028
323	59.055	0.184	3.35	100	2.2	-	77	-0.046	6.11	0.031
324	59.238	0.183	3.35	100	1.8	-	77	-0.047	6.10	0.029
325	59.421	0.183	3.35	100	2.1	-	77	-0.047	6.12	0.034
326	59.605	0.184	3.34	100	1.9	-	77	-0.045	6.11	0.037
327	59.790	0.185	3.35	100	2.2	-	77	-0.047	6.13	0.037
328	59.974	0.184	3.34	100	1.6	-	77	-0.046	6.19	0.040
329	60.161	0.187	3.35	100	1.8	-	77	-0.047	6.22	0.037
330	60.344	0.183	3.35	100	1.9	99	77	-0.047	6.20	0.016
331	60.528	0.184	3.34	100	1.7	-	77	-0.045	6.20	0.017
332	60.710	0.182	3.35	100	2.0	-	76	-0.047	6.20	0.019
333	60.895	0.185	3.35	100	2.0	-	76	-0.043	6.22	0.017
334	61.080	0.185	3.36	100	2.0	-	76	-0.048	6.17	0.024
335	61.264	0.184	3.35	100	2.1	99	76	-0.048	6.14	0.022
Avg/Tot	61.264	0.183	3.31	98.0	1.9	100	81.7	-0.056	8.27	0.048

BOX C TEST DATA - ASTM E2780 / ASTM E2515

Client: IHP
Model: I3000
Run #: 6

Job #: 23-229
Tracking #: 169
Technician: AK
Date: 12/19/2023

	Particulate Sampling Data						
Elapsed Time (min)	Gas Meter (ft^3)	Sample Rate (cfm)	Orifice dH (in H_2O)	Meter Temp (°F)	Meter Vacuum (in Hg)	Pro. Rate (%)	Filter (°F)
0	-0.002		0.40	76	1.7		78
1	0.117	0.119	0.91	75	1.6	-	78
2	0.259	0.142	0.93	75	1.6	-	78
3	0.399	0.140	0.91	75	1.7	-	78
4	0.541	0.142	0.93	75	1.7	-	79
5	0.683	0.142	0.93	75	1.6	-	79
6	0.825	0.142	0.94	75	1.7	-	79
7	0.969	0.144	0.95	76	1.6	-	79
8	1.112	0.143	0.94	76	1.6	-	79
9	1.257	0.145	0.95	76	1.8	-	79
10	1.401	0.144	0.96	76	1.6	97	79
11	1.545	0.144	0.95	76	1.5	-	79
12	1.690	0.145	0.96	77	1.7	-	79
13	1.835	0.145	0.97	77	1.7	-	79
14	1.980	0.145	0.96	77	1.8	-	79
15	2.124	0.144	0.95	77	1.8	-	79
16	2.271	0.147	0.97	78	1.7	-	79
17	2.416	0.145	0.96	78	1.6	-	79
18	2.561	0.145	0.95	78	1.7	-	79
19	2.707	0.146	0.97	78	1.6	-	79
20	2.853	0.146	0.98	79	1.6	99	80
21	2.999	0.146	0.97	79	1.8	-	79
22	3.145	0.146	0.96	79	1.6	-	79
23	3.292	0.147	0.98	79	1.8	-	80
24	3.439	0.147	0.99	79	1.7	-	79
25	3.586	0.147	0.98	80	1.6	-	80
26	3.733	0.147	0.98	80	1.6	-	80
27	3.880	0.147	0.98	80	1.7	-	80
28	4.030	0.150	0.99	80	1.8	-	80
29	4.178	0.148	1.00	81	1.8	-	80
30	4.326	0.148	1.00	81	1.7	101	80
31	4.475	0.149	0.99	82	1.6	-	80

BOX C TEST DATA - ASTM E2780 / ASTM E2515

Client: IHP
Model: I3000
Run #: 6

Job #: 23-229
Tracking #: 169
Technician: AK
Date: 12/19/2023

	Particulate Sampling Data						
Elapsed Time (min)	Gas Meter (ft^3)	Sample Rate (cfm)	Orifice dH (in H_2O)	Meter Temp (°F)	Meter Vacuum (in Hg)	Pro. Rate (%)	Filter (°F)
32	4.623	0.148	0.99	82	1.8	-	80
33	4.772	0.149	0.99	82	1.8	-	80
34	4.921	0.149	1.00	82	1.8	-	80
35	5.072	0.151	1.01	83	1.7	-	80
36	5.221	0.149	1.01	83	1.6	-	80
37	5.371	0.150	1.01	84	1.6	-	80
38	5.520	0.149	1.01	83	1.6	-	80
39	5.670	0.150	1.00	84	1.7	-	80
40	5.820	0.150	1.00	84	1.8	102	80
41	5.970	0.150	1.00	85	1.8	-	80
42	6.120	0.150	1.00	85	1.7	-	80
43	6.271	0.151	1.01	85	1.7	-	80
44	6.422	0.151	1.02	85	1.6	-	80
45	6.573	0.151	1.02	85	1.8	-	80
46	6.725	0.152	1.02	85	1.6	-	80
47	6.875	0.150	1.02	86	1.8	-	80
48	7.027	0.152	1.02	86	1.6	-	80
49	7.178	0.151	1.02	86	1.6	-	80
50	7.329	0.151	1.02	86	1.8	103	80
51	7.481	0.152	1.02	87	1.6	-	80
52	7.632	0.151	1.02	86	1.6	-	80
53	7.784	0.152	1.02	86	1.6	-	80
54	7.935	0.151	1.02	87	1.7	-	80
55	8.087	0.152	1.02	87	1.6	-	80
56	8.239	0.152	1.02	87	1.7	-	81
57	8.391	0.152	1.02	87	1.8	-	81
58	8.543	0.152	1.02	87	1.6	-	81
59	8.695	0.152	1.02	87	1.8	-	81
60	8.847	0.152	1.02	87	1.6	104	81
Avg/Tot	8.849	0.147	0.98	81.2	1.7	101	79.6

WOODSTOVE SURFACE TEMPERATURE DATA

Client: IHP
Model: I3000
Run #: 6

Job #: 23-229
Tracking #: 169
Technician: AK
Date: 12/19/2023

Stove ΔT: 80

	Temperature Data (°F)						
Elapsed Time (min)	FB Left	FB Right	FB Back	FB Top	FB Bottom	Stove Surface Average	Catalyst Exit
0	364	390	265	390	325	346.6	650.3
1	363	390	268	386	330	347.4	593.0
2	362	388	267	384	337	347.6	576.7
3	360	387	267	387	343	348.8	659.7
4	359	385	268	389	350	350.2	752.4
5	358	383	268	397	356	352.5	819.7
6	356	381	268	405	362	354.4	823.3
7	353	378	269	414	367	356.3	813.5
8	352	376	268	415	372	356.5	785.4
9	350	373	268	421	377	357.8	765.0
10	348	371	269	423	381	358.3	759.6
11	345	368	269	422	385	357.8	764.6
12	343	365	267	417	389	356.4	774.9
13	341	363	268	425	392	357.7	785.8
14	339	360	267	430	396	358.2	795.6
15	337	358	266	432	398	358.2	805.3
16	335	355	265	433	401	358.0	816.8
17	333	353	264	435	404	357.7	828.7
18	331	351	264	436	406	357.6	837.4
19	329	349	264	444	408	358.7	844.7
20	328	347	263	445	410	358.6	850.3
21	326	346	262	453	412	359.6	856.8
22	325	344	261	454	414	359.5	876.9
23	323	342	262	464	415	361.4	891.7
24	323	341	261	470	417	362.2	893.9
25	321	340	260	477	418	363.4	891.6
26	320	338	260	484	420	364.5	888.2
27	320	337	259	491	421	365.6	886.3
28	319	336	259	499	422	366.9	887.3
29	318	335	258	502	423	367.3	889.3
30	318	334	257	503	424	367.1	890.7
31	317	333	255	518	422	368.9	894.4
32	316	332	254	523	416	368.0	896.6
33	316	331	252	530	408	367.3	894.1
34	315	330	250	535	400	366.0	899.1
35	314	329	249	538	392	364.4	901.5
36	314	328	247	541	384	362.9	899.3
37	313	328	246	545	377	361.7	901.8
38	313	327	244	549	370	360.5	902.6
39	312	326	242	551	363	358.9	904.6
40	312	326	240	556	357	358.3	907.4
41	312	325	240	557	352	357.2	906.9
42	311	325	238	563	347	356.8	906.7
43	312	325	237	564	342	356.0	906.6
44	311	325	235	570	338	355.8	905.4
45	311	324	234	573	334	355.5	900.9
46	311	324	233	574	331	354.7	900.4
47	311	325	233	578	328	354.7	899.9

WOODSTOVE SURFACE TEMPERATURE DATA

Client: IHP
Model: I3000
Run #: 6

Job #: 23-229
Tracking #: 169
Technician: AK
Date: 12/19/2023

Stove ΔT: 80

	Temperature Data (°F)						
Elapsed Time (min)	FB Left	FB Right	FB Back	FB Top	FB Bottom	Stove Surface Average	Catalyst Exit
48	311	324	231	580	325	354.1	897.6
49	310	325	230	582	322	353.7	895.3
50	311	325	228	582	320	353.1	894.3
51	311	325	227	584	317	352.9	892.5
52	311	326	227	585	315	352.7	893.0
53	311	326	226	585	313	352.1	897.4
54	311	326	225	586	311	351.8	900.0
55	311	327	224	586	310	351.4	897.3
56	311	327	223	587	308	351.2	890.7
57	311	328	222	587	307	350.9	884.0
58	311	329	221	587	305	350.6	880.3
59	311	330	221	586	303	350.2	876.1
60	311	330	221	580	302	348.9	871.7
61	311	331	220	582	301	348.8	868.8
62	311	332	219	579	299	348.0	865.8
63	312	333	218	577	298	347.5	862.6
64	311	333	218	576	297	347.0	860.5
65	311	334	217	576	295	346.7	858.4
66	312	335	217	573	294	346.0	857.0
67	311	336	217	572	293	345.7	854.8
68	311	337	217	570	292	345.2	851.3
69	312	338	216	566	290	344.5	848.1
70	311	339	216	565	289	344.2	847.0
71	312	340	216	564	288	343.8	848.5
72	312	341	215	564	287	343.8	846.1
73	312	342	216	558	286	342.6	847.3
74	312	343	216	560	285	343.1	847.0
75	312	344	215	556	284	342.0	848.8
76	312	345	215	558	282	342.4	857.5
77	312	346	214	554	281	341.4	858.4
78	312	347	214	556	281	341.6	867.5
79	312	347	214	552	280	340.8	873.3
80	312	348	214	549	279	340.2	873.9
81	312	348	214	551	278	340.6	873.6
82	312	348	214	549	277	340.1	871.3
83	312	349	214	546	277	339.5	868.0
84	312	349	213	544	276	339.0	867.7
85	313	349	214	542	276	338.6	865.7
86	313	350	214	540	276	338.5	862.6
87	313	350	214	539	275	338.3	861.1
88	314	351	214	538	275	338.0	858.9
89	314	351	214	535	274	337.5	856.9
90	314	351	214	534	274	337.2	855.7
91	315	351	215	531	273	336.9	857.0
92	315	352	214	529	273	336.6	854.3
93	315	352	214	526	272	336.0	852.0
94	316	352	215	526	272	336.0	849.8
95	317	353	214	524	271	335.8	849.5

WOODSTOVE SURFACE TEMPERATURE DATA

Client: IHP
Model: I3000
Run #: 6

Job #: 23-229
Tracking #: 169
Technician: AK
Date: 12/19/2023

Stove ΔT: 80

	Temperature Data (°F)						
Elapsed Time (min)	FB Left	FB Right	FB Back	FB Top	FB Bottom	Stove Surface Average	Catalyst Exit
96	317	353	215	522	271	335.6	853.1
97	318	354	215	519	271	335.2	855.3
98	318	354	215	521	270	335.6	860.9
99	318	354	216	520	270	335.6	863.0
100	318	354	216	520	269	335.5	864.3
101	319	355	216	516	269	335.0	865.6
102	320	355	217	513	269	334.5	864.9
103	320	355	216	513	268	334.6	862.5
104	321	355	217	517	268	335.4	861.5
105	321	355	217	517	267	335.4	860.3
106	321	355	218	514	267	334.8	857.4
107	322	355	218	514	266	335.0	855.6
108	322	355	218	513	266	334.7	854.1
109	322	356	218	511	265	334.4	852.0
110	323	356	219	511	265	334.6	848.2
111	323	356	219	510	264	334.4	845.4
112	323	356	219	507	264	333.8	842.8
113	324	356	219	504	264	333.4	840.5
114	324	356	219	505	263	333.5	838.0
115	324	356	219	505	263	333.3	834.7
116	325	356	219	503	262	333.1	830.8
117	325	357	220	502	262	332.9	828.5
118	325	357	219	500	261	332.3	828.5
119	325	357	219	498	261	331.8	827.8
120	326	357	219	497	260	331.8	825.2
121	326	356	219	494	260	330.9	822.8
122	326	356	219	494	259	330.9	821.8
123	327	356	218	492	259	330.4	824.2
124	327	356	217	492	258	330.1	825.0
125	327	356	217	492	258	330.0	824.6
126	328	356	217	490	257	329.5	824.6
127	328	356	218	489	257	329.4	824.0
128	328	356	217	486	256	328.8	823.0
129	329	356	217	485	256	328.5	821.8
130	329	356	217	485	256	328.4	821.4
131	329	356	217	484	255	328.3	819.2
132	329	355	217	483	255	327.7	816.2
133	329	355	218	478	254	326.9	815.5
134	329	355	217	481	254	327.3	818.8
135	330	355	216	478	254	326.5	822.5
136	330	355	216	474	253	325.6	823.9
137	330	355	216	480	253	326.7	823.6
138	330	355	216	480	252	326.7	822.1
139	330	355	216	479	252	326.3	820.0
140	331	354	216	478	251	326.0	823.3
141	331	354	216	478	251	325.9	825.4
142	331	354	216	478	251	325.7	827.2
143	331	354	215	478	250	325.6	825.7

WOODSTOVE SURFACE TEMPERATURE DATA

Client: IHP
Model: I3000
Run #: 6

Job #: 23-229
Tracking #: 169
Technician: AK
Date: 12/19/2023

Stove ΔT: 80

	Temperature Data (°F)						
Elapsed Time (min)	FB Left	FB Right	FB Back	FB Top	FB Bottom	Stove Surface Average	Catalyst Exit
144	331	354	215	480	250	325.8	818.7
145	331	354	215	479	249	325.6	828.4
146	331	354	215	481	249	326.0	830.8
147	331	353	216	479	249	325.5	831.6
148	331	353	215	483	248	326.0	827.8
149	332	353	215	484	248	326.3	835.3
150	332	353	216	485	248	326.7	837.0
151	332	353	215	487	247	326.7	831.6
152	332	353	216	487	247	326.8	823.3
153	332	353	216	485	247	326.4	813.9
154	332	353	215	484	246	326.1	802.6
155	332	353	215	481	246	325.2	792.3
156	332	353	215	479	246	324.9	782.3
157	332	353	215	475	245	324.0	773.3
158	332	353	215	473	245	323.4	766.0
159	332	352	215	470	245	322.7	759.8
160	332	352	215	467	244	321.9	754.5
161	332	352	214	464	244	321.3	749.1
162	331	352	214	461	244	320.4	744.7
163	331	352	215	457	244	319.6	741.2
164	331	351	214	454	243	318.7	737.7
165	330	351	214	450	243	317.6	733.9
166	330	350	214	448	243	317.2	728.6
167	330	350	214	445	243	316.4	723.3
168	330	350	214	442	242	315.6	719.8
169	329	349	214	439	242	314.7	717.5
170	329	349	214	435	242	313.9	715.1
171	329	348	214	435	242	313.6	712.6
172	329	348	214	430	242	312.5	710.9
173	328	347	214	428	242	311.7	710.0
174	328	347	214	426	242	311.3	708.2
175	327	346	214	424	242	310.6	706.7
176	327	346	214	423	242	310.3	705.5
177	326	345	214	421	241	309.6	704.6
178	326	345	214	417	241	308.7	703.8
179	326	344	214	417	241	308.3	703.3
180	326	344	213	414	241	307.6	702.9
181	325	343	213	412	240	306.7	702.4
182	325	343	213	410	240	306.3	701.8
183	324	342	213	411	240	306.1	702.1
184	324	342	213	408	240	305.2	702.7
185	324	342	213	408	239	305.0	703.2
186	323	341	213	406	239	304.3	704.4
187	322	341	213	406	239	303.9	705.7
188	322	340	213	404	238	303.3	706.3
189	321	340	212	404	238	303.1	707.5
190	321	339	212	404	238	302.8	708.0
191	320	339	212	404	237	302.6	708.7

WOODSTOVE SURFACE TEMPERATURE DATA

Client: IHP
Model: I3000
Run #: 6

Job #: 23-229
Tracking #: 169
Technician: AK
Date: 12/19/2023

Stove ΔT: 80

	Temperature Data (°F)						
Elapsed Time (min)	FB Left	FB Right	FB Back	FB Top	FB Bottom	Stove Surface Average	Catalyst Exit
192	320	338	213	404	237	302.4	711.1
193	319	338	212	402	237	301.6	714.6
194	319	337	212	403	236	301.5	719.7
195	318	337	213	405	236	301.6	721.7
196	318	337	212	405	236	301.4	723.0
197	318	336	212	404	235	301.1	723.8
198	317	335	212	406	235	301.1	726.4
199	317	335	212	406	235	300.9	726.6
200	317	334	212	407	234	300.8	727.5
201	316	334	212	408	234	300.8	728.3
202	316	334	212	408	234	300.8	727.0
203	316	333	212	409	234	300.8	724.3
204	316	333	212	409	233	300.7	720.0
205	316	333	212	410	233	300.7	717.5
206	316	333	212	408	233	300.2	713.6
207	316	332	212	407	233	300.0	709.2
208	316	332	212	408	233	300.2	707.1
209	316	332	212	407	233	299.9	703.5
210	315	331	213	407	233	300.0	700.3
211	315	331	213	404	233	299.4	697.5
212	315	331	213	405	233	299.4	694.2
213	315	331	213	404	233	299.1	693.1
214	315	331	214	403	233	299.1	690.0
215	315	331	214	399	233	298.3	687.2
216	315	331	214	401	233	298.5	686.0
217	314	330	214	398	233	297.8	683.8
218	314	330	215	398	232	297.9	681.7
219	314	330	214	398	232	297.7	679.7
220	313	330	215	395	232	297.1	677.5
221	313	330	215	395	232	296.9	676.3
222	313	330	215	394	232	296.8	673.3
223	312	330	216	392	232	296.4	672.9
224	312	330	216	391	232	296.0	672.4
225	311	330	216	390	232	295.9	666.5
226	311	330	216	388	232	295.1	659.7
227	311	329	217	386	232	294.9	653.7
228	310	329	216	385	232	294.7	649.5
229	310	329	217	382	233	294.1	647.4
230	310	329	217	382	233	294.2	643.7
231	310	329	217	381	233	293.8	640.6
232	310	329	217	377	233	293.2	637.0
233	310	329	217	376	233	293.1	634.6
234	310	328	218	375	234	293.0	632.4
235	310	329	218	373	234	292.8	630.8
236	311	328	218	373	234	292.7	628.4
237	311	328	217	372	235	292.5	627.0
238	311	328	218	370	235	292.4	626.5
239	311	328	218	368	236	292.0	626.4

WOODSTOVE SURFACE TEMPERATURE DATA

Client: IHP
Model: I3000
Run #: 6

Job #: 23-229
Tracking #: 169
Technician: AK
Date: 12/19/2023

Stove ΔT: 80

	Temperature Data (°F)						
Elapsed Time (min)	FB Left	FB Right	FB Back	FB Top	FB Bottom	Stove Surface Average	Catalyst Exit
240	311	328	218	367	236	291.9	624.6
241	311	328	218	364	237	291.5	623.9
242	311	328	218	363	237	291.4	624.1
243	311	327	218	363	238	291.3	623.1
244	311	327	218	361	238	291.1	622.6
245	311	327	219	362	239	291.3	623.2
246	311	327	218	361	239	291.1	623.7
247	311	327	218	357	239	290.4	623.1
248	311	327	218	358	240	290.5	621.7
249	311	327	218	356	240	290.4	621.8
250	311	326	218	356	240	290.4	622.9
251	311	326	218	355	241	290.1	621.5
252	311	326	218	357	241	290.5	620.6
253	310	326	219	355	241	290.1	618.7
254	310	326	218	355	242	290.0	618.1
255	310	326	218	353	242	289.5	615.4
256	309	325	218	351	243	289.2	615.7
257	309	325	218	353	243	289.8	613.8
258	309	325	218	351	244	289.3	612.2
259	309	325	217	351	244	289.1	611.5
260	309	325	218	352	245	289.4	611.4
261	309	324	218	350	245	289.0	611.0
262	309	324	218	347	245	288.5	608.4
263	308	324	218	348	246	288.8	606.2
264	308	324	218	346	247	288.5	603.6
265	308	324	218	345	247	288.2	601.9
266	307	324	218	346	247	288.4	600.3
267	307	323	218	345	248	288.3	599.1
268	306	323	218	345	248	287.9	598.6
269	306	323	218	343	248	287.6	596.5
270	306	322	218	343	249	287.6	595.0
271	305	322	218	343	249	287.3	594.3
272	305	321	217	340	249	286.4	594.1
273	304	321	217	338	249	285.8	592.6
274	303	321	217	339	249	285.9	591.8
275	303	320	217	340	249	285.8	591.2
276	303	320	217	338	249	285.2	590.4
277	302	319	217	336	249	284.6	590.0
278	302	319	216	337	249	284.4	589.1
279	301	318	216	336	248	283.9	588.5
280	300	318	216	336	248	283.8	588.9
281	300	318	216	334	248	283.2	588.2
282	300	317	216	335	248	283.0	587.1
283	299	317	216	335	248	282.9	585.0
284	298	316	215	332	248	282.1	585.6
285	298	316	215	332	248	281.8	584.8
286	298	315	216	333	248	281.8	584.0
287	297	315	215	330	248	281.0	582.5

WOODSTOVE SURFACE TEMPERATURE DATA

Client: IHP
Model: I3000
Run #: 6

Job #: 23-229
Tracking #: 169
Technician: AK
Date: 12/19/2023

Stove ΔT: 80

	Temperature Data (°F)						
Elapsed Time (min)	FB Left	FB Right	FB Back	FB Top	FB Bottom	Stove Surface Average	Catalyst Exit
288	297	314	214	331	248	280.7	582.2
289	296	314	215	329	248	280.3	581.3
290	296	313	214	330	248	280.3	579.6
291	295	313	214	327	248	279.4	579.9
292	295	312	214	329	248	279.5	578.5
293	294	312	214	326	247	278.6	577.6
294	294	311	214	327	247	278.6	577.7
295	293	311	214	326	247	278.2	575.5
296	293	310	214	323	247	277.5	574.5
297	293	310	214	325	247	277.6	575.3
298	292	309	213	324	247	277.0	574.1
299	292	308	213	323	247	276.6	574.1
300	292	308	213	322	247	276.1	574.8
301	291	307	212	322	246	275.7	575.5
302	290	306	212	322	246	275.4	574.4
303	290	306	212	323	246	275.2	573.9
304	290	305	212	322	246	274.9	572.3
305	289	304	212	321	245	274.3	572.3
306	289	304	212	321	245	274.0	573.5
307	289	303	211	319	245	273.4	574.2
308	288	303	211	319	245	273.1	575.2
309	288	302	211	320	244	273.1	573.6
310	288	302	211	319	244	272.7	574.7
311	287	301	211	319	244	272.3	574.4
312	287	301	211	319	243	272.1	574.5
313	287	300	210	319	243	271.8	574.3
314	286	300	210	319	243	271.6	574.2
315	286	299	210	318	243	271.3	575.2
316	286	299	210	318	242	271.0	576.1
317	285	298	210	318	242	270.6	577.7
318	285	298	210	318	242	270.3	579.5
319	285	297	209	318	241	269.9	580.2
320	284	296	210	319	241	269.9	582.4
321	284	295	209	319	241	269.7	582.2
322	284	295	209	319	240	269.3	584.1
323	284	294	209	318	240	268.9	581.6
324	283	294	209	319	240	269.1	582.3
325	283	294	209	319	239	268.8	583.3
326	282	293	209	319	239	268.4	583.1
327	282	293	209	319	239	268.3	583.3
328	282	292	209	318	239	267.8	584.3
329	281	292	209	321	238	268.2	584.7
330	281	291	209	319	238	267.5	584.5
331	281	291	209	319	237	267.3	581.6
332	280	291	209	319	237	267.0	579.0
333	280	290	209	319	237	266.8	576.1
334	280	290	209	318	236	266.4	573.1
335	279	290	209	318	236	266.3	571.2

WOODSTOVE SURFACE TEMPERATURE DATA

Client: IHP
Model: I3000
Run #: 6

Job #: 23-229
Tracking #: 169
Technician: AK
Date: 12/19/2023

Stove ΔT: 80

	Temperature Data (°F)						
Elapsed Time (min)	FB Left	FB Right	FB Back	FB Top	FB Bottom	Stove Surface Average	Catalyst Exit
Average	314.7	335.3	221.2	435.1	271.1	315.5	736.5

LAB SAMPLE DATA - ASTM E2515

Client: IHP
Model: I3000
Run #: 6

Job #: 23-229
Tracking #: 169
Technician: AK
Date: 12/19/2023

		Sample ID	Tare, mg	Final, mg	Catch, mg
Filters	**A**	G00791	230.6	235.0	4.4
	B	G00792	231.8	236.2	4.4
	C - 1st Hour	G00793	232.0	233.7	1.7
	Amb	G00794	232.0	232.0	0.0
Probes	**A**	12A	116705.9	116706.3	0.4
	B	12B	117771.8	117772.4	0.6
	C - 1st Hour	12C	117171.7	117172.0	0.3
O-rings	**A**	12A	3585.9	3586.3	0.4
	B	12B	3550.4	3550.8	0.4
	C - 1st Hour	12C	3616.1	3616.2	0.1

Placed in Dessicator on:	12/19/2023

Balance Audit (mg):		200.0		200.0				
		Weight (mg)	Date/Time	Weight (mg)	Date/Time	Weight (mg)	Date/Time	Weight (mg)	Date/Time
Filters	**A**	234.9	12/22 8:00	235.0	12/27 9:30				
	B	236.2	12/22 8:00	236.2	12/27 9:30				
	C - 1st Hour	233.6	12/22 8:00	233.7	12/27 9:30				
	Amb	232.1	12/22 8:00	232.0	12/27 9:30				
Probes	**A**	116706.3	12/22 8:00	116706.3	12/27 9:30				
	B	117772.6	12/22 8:00	117772.4	12/27 9:30				
	C - 1st Hour	117172.1	12/22 8:00	117172.0	12/27 9:30				
O-Rings	**A**	3586.2	12/22 8:00	3586.3	12/27 9:30				
	B	3550.9	12/22 8:00	3550.8	12/27 9:30				
	C - 1st Hour	3616.3	12/22 8:00	3616.2	12/27 9:30				

Train A Aggregate, mg:	**5.2**
Train B Aggregate, mg:	**5.4**
Train C Aggregate, mg:	**2.1**
Ambient, mg:	**0.0**

ASTM E2780 Wood Heater Run Sheets

Client: FPI Job Number: 23-229 Tracking #: 169
Model: I3000 Run Number: 6 Test Date: 12/19/23

Wood Heater Run Notes

Test Control Settings

Primary Air Setting(s): Open 0.232”
Targeted Burn Category: II

Preburn Notes

Time	Notes
	-None-

Test Notes

Test Burn Start Time: 12:59 Test Fuel Loaded by: 20 seconds
Door Closed: 30 seconds Air Control Set at: 300 seconds
Other Loading Notes: Bypass open while door open, fan set to low @ 30 min

Time	Notes
	-None-

Test Burn End Time: 18:34

Flue Gas Concentration Measurement

Calibration Gas Values: Span Gas CO_2 (%): 16.98 CO (%): 4.30
Mid Gas CO_2 (%): 10.00 CO (%): 2.51

Calibration Results:

	Pre Test			Post Test		
	Zero	Span	Mid	Zero	Span	Mid
Time	12/19 12:30	12/19 12:31	12/19 12:32	12/20 10:38	12/20 10:39	12/20 10:40
CO_2	0.02	16.98	10.07	-0.08	16.97	10.07
CO	0.008	4.331	2.545	-0.009	4.325	2.534

Flue Gas Probe Leak Check: Initial: No Leakage Final: No Leakage

Technician Signature: Date: 12/20/23

ASTM E2780 Wood Heater Run Sheets

Client: FPI Job Number: 23-229 Tracking #: 169
Model: I3000 Run Number: 6 Test Date: 12/19/23

Test Fuel Front/Side View

Test Fuel Iso View

Test Fuel Loaded in Stove

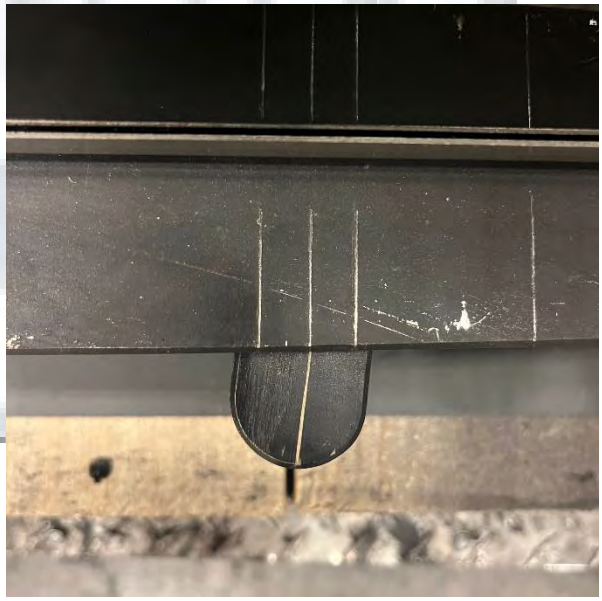

Air Setting

Technician Signature: Date: 12/20/23

WOOD STOVE TEST DATA PACKET
ASTM E2780/E2515

Run 7 Data Summary

Client:	IHP
Model:	I3000
Job #:	23-229
Tracking #:	169
Test Date:	12/20/2023

Techician Signature

1/29/2024
Date

TEST RESULTS - ASTM E2780 / ASTM E2515

Client: IHP
Model: I3000
Run #: 7

Job #: 23-229
Tracking #: 169
Technician: AK
Date: 12/20/2023

Burn Rate (kg/hr):	2.44

	Ambient Sample	Sample Train A	Sample Train B	1st Hour Filter
Total Sample Volume (ft^3)	18.527	32.375	30.891	8.744
Average Gas Velocity in Dilution Tunnel (ft/sec)	19.6			
Average Gas Flow Rate in Dilution Tunnel (dscf/hr)	12507.8			
Average Gas Meter Temperature (°F)	70.1	90.5	90.6	79.1
Total Sample Volume (dscf)	18.409	31.275	29.817	8.632
Average Tunnel Temperature (°F)	108.8			
Total Time of Test (min)	172			
Total Particulate Catch (mg)	0.1	2.6	2.6	2.6
Particulate Concentration, dry-standard (g/dscf)	0.0000054	0.0000831	0.0000872	0.0003012
Total PM Emissions (g)	0.19	2.79	2.93	3.70
Particulate Emission Rate (g/hr)	0.07	0.97	1.02	3.70
Emissions Factor (g/kg)	-	0.40	0.42	-
Difference from Average Total Particulate Emissions (g)	-	0.07	0.07	-
Difference from Average Total Particulate Emissions (%)	-	2.5%	2.5%	
Difference from Average Emissions Factor (g/kg)	-	0.01	0.01	-

Final Average Results	
Total Particulate Emissions (g)	2.86
Particulate Emission Rate (g/hr)	1.00
Emissions Factor (g/kg)	0.41
HHV Efficiency (%)	73.2%
LHV Efficiency (%)	79.1%
CO Emissions (g/min)	1.21

Quality Checks	Requirement	Observed	Result
Dual Train Precision	Each train within 7.5% of average emissions (in grams), or emission factors within 0.5 g/kg	See Above	OK
Filter Temps	<90 °F	86.8	OK
Face Velocity	< 30 ft/min	10.5	OK
Leakage Rate	Less than 4% of average sample rate	0.001 cfm	OK
Ambient Temp	55-90 °F	Min:65.6/Max:72.2	OK
Negative Probe Weight Evaluation	<5% of Total Catch	Probe Catch Not Negative	OK
Pro-Rate Variation	90% of readings between 90-110%; none greater than 120% or less than 80%	See Data Tabs	OK
Stove Surface ΔT	<126°F	25.2	OK

B415.1 Efficiency Results

Manufacturer:	IHP
Model:	I3000
Date:	12/20/23
Run:	7
Control #:	23-229
Test Duration:	172
Output Category:	4

Test Results in Accordance with CSA B415.1-09

	HHV Basis	LHV Basis
Overall Efficiency	73.2%	79.1%
Combustion Efficiency	98.0%	98.0%
Heat Transfer Efficiency	74.7%	80.7%

Output Rate (kJ/h)	34,951	33,155	**(Btu/h)**
Burn Rate (kg/h)	2.41	5.31	**(lb/h)**
Input (kJ/h)	47,751	45,297	**(Btu/h)**

Test Load Weight (dry kg)	6.91	15.23	**dry lb**
MC wet (%)	19.04		
MC dry (%)	23.51		
Particulate (g)	2.86		
CO (g)	209		
Test Duration (h)	2.87		

Emissions	Particulate	CO
g/MJ Output	0.03	2.08
g/kg Dry Fuel	0.41	30.23
g/h	1.00	72.87
g/min	0.02	1.21
lb/MM Btu Output	0.07	4.85

Air/Fuel Ratio (A/F)	12.33

VERSION: **2.4** **4/15/2010**

WOODSTOVE FUEL DATA - ASTM E2780

Client: IHP
Model: I3000
Run #: 7

Job #: 23-229
Tracking #: 169
Technician: AK
Date: 12/20/2023

Preburn Fuel Information						
Size	Length (in)	Moisture Content (% DB)		Size	Length (in)	Moisture Content (% DB)
2x4	17.00	21.1		2x4	20.00	20.2
2x4	17.00	20.1				
2x4	17.00	24.2				
2x4	17.00	23.4				
2x4	17.00	22.6				
2x4	17.00	24.4				
2x4	20.00	24.9				
2x4	20.00	21.7				
Total Fuel Weight (lbs):		18.52		Average Moisture (%DB):		22.5

Firebox Volume (ft^3):	2.75
Total 2x4 Crib Weight, with spacers (lbs):	10.38
Total 4x4 Crib Weight, with spacers (lbs):	8.53
Total Wet Fuel Weight, with spacers (lbs):	18.91

Coal Bed Range (20-25%):
Min (lbs): 3.78
Max (lbs): 4.73

Test Fuel Information						
Size	Length (in)	Weight (lbs)	Moisture Content (%DB)			Dry Weight (lbs)
4x4	17.00	3.88	23.1	23.3	23.7	3.15
4x4	18.50	4.23	21.1	24.9	23.5	3.43
2x4	17.00	1.83	23.6	24.3	24.9	1.47
2x4	18.50	2.27	23.8	24.3	24.4	1.83
2x4	20.00	2.40	22.6	22.3	24.7	1.95
2x4	20.00	2.47	22.2	22.7	23.8	2.01
					Total Dry Weight, no spacers (lbs):	13.84
					Total Dry Weight, with spacers (lbs):	15.41

Spacer Moisture Readings (%DB)							
13.6	18.2	16.1					
14.8	15.3	15.4					
17.1	14.3						
18.1	19.8						
14.6	16.2						
17.9	18.7						
15.9	12.8						
18.4	17.1						

Quality Checks	Requirement	Observed	Result
Fuel Density	25 - 36 (lbs/ft^3, DB)	28.8	OK
Loading Density	6.3 - 7.7 (lbs/ft^3, WB)	6.88	OK
2x4 Fuel Mix	35 - 65 % of total weight	55%	OK

DILUTION TUNNEL & MISC. DATA - ASTM E2780 / E2515

Client:	IHP	Job #:	23-229
Model:	I3000	Tracking #:	169
Run #:	7	Technician:	AK
Test Start Time:	12:05	Date:	12/20/2023

Total Sampling Time (min):	172	
Recording Interval (min):	1	
Meter Box γ Factor:	1.004	(A)
Meter Box γ Factor:	1.004	(B)
Meter Box γ Factor:	1.011	(C)
Meter Box γ Factor:	1.003	(Ambient)
Induced Draft Check (in. H_2O):	0	
Smoke Capture Check (%):	100%	
Date Flue Pipe Last Cleaned:	11/13/2023	
Test Fuel Scale Audit (lbs)	10.00	
Platform Scale Audit (lbs)	10.0	

	Pre-Test	Post Test	Avg.
Barometric Pressure (in. Hg)	29.77	29.77	29.77
Relative Humidity (%)	28.8	29.2	
Room Air Velocity (ft/min)	<50	<50	
Pitot Tube Leak Check	0	0	
Ambient Sample Volume:		18.527	ft^3

Sample Train Leak Checks

	Pre-test	Post-test			
(A)	0.000	0.000	cfm @	-5	in. Hg
(B)	0.000	0.000	cfm @	-5	in. Hg
(C)	0.000	0.000	cfm @	-5	in. Hg
(Ambient)	0.000	0.001	cfm @	-11	in. Hg

DILUTION TUNNEL FLOW

Traverse Data

Point	dP (in H_2O)	Temp (°F)
1	0.080	101
2	0.092	101
3	0.094	101
4	0.076	101
5	0.074	101
6	0.092	101
7	0.092	101
8	0.070	101
Center	0.090	101

Dilution Tunnel H_2O:	2.00	percent
Tunnel Diameter:	6	inches
Pitot Tube Cp:	0.99	[unitless]
Dilution Tunnel MW(dry):	29.00	lb/lb-mole
Dilution Tunnel MW(wet):	28.78	lb/lb-mole
Tunnel Area:	0.1963	ft^2
V_{strav}:	19.79	ft/sec
V_{scent}:	20.55	ft/sec
F_p:	0.963	[ratio]
Initial Tunnel Flow:	213.9	scf/min

Static Pressure: -0.160 in. H_2O

TEST FUEL PROPERTIES

Fuel Load Configuration

Firebox Front

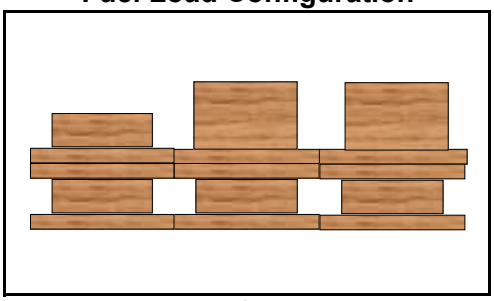

Firebox Back

Firebox Side View

Actual Fuel Used Properties

Fuel Type:	D. Fir
HHV (kJ/kg)	19,810
%C	48.73
%H	6.87
%O	43.9
%Ash	0.5
MC (%DB)	23.5

WOODSTOVE PREBURN DATA - ASTM E2780

Client: IHP
Model: I3000
Run #: 7

Job #: 23-229
Tracking #: 169
Technician: AK
Date: 12/20/2023

Recording Interval (min): 1
Run Time (min): 139

			Temperatures (°F)							
Elapsed Time (min)	Scale Reading (lbs)	Flue Draft (in H_2O)	FB Left	FB Right	FB Back	FB Top	FB Bottom	Stove Surface Average	Flue	Ambient
0	21.42	-0.079	405	434	286	642	348	423.0	519	69
1	21.31	-0.080	406	434	286	641	348	422.9	450	69
2	21.17	-0.081	406	434	287	632	343	420.5	443	69
3	21.04	-0.082	407	433	287	620	338	417.0	448	69
4	20.93	-0.080	407	432	287	614	331	414.1	450	69
5	20.83	-0.079	406	430	286	605	325	410.3	445	69
6	20.73	-0.080	404	428	284	597	319	406.5	442	69
7	20.63	-0.080	403	426	283	588	313	402.6	439	69
8	20.46	-0.080	400	422	282	579	308	398.1	441	68
9	20.29	-0.082	397	419	280	574	303	394.5	445	69
10	20.13	-0.083	394	415	278	573	299	391.6	453	68
11	19.96	-0.083	390	412	275	577	295	389.7	456	69
12	19.76	-0.084	387	408	274	582	291	388.3	460	68
13	19.56	-0.086	383	405	272	591	287	387.5	466	68
14	19.35	-0.086	379	403	269	601	284	387.3	473	69
15	19.15	-0.086	376	399	267	610	281	386.5	478	68
16	18.94	-0.085	372	397	264	621	278	386.1	480	69
17	18.75	-0.085	369	394	262	626	275	385.0	481	68
18	18.55	-0.085	365	391	260	632	272	383.9	479	69
19	18.35	-0.085	362	388	258	638	270	383.2	478	69
20	18.15	-0.085	359	386	255	638	268	381.1	479	68
21	17.94	-0.086	356	383	252	641	265	379.7	480	68
22	17.73	-0.085	353	382	251	646	264	379.2	483	68
23	17.53	-0.086	351	379	249	649	262	378.0	485	69
24	17.31	-0.085	348	377	247	656	261	377.8	486	69
25	17.10	-0.086	346	376	245	660	259	377.2	488	68
26	16.90	-0.085	344	374	243	666	258	376.9	488	69
27	16.69	-0.085	342	372	242	670	257	376.6	490	69
28	16.47	-0.085	340	371	240	674	256	376.2	488	68
29	16.27	-0.084	339	370	239	676	255	375.5	486	68
30	16.07	-0.085	338	368	237	677	254	374.9	480	69
31	15.87	-0.084	336	367	236	675	254	373.5	475	68
32	15.68	-0.084	335	366	234	670	253	371.7	469	69
33	15.49	-0.084	334	365	233	665	253	370.0	466	69
34	15.32	-0.084	334	365	232	660	252	368.3	463	69
35	15.12	-0.083	333	364	230	654	251	366.5	461	68
36	14.95	-0.084	333	364	229	650	251	365.3	461	69
37	14.76	-0.085	332	363	229	644	250	363.7	462	69
38	14.57	-0.084	332	363	228	640	250	362.4	461	69
39	14.39	-0.083	332	362	227	638	249	361.6	460	69
40	14.22	-0.080	332	362	226	634	249	360.4	460	69
41	14.03	-0.085	332	362	226	632	248	359.9	462	69
42	13.86	-0.083	332	361	225	631	247	359.2	461	69
43	13.69	-0.084	331	361	225	628	247	358.5	459	69
44	13.52	-0.082	331	361	224	626	246	357.7	459	69

WOODSTOVE PREBURN DATA - ASTM E2780

Client: IHP
Model: I3000
Run #: 7

Job #: 23-229
Tracking #: 169
Technician: AK
Date: 12/20/2023

Recording Interval (min): 1
Run Time (min): 139

			Temperatures (°F)							
Elapsed Time (min)	Scale Reading (lbs)	Flue Draft (in H_2O)	FB Left	FB Right	FB Back	FB Top	FB Bottom	Stove Surface Average	Flue	Ambient
45	13.34	-0.083	332	361	224	626	246	357.6	458	69
46	13.17	-0.083	332	361	224	623	246	357.1	460	69
47	12.99	-0.084	332	361	224	624	245	357.1	460	69
48	12.81	-0.083	332	361	224	624	245	356.9	463	69
49	12.60	-0.085	332	361	223	625	244	357.1	467	69
50	12.41	-0.085	332	362	223	629	244	358.1	469	69
51	12.23	-0.084	333	362	223	633	243	358.8	469	69
52	12.03	-0.084	334	363	223	634	243	359.3	469	69
53	11.85	-0.086	334	363	223	639	242	360.4	470	69
54	11.68	-0.085	334	364	223	639	242	360.4	470	69
55	11.47	-0.084	335	365	223	644	241	361.4	473	69
56	11.30	-0.084	336	365	223	647	240	362.3	475	69
57	11.10	-0.085	336	366	224	650	239	363.1	476	69
58	10.91	-0.084	337	368	223	654	239	364.0	479	69
59	10.71	-0.084	338	369	224	649	238	363.4	483	70
60	10.52	-0.085	339	370	224	660	237	365.9	484	69
61	10.32	-0.085	339	371	224	662	237	366.5	483	70
62	10.14	-0.083	340	373	224	665	236	367.5	485	70
63	9.92	-0.085	342	375	223	666	236	368.2	487	70
64	9.71	-0.084	342	376	224	669	235	369.5	489	69
65	9.50	-0.085	343	378	224	674	235	371.0	490	67
66	9.30	-0.087	345	380	224	675	235	371.7	490	66
67	9.08	-0.084	346	382	224	675	234	372.2	492	66
68	8.88	-0.085	346	384	224	686	234	374.6	493	65
69	8.68	-0.085	347	386	225	689	234	376.1	492	65
70	8.49	-0.084	348	387	225	691	233	377.0	487	65
71	8.33	-0.084	350	389	225	696	233	378.6	485	65
72	8.16	-0.085	351	392	226	698	233	379.9	483	64
73	8.03	-0.084	353	394	225	698	232	380.4	480	65
74	7.89	-0.081	355	396	227	696	232	381.1	476	66
75	7.77	-0.081	356	398	227	696	231	381.4	473	67
76	7.63	-0.080	358	400	227	693	230	381.5	471	67
77	7.51	-0.079	359	401	228	691	230	381.8	468	68
78	7.41	-0.079	359	403	228	686	229	381.2	466	68
79	7.29	-0.078	361	405	229	685	229	381.7	463	69
80	7.19	-0.080	362	407	230	682	229	381.9	460	69
81	7.09	-0.077	363	408	230	678	229	381.6	457	69
82	6.99	-0.078	364	410	231	675	229	381.8	455	69
83	6.90	-0.078	365	411	232	671	229	381.6	454	69
84	6.83	-0.076	366	412	233	665	229	381.0	452	69
85	6.72	-0.075	367	413	233	662	229	380.6	449	69
86	6.65	-0.077	368	414	234	657	229	380.3	445	70
87	6.58	-0.076	369	414	235	653	229	380.0	444	69
88	6.51	-0.075	370	415	235	648	229	379.5	442	70
89	6.42	-0.076	371	416	236	644	230	379.1	440	69

WOODSTOVE PREBURN DATA - ASTM E2780

Client: IHP
Model: I3000
Run #: 7

Job #: 23-229
Tracking #: 169
Technician: AK
Date: 12/20/2023

Recording Interval (min): 1
Run Time (min): 139

			Temperatures (°F)							
Elapsed Time (min)	Scale Reading (lbs)	Flue Draft (in H_2O)	FB Left	FB Right	FB Back	FB Top	FB Bottom	Stove Surface Average	Flue	Ambient
90	6.34	-0.075	371	417	237	637	230	378.4	437	70
91	6.29	-0.076	372	417	238	633	231	378.0	438	70
92	6.23	-0.074	372	418	239	629	231	377.9	436	70
93	6.16	-0.075	373	419	240	624	232	377.3	435	70
94	6.10	-0.073	373	419	240	620	232	376.8	433	70
95	6.05	-0.075	374	420	242	615	233	376.8	430	70
96	5.99	-0.076	374	421	243	611	234	376.6	427	70
97	5.93	-0.074	376	421	243	599	235	374.8	424	69
98	5.88	-0.073	376	422	245	600	236	375.8	422	69
99	5.83	-0.073	378	423	245	593	237	375.1	418	70
100	5.77	-0.072	379	423	246	587	238	374.6	416	70
101	5.73	-0.072	380	424	247	583	239	374.6	415	70
102	5.68	-0.072	382	424	248	575	240	373.8	411	70
103	5.64	-0.071	383	425	249	570	242	373.6	409	70
104	5.59	-0.070	384	425	251	564	243	373.3	407	71
105	5.55	-0.070	385	426	252	558	244	372.9	407	70
106	5.50	-0.070	386	427	253	554	245	373.0	404	70
107	5.46	-0.070	387	427	255	550	247	373.0	404	70
108	5.41	-0.069	389	428	256	546	248	373.1	402	71
109	5.36	-0.070	390	428	257	541	249	372.8	401	71
110	5.32	-0.068	391	429	258	536	251	373.0	401	71
111	5.28	-0.070	392	429	259	532	252	372.8	400	71
112	5.25	-0.069	393	429	261	529	253	373.1	398	71
113	5.19	-0.069	395	430	262	526	255	373.5	398	71
114	5.16	-0.069	395	430	262	523	256	373.3	398	71
115	5.11	-0.068	397	431	264	520	257	373.6	397	71
116	5.09	-0.069	397	431	265	517	258	373.7	397	71
117	5.03	-0.067	398	431	265	516	260	374.0	396	71
118	4.99	-0.068	399	431	267	513	261	374.1	395	71
119	4.94	-0.069	400	431	267	511	262	374.2	396	70
120	4.89	-0.070	400	431	268	509	264	374.1	396	68
121	4.84	-0.070	401	431	268	508	265	374.5	395	67
122	4.79	-0.071	401	431	269	501	266	373.7	394	66
123	4.76	-0.069	403	431	269	498	267	373.5	393	67
124	4.73	-0.068	403	431	269	500	268	374.4	391	68
125	4.68	-0.069	404	431	270	495	269	373.6	390	69
126	4.64	-0.068	405	431	271	498	270	374.7	391	69
127	4.60	-0.067	405	431	271	496	271	374.7	390	69
128	4.56	-0.068	405	431	272	497	272	375.1	389	69
129	4.51	-0.070	405	430	272	496	273	375.3	389	69
130	4.48	-0.068	406	430	272	493	274	375.0	388	70
131	4.44	-0.066	406	430	273	493	275	375.5	389	70
132	4.40	-0.067	406	430	273	490	276	375.2	389	70
133	4.35	-0.068	406	430	273	491	277	375.5	389	70
134	4.31	-0.067	406	430	274	489	279	375.5	388	70

WOODSTOVE PREBURN DATA - ASTM E2780

Client: IHP
Model: I3000
Run #: 7

Job #: 23-229
Tracking #: 169
Technician: AK
Date: 12/20/2023

Recording Interval (min): 1
Run Time (min): 139

			Temperatures (°F)							
Elapsed Time (min)	Scale Reading (lbs)	Flue Draft (in H_2O)	FB Left	FB Right	FB Back	FB Top	FB Bottom	Stove Surface Average	Flue	Ambient
135	4.27	-0.067	406	429	274	489	280	375.6	387	70
136	4.23	-0.068	407	429	275	488	281	375.9	387	70
137	4.20	-0.067	406	429	275	486	281	375.5	385	70
138	4.15	-0.067	407	429	275	484	282	375.5	385	70
139	4.11	-0.067	406	428	275	482	283	374.9	385	70

BOX A TEST DATA - ASTM E2780 / ASTM E2515

Client: IHP
Model: I3000
Run #: 7

Job #: 23-229
Tracking #: 169
Technician: AK
Date: 12/20/2023

	Particulate Sampling Data							Fuel Weight (lb)		Temperature Data (°F)			
Elapsed Time (min)	Gas Meter (ft^3)	Sample Rate (cfm)	Dilution Tunnel dP (in H_2O)	Orifice dH (in H_2O)	Meter Temp (°F)	Meter Vacuum (in Hg)	Pro. Rate (%)	Scale Reading	Weight Change	Dilution Tunnel	Flue	Filter	Ambient
0	0.000		0.086	0.16	74	0.4		18.81		113	420	73	71
1	0.128	0.128	0.085	3.07	74	1.1	-	18.75	-0.06	120	422	76	71
2	0.301	0.173	0.087	3.12	74	1.2	-	18.59	-0.16	109	387	76	71
3	0.478	0.177	0.087	3.15	74	1.2	-	18.43	-0.16	108	397	77	71
4	0.653	0.175	0.085	3.16	74	1.1	-	18.27	-0.16	109	417	77	71
5	0.826	0.173	0.088	3.18	74	1.2	-	18.08	-0.19	110	434	77	71
6	1.001	0.175	0.086	3.19	74	1.2	-	17.90	-0.18	110	443	78	71
7	1.179	0.178	0.087	3.20	74	1.2	-	17.70	-0.20	111	449	78	70
8	1.357	0.178	0.086	3.22	74	1.2	-	17.52	-0.18	112	452	79	71
9	1.532	0.175	0.085	3.23	74	1.2	-	17.28	-0.24	112	458	79	71
10	1.709	0.177	0.085	3.25	74	1.2	95	17.05	-0.23	114	468	80	71
11	1.889	0.180	0.085	3.27	75	1.2	-	16.81	-0.24	115	476	80	71
12	2.070	0.181	0.087	3.29	75	1.2	-	16.58	-0.23	115	478	80	71
13	2.249	0.179	0.085	3.30	75	1.2	-	16.37	-0.21	115	480	81	71
14	2.426	0.177	0.087	3.31	75	1.2	-	16.15	-0.22	115	482	81	71
15	2.605	0.179	0.088	3.33	76	1.2	-	15.93	-0.22	115	482	81	71
16	2.786	0.181	0.087	3.34	76	1.2	-	15.70	-0.23	115	484	81	71
17	2.970	0.184	0.087	3.35	76	1.2	-	15.48	-0.22	116	485	82	71
18	3.151	0.181	0.086	3.37	76	1.3	-	15.25	-0.23	116	486	82	71
19	3.329	0.178	0.088	3.36	77	1.2	-	15.01	-0.24	116	489	82	71
20	3.510	0.181	0.085	3.37	77	1.2	100	14.77	-0.24	117	491	82	71
21	3.693	0.183	0.085	3.39	77	1.3	-	14.50	-0.27	118	496	82	71
22	3.876	0.183	0.086	3.39	78	1.2	-	14.22	-0.28	118	502	83	71
23	4.059	0.183	0.085	3.39	78	1.2	-	13.97	-0.25	119	505	83	71
24	4.242	0.183	0.086	3.41	78	1.2	-	13.72	-0.25	118	505	83	71
25	4.423	0.181	0.086	3.42	79	1.2	-	13.47	-0.25	118	503	83	71
26	4.605	0.182	0.087	3.42	79	1.2	-	13.24	-0.23	119	504	83	71
27	4.790	0.185	0.085	3.45	79	1.2	-	13.01	-0.23	118	503	83	71
28	4.975	0.185	0.085	3.44	80	1.2	-	12.76	-0.25	119	501	84	71
29	5.158	0.183	0.087	3.44	80	1.2	-	12.52	-0.24	118	503	84	71
30	5.342	0.184	0.086	3.45	80	1.3	101	12.28	-0.24	118	504	84	71
31	5.524	0.182	0.086	3.44	81	1.3	-	12.04	-0.24	119	504	84	72

BOX A TEST DATA - ASTM E2780 / ASTM E2515

Client: IHP
Model: I3000
Run #: 7

Job #: 23-229
Tracking #: 169
Technician: AK
Date: 12/20/2023

	Particulate Sampling Data							Fuel Weight (lb)		Temperature Data (°F)			
Elapsed Time (min)	Gas Meter (ft^3)	Sample Rate (cfm)	Dilution Tunnel dP (in H_2O)	Orifice dH (in H_2O)	Meter Temp (°F)	Meter Vacuum (in Hg)	Pro. Rate (%)	Scale Reading	Weight Change	Dilution Tunnel	Flue	Filter	Ambient
32	5.707	0.183	0.085	3.45	81	1.3	-	11.79	-0.25	119	504	84	71
33	5.894	0.187	0.089	3.46	81	1.2	-	11.56	-0.23	119	505	84	71
34	6.079	0.185	0.086	3.47	82	1.3	-	11.33	-0.23	119	505	84	71
35	6.265	0.186	0.085	3.47	82	1.2	-	11.08	-0.25	119	504	85	72
36	6.450	0.185	0.085	3.46	83	1.3	-	10.85	-0.23	119	505	84	71
37	6.633	0.183	0.085	3.48	83	1.3	-	10.61	-0.24	119	505	85	72
38	6.818	0.185	0.087	3.47	83	1.2	-	10.38	-0.23	118	502	85	72
39	6.999	0.181	0.085	3.46	84	1.3	-	10.16	-0.22	118	500	85	72
40	7.189	0.190	0.085	3.49	84	1.3	101	9.95	-0.21	118	500	85	72
41	7.375	0.186	0.084	3.48	84	1.3	-	9.74	-0.21	118	502	85	72
42	7.562	0.187	0.086	3.49	85	1.3	-	9.53	-0.21	118	500	85	72
43	7.748	0.186	0.089	3.49	85	1.3	-	9.33	-0.20	118	499	85	72
44	7.932	0.184	0.085	3.49	85	1.3	-	9.16	-0.17	118	497	85	72
45	8.118	0.186	0.086	3.50	86	1.3	-	8.99	-0.17	117	496	85	72
46	8.303	0.185	0.086	3.48	86	1.3	-	8.83	-0.16	117	494	85	72
47	8.491	0.188	0.087	3.50	86	1.3	-	8.67	-0.16	116	492	85	72
48	8.678	0.187	0.086	3.52	86	1.3	-	8.54	-0.13	116	489	85	72
49	8.866	0.188	0.086	3.51	87	1.3	-	8.40	-0.14	115	486	85	72
50	9.053	0.187	0.085	3.49	87	1.3	102	8.26	-0.14	115	483	85	72
51	9.240	0.187	0.087	3.52	87	1.3	-	8.14	-0.12	114	480	85	72
52	9.425	0.185	0.086	3.52	88	1.3	-	8.00	-0.14	114	476	85	72
53	9.612	0.187	0.088	3.52	88	1.3	-	7.89	-0.11	113	474	85	72
54	9.799	0.187	0.089	3.51	88	1.3	-	7.76	-0.13	113	471	85	71
55	9.988	0.189	0.089	3.52	89	1.3	-	7.66	-0.10	113	467	85	71
56	10.176	0.188	0.088	3.53	89	1.3	-	7.54	-0.12	113	465	84	71
57	10.365	0.189	0.089	3.54	89	1.3	-	7.41	-0.13	112	462	84	71
58	10.553	0.188	0.087	3.54	90	1.3	-	7.28	-0.13	112	460	84	70
59	10.742	0.189	0.088	3.53	90	1.3	-	7.16	-0.12	111	459	84	69
60	10.927	0.185	0.088	3.53	90	1.3	100	7.05	-0.11	111	460	84	68
61	11.117	0.190	0.088	3.54	90	1.3	-	6.96	-0.09	110	458	83	68
62	11.303	0.186	0.089	3.55	91	1.3	-	6.84	-0.12	110	457	83	68
63	11.494	0.191	0.087	3.55	91	1.3	-	6.73	-0.11	111	456	83	68

BOX A TEST DATA - ASTM E2780 / ASTM E2515

Client: IHP
Model: I3000
Run #: 7

Job #: 23-229
Tracking #: 169
Technician: AK
Date: 12/20/2023

	Particulate Sampling Data							Fuel Weight (lb)		Temperature Data (°F)			
Elapsed Time (min)	Gas Meter (ft^3)	Sample Rate (cfm)	Dilution Tunnel dP (in H_2O)	Orifice dH (in H_2O)	Meter Temp (°F)	Meter Vacuum (in Hg)	Pro. Rate (%)	Scale Reading	Weight Change	Dilution Tunnel	Flue	Filter	Ambient
64	11.683	0.189	0.089	3.55	91	1.3	-	6.62	-0.11	111	454	83	68
65	11.873	0.190	0.088	3.54	91	1.3	-	6.51	-0.11	110	454	83	67
66	12.064	0.191	0.089	3.55	91	1.3	-	6.40	-0.11	110	454	82	67
67	12.252	0.188	0.088	3.55	92	1.3	-	6.30	-0.10	110	453	82	67
68	12.442	0.190	0.090	3.56	92	1.3	-	6.19	-0.11	110	452	82	67
69	12.629	0.187	0.088	3.54	92	1.3	-	6.10	-0.09	109	450	82	67
70	12.818	0.189	0.089	3.55	92	1.3	99	5.99	-0.11	110	447	82	67
71	13.007	0.189	0.087	3.56	92	1.3	-	5.87	-0.12	110	447	81	66
72	13.196	0.189	0.087	3.57	92	1.3	-	5.76	-0.11	111	446	81	66
73	13.387	0.191	0.087	3.54	92	1.3	-	5.66	-0.10	110	446	81	66
74	13.577	0.190	0.088	3.55	92	1.3	-	5.55	-0.11	110	445	81	66
75	13.768	0.191	0.087	3.58	93	1.3	-	5.44	-0.11	109	445	81	66
76	13.959	0.191	0.086	3.57	93	1.3	-	5.35	-0.09	109	444	80	66
77	14.147	0.188	0.086	3.56	93	1.3	-	5.25	-0.10	109	443	80	67
78	14.338	0.191	0.085	3.56	93	1.3	-	5.16	-0.09	110	445	80	67
79	14.525	0.187	0.088	3.56	93	1.3	-	5.05	-0.11	111	445	80	68
80	14.715	0.190	0.085	3.57	93	1.3	100	4.94	-0.11	111	444	81	68
81	14.905	0.190	0.086	3.56	93	1.3	-	4.86	-0.08	111	445	81	68
82	15.095	0.190	0.087	3.56	93	1.3	-	4.76	-0.10	110	442	81	68
83	15.286	0.191	0.087	3.56	93	1.3	-	4.67	-0.09	110	441	81	69
84	15.476	0.190	0.085	3.56	93	1.3	-	4.58	-0.09	109	438	81	69
85	15.668	0.192	0.086	3.58	93	1.3	-	4.50	-0.08	109	436	81	69
86	15.858	0.190	0.086	3.57	93	1.3	-	4.43	-0.07	109	434	81	69
87	16.048	0.190	0.087	3.57	93	1.3	-	4.35	-0.08	109	433	81	69
88	16.239	0.191	0.085	3.57	93	1.3	-	4.27	-0.08	108	431	81	70
89	16.427	0.188	0.088	3.56	94	1.3	-	4.19	-0.08	108	430	81	70
90	16.616	0.189	0.087	3.57	94	1.3	101	4.11	-0.08	109	427	81	69
91	16.807	0.191	0.086	3.57	94	1.3	-	4.02	-0.09	108	426	81	68
92	16.996	0.189	0.089	3.57	94	1.3	-	3.97	-0.05	108	426	81	68
93	17.189	0.193	0.086	3.59	94	1.3	-	3.89	-0.08	108	424	81	68
94	17.380	0.191	0.086	3.57	94	1.3	-	3.81	-0.08	107	422	81	68
95	17.571	0.191	0.088	3.58	94	1.3	-	3.72	-0.09	107	422	81	68

BOX A TEST DATA - ASTM E2780 / ASTM E2515

Client: IHP
Model: I3000
Run #: 7

Job #: 23-229
Tracking #: 169
Technician: AK
Date: 12/20/2023

	Particulate Sampling Data							Fuel Weight (lb)		Temperature Data (°F)			
Elapsed Time (min)	Gas Meter (ft^3)	Sample Rate (cfm)	Dilution Tunnel dP (in H_2O)	Orifice dH (in H_2O)	Meter Temp (°F)	Meter Vacuum (in Hg)	Pro. Rate (%)	Scale Reading	Weight Change	Dilution Tunnel	Flue	Filter	Ambient
96	17.763	0.192	0.087	3.58	95	1.3	-	3.65	-0.07	106	420	81	67
97	17.953	0.190	0.089	3.57	95	1.3	-	3.58	-0.07	107	418	81	67
98	18.143	0.190	0.089	3.57	95	1.3	-	3.51	-0.07	107	418	81	67
99	18.335	0.192	0.089	3.58	95	1.3	-	3.43	-0.08	107	415	81	67
100	18.523	0.188	0.088	3.58	95	1.3	100	3.37	-0.06	107	416	81	67
101	18.714	0.191	0.089	3.59	95	1.3	-	3.28	-0.09	106	416	80	67
102	18.905	0.191	0.086	3.59	95	1.3	-	3.21	-0.07	106	415	80	67
103	19.095	0.190	0.086	3.58	95	1.3	-	3.14	-0.07	106	414	80	68
104	19.287	0.192	0.086	3.58	95	1.3	-	3.05	-0.09	106	414	80	68
105	19.479	0.192	0.088	3.57	95	1.3	-	2.99	-0.06	107	413	80	69
106	19.670	0.191	0.085	3.58	95	1.3	-	2.91	-0.08	108	413	80	69
107	19.863	0.193	0.084	3.58	95	1.3	-	2.83	-0.08	107	411	81	69
108	20.054	0.191	0.088	3.58	95	1.3	-	2.77	-0.06	107	412	81	69
109	20.245	0.191	0.085	3.58	95	1.3	-	2.70	-0.07	107	412	81	69
110	20.436	0.191	0.085	3.58	96	1.3	101	2.63	-0.07	107	411	81	69
111	20.626	0.190	0.087	3.58	96	1.3	-	2.57	-0.06	106	409	81	70
112	20.815	0.189	0.087	3.58	96	1.3	-	2.51	-0.06	106	408	81	70
113	21.008	0.193	0.086	3.59	96	1.3	-	2.45	-0.06	106	408	81	70
114	21.198	0.190	0.086	3.59	96	1.3	-	2.40	-0.05	105	405	81	70
115	21.389	0.191	0.087	3.59	96	1.3	-	2.34	-0.06	105	404	81	70
116	21.583	0.194	0.087	3.59	96	1.3	-	2.27	-0.07	105	402	81	70
117	21.774	0.191	0.090	3.60	96	1.3	-	2.22	-0.05	105	400	81	70
118	21.966	0.192	0.085	3.61	96	1.3	-	2.17	-0.05	105	399	81	70
119	22.160	0.194	0.085	3.61	96	1.3	-	2.11	-0.06	104	399	81	70
120	22.351	0.191	0.088	3.59	96	1.3	101	2.06	-0.05	104	398	81	70
121	22.543	0.192	0.084	3.61	96	1.3	-	2.00	-0.06	104	397	81	71
122	22.735	0.192	0.087	3.61	96	1.3	-	1.95	-0.05	104	396	81	71
123	22.926	0.191	0.087	3.59	96	1.3	-	1.89	-0.06	104	396	81	71
124	23.116	0.190	0.087	3.61	97	1.3	-	1.84	-0.05	104	395	81	71
125	23.308	0.192	0.088	3.60	97	1.3	-	1.79	-0.05	104	394	81	71
126	23.500	0.192	0.086	3.60	97	1.3	-	1.73	-0.06	104	394	81	71
127	23.691	0.191	0.085	3.61	97	1.3	-	1.67	-0.06	104	393	81	71

BOX A TEST DATA - ASTM E2780 / ASTM E2515

Client: IHP
Model: I3000
Run #: 7

Job #: 23-229
Tracking #: 169
Technician: AK
Date: 12/20/2023

	Particulate Sampling Data							Fuel Weight (lb)		Temperature Data (°F)			
Elapsed Time (min)	Gas Meter (ft^3)	Sample Rate (cfm)	Dilution Tunnel dP (in H_2O)	Orifice dH (in H_2O)	Meter Temp (°F)	Meter Vacuum (in Hg)	Pro. Rate (%)	Scale Reading	Weight Change	Dilution Tunnel	Flue	Filter	Ambient
128	23.884	0.193	0.086	3.60	97	1.3	-	1.62	-0.05	104	394	81	71
129	24.077	0.193	0.088	3.61	97	1.3	-	1.57	-0.05	104	393	81	71
130	24.269	0.192	0.087	3.60	97	1.3	100	1.51	-0.06	104	394	82	71
131	24.462	0.193	0.086	3.61	97	1.3	-	1.45	-0.06	104	394	82	71
132	24.656	0.194	0.086	3.61	97	1.3	-	1.40	-0.05	104	395	82	71
133	24.844	0.188	0.086	3.61	97	1.3	-	1.34	-0.06	104	395	82	71
134	25.040	0.196	0.086	3.61	97	1.3	-	1.29	-0.05	104	394	82	71
135	25.234	0.194	0.084	3.60	97	1.3	-	1.24	-0.05	103	394	82	71
136	25.425	0.191	0.088	3.61	98	1.3	-	1.20	-0.04	103	393	82	71
137	25.615	0.190	0.087	3.62	98	1.3	-	1.15	-0.05	103	392	82	71
138	25.808	0.193	0.085	3.62	98	1.3	-	1.11	-0.04	103	390	82	71
139	26.001	0.193	0.087	3.61	98	1.3	-	1.06	-0.05	103	389	82	71
140	26.192	0.191	0.087	3.61	98	1.3	100	1.03	-0.03	103	388	82	71
141	26.385	0.193	0.087	3.62	98	1.3	-	1.00	-0.03	103	387	82	71
142	26.579	0.194	0.087	3.61	98	1.3	-	0.95	-0.05	103	386	82	71
143	26.769	0.190	0.086	3.62	98	1.3	-	0.92	-0.03	102	384	82	71
144	26.965	0.196	0.086	3.62	98	1.3	-	0.89	-0.03	102	383	82	71
145	27.159	0.194	0.086	3.63	98	1.3	-	0.86	-0.03	102	382	82	71
146	27.353	0.194	0.090	3.63	98	1.3	-	0.82	-0.04	102	381	82	71
147	27.545	0.192	0.087	3.62	99	1.3	-	0.78	-0.04	101	380	82	71
148	27.738	0.193	0.085	3.63	99	1.3	-	0.76	-0.02	101	379	82	71
149	27.933	0.195	0.086	3.62	99	1.3	-	0.72	-0.04	101	378	82	71
150	28.125	0.192	0.086	3.61	99	1.3	101	0.68	-0.04	102	378	82	71
151	28.316	0.191	0.086	3.61	99	1.3	-	0.65	-0.03	101	377	82	71
152	28.508	0.192	0.086	3.61	99	1.3	-	0.61	-0.04	101	376	82	71
153	28.702	0.194	0.088	3.63	99	1.3	-	0.59	-0.02	101	376	82	71
154	28.894	0.192	0.088	3.62	99	1.3	-	0.56	-0.03	101	375	82	71
155	29.087	0.193	0.087	3.62	99	1.3	-	0.52	-0.04	101	375	81	71
156	29.279	0.192	0.088	3.63	99	1.3	-	0.50	-0.02	101	373	81	71
157	29.473	0.194	0.087	3.63	99	1.3	-	0.47	-0.03	101	374	81	71
158	29.665	0.192	0.086	3.62	99	1.3	-	0.43	-0.04	101	373	81	71
159	29.859	0.194	0.087	3.63	99	1.3	-	0.39	-0.04	101	372	81	71

BOX A TEST DATA - ASTM E2780 / ASTM E2515

Client: IHP
Model: I3000
Run #: 7

Job #: 23-229
Tracking #: 169
Technician: AK
Date: 12/20/2023

	Particulate Sampling Data							Fuel Weight (lb)		Temperature Data (°F)			
Elapsed Time (min)	Gas Meter (ft^3)	Sample Rate (cfm)	Dilution Tunnel dP (in H_2O)	Orifice dH (in H_2O)	Meter Temp (°F)	Meter Vacuum (in Hg)	Pro. Rate (%)	Scale Reading	Weight Change	Dilution Tunnel	Flue	Filter	Ambient
160	30.054	0.195	0.086	3.63	99	1.3	101	0.36	-0.03	100	371	81	71
161	30.248	0.194	0.087	3.63	99	1.3	-	0.33	-0.03	100	370	81	71
162	30.440	0.192	0.088	3.64	99	1.3	-	0.30	-0.03	100	370	81	71
163	30.634	0.194	0.089	3.64	99	1.3	-	0.28	-0.02	101	369	81	71
164	30.828	0.194	0.086	3.62	100	1.3	-	0.23	-0.05	100	368	81	71
165	31.021	0.193	0.087	3.63	100	1.3	-	0.21	-0.02	100	369	81	72
166	31.216	0.195	0.086	3.63	100	1.3	-	0.17	-0.04	100	368	81	71
167	31.409	0.193	0.087	3.63	100	1.3	-	0.15	-0.02	100	367	81	71
168	31.603	0.194	0.087	3.64	100	1.3	-	0.11	-0.04	100	366	81	72
169	31.796	0.193	0.087	3.64	100	1.3	-	0.08	-0.03	100	365	81	72
170	31.989	0.193	0.088	3.64	100	1.3	100	0.06	-0.02	100	364	81	72
171	32.183	0.194	0.085	3.64	100	1.3	-	0.02	-0.04	99	364	81	72
172	32.375	0.192	0.085	3.63	100	1.3	100	0.00	-0.02	100	362	81	72
Avg/Tot	32.375	0.188	0.087	3.51	90.5	1.3	100			108.8	432.3	81.6	70.1

BOX B TEST DATA - ASTM E2780 / ASTM E2515

Client: IHP
Model: I3000
Run #: 7

Job #: 23-229
Tracking #: 169
Technician: AK
Date: 12/20/2023

	Particulate Sampling Data							Flue Gas Data		
Elapsed Time (min)	Gas Meter (ft^3)	Sample Rate (cfm)	Orifice dH (in H_2O)	Meter Temp (°F)	Meter Vacuum (in Hg)	Pro. Rate (%)	Filter (°F)	Flue Draft (in H_2O)	CO_2 (%)	CO (%)
0	0.000		0.19	74	1.2		75	-0.067	4.01	0.040
1	0.132	0.132	3.23	74	1.9	-	78	-0.068	2.69	0.017
2	0.308	0.176	3.23	74	1.9	-	78	-0.073	6.72	0.027
3	0.484	0.176	3.21	74	2.0	-	79	-0.077	8.39	0.048
4	0.659	0.175	3.22	74	1.8	-	79	-0.077	8.89	0.058
5	0.832	0.173	3.22	74	2.1	-	80	-0.081	9.54	0.061
6	1.007	0.175	3.23	74	2.1	-	80	-0.080	10.51	0.065
7	1.183	0.176	3.22	75	2.2	-	81	-0.082	10.29	0.060
8	1.360	0.177	3.23	75	2.2	-	81	-0.085	10.45	0.055
9	1.534	0.174	3.23	75	1.7	-	81	-0.085	12.75	0.157
10	1.708	0.174	3.23	75	2.2	99	82	-0.083	13.25	0.382
11	1.885	0.177	3.23	75	2.2	-	82	-0.085	13.23	0.346
12	2.062	0.177	3.23	76	1.8	-	82	-0.086	12.28	0.107
13	2.237	0.175	3.23	76	2.0	-	83	-0.085	11.85	0.366
14	2.411	0.174	3.24	76	1.9	-	83	-0.085	11.99	0.096
15	2.587	0.176	3.23	76	2.1	-	83	-0.085	11.54	0.127
16	2.763	0.176	3.23	77	1.8	-	84	-0.086	11.92	0.201
17	2.939	0.176	3.23	77	2.2	-	84	-0.086	12.45	0.290
18	3.113	0.174	3.24	77	2.2	-	84	-0.086	12.87	0.467
19	3.289	0.176	3.23	77	2.1	-	84	-0.085	12.87	0.455
20	3.466	0.177	3.24	78	2.0	102	84	-0.085	13.20	0.518
21	3.644	0.178	3.24	78	2.0	-	85	-0.086	13.77	0.804
22	3.820	0.176	3.24	79	1.7	-	85	-0.087	13.74	2.339
23	3.994	0.174	3.24	79	2.2	-	85	-0.087	13.87	1.326
24	4.172	0.178	3.24	79	1.8	-	85	-0.088	13.82	0.721
25	4.349	0.177	3.25	79	1.7	-	85	-0.086	13.82	0.600
26	4.526	0.177	3.24	80	1.7	-	85	-0.088	13.69	0.640
27	4.701	0.175	3.24	80	2.3	-	86	-0.085	13.74	0.733
28	4.877	0.176	3.24	80	1.7	-	86	-0.087	13.70	0.939
29	5.056	0.179	3.24	81	1.7	-	86	-0.087	13.69	1.065
30	5.234	0.178	3.25	81	1.7	102	86	-0.088	13.68	1.101
31	5.412	0.178	3.25	81	2.2	-	86	-0.086	13.77	1.125

BOX B TEST DATA - ASTM E2780 / ASTM E2515

Client: IHP
Model: I3000
Run #: 7

Job #: 23-229
Tracking #: 169
Technician: AK
Date: 12/20/2023

	Particulate Sampling Data							Flue Gas Data		
Elapsed Time (min)	Gas Meter (ft^3)	Sample Rate (cfm)	Orifice dH (in H_2O)	Meter Temp (°F)	Meter Vacuum (in Hg)	Pro. Rate (%)	Filter (°F)	Flue Draft (in H_2O)	CO_2 (%)	CO (%)
32	5.586	0.174	3.25	82	2.2	-	86	-0.086	13.77	1.206
33	5.764	0.178	3.25	82	2.2	-	86	-0.087	13.76	1.302
34	5.942	0.178	3.24	83	1.9	-	86	-0.085	13.76	1.437
35	6.122	0.180	3.26	83	2.1	-	87	-0.086	13.79	1.538
36	6.299	0.177	3.25	83	2.0	-	87	-0.086	13.79	1.723
37	6.475	0.176	3.26	84	1.7	-	87	-0.086	13.80	1.854
38	6.653	0.178	3.25	84	2.0	-	87	-0.086	13.76	1.716
39	6.829	0.176	3.25	84	2.1	-	86	-0.087	13.81	1.332
40	7.010	0.181	3.24	85	1.9	102	87	-0.086	13.69	1.278
41	7.187	0.177	3.25	85	1.9	-	87	-0.086	13.66	1.167
42	7.364	0.177	3.25	85	1.7	-	87	-0.085	13.56	1.136
43	7.543	0.179	3.24	86	2.3	-	87	-0.087	13.50	0.932
44	7.721	0.178	3.24	86	1.9	-	87	-0.085	13.23	0.853
45	7.900	0.179	3.24	86	2.1	-	87	-0.085	12.87	0.589
46	8.077	0.177	3.25	86	1.9	-	87	-0.085	12.06	0.593
47	8.255	0.178	3.25	87	2.0	-	87	-0.084	11.82	0.489
48	8.435	0.180	3.26	87	2.2	-	87	-0.083	11.43	0.491
49	8.613	0.178	3.25	87	2.3	-	87	-0.083	11.40	0.277
50	8.792	0.179	3.25	88	2.1	102	87	-0.082	11.27	0.207
51	8.970	0.178	3.25	88	1.9	-	87	-0.081	11.15	0.057
52	9.148	0.178	3.25	88	2.1	-	87	-0.081	10.86	0.086
53	9.328	0.180	3.26	88	1.7	-	87	-0.080	10.71	0.045
54	9.508	0.180	3.26	89	1.7	-	87	-0.080	10.48	0.036
55	9.687	0.179	3.25	89	2.1	-	87	-0.082	10.35	0.031
56	9.866	0.179	3.26	90	1.9	-	87	-0.081	10.18	0.017
57	10.044	0.178	3.26	90	2.0	-	87	-0.082	10.47	0.014
58	10.223	0.179	3.27	90	2.1	-	87	-0.083	10.48	0.016
59	10.403	0.180	3.26	90	2.0	-	86	-0.080	10.45	0.021
60	10.585	0.182	3.28	91	1.9	101	86	-0.082	10.44	0.016
61	10.764	0.179	3.27	91	2.2	-	86	-0.081	9.90	0.011
62	10.941	0.177	3.28	91	2.1	-	85	-0.081	9.96	0.010
63	11.120	0.179	3.27	92	2.2	-	85	-0.081	9.91	0.011

BOX B TEST DATA - ASTM E2780 / ASTM E2515

Client: IHP
Model: I3000
Run #: 7

Job #: 23-229
Tracking #: 169
Technician: AK
Date: 12/20/2023

	Particulate Sampling Data							Flue Gas Data		
Elapsed Time (min)	Gas Meter (ft^3)	Sample Rate (cfm)	Orifice dH (in H_2O)	Meter Temp (°F)	Meter Vacuum (in Hg)	Pro. Rate (%)	Filter (°F)	Flue Draft (in H_2O)	CO_2 (%)	CO (%)
64	11.301	0.181	3.28	92	2.3	-	85	-0.081	9.97	0.010
65	11.483	0.182	3.28	92	2.3	-	85	-0.080	9.93	0.010
66	11.662	0.179	3.28	92	1.8	-	84	-0.079	9.95	0.012
67	11.839	0.177	3.28	92	1.7	-	84	-0.080	9.83	0.007
68	12.020	0.181	3.29	92	2.1	-	84	-0.080	9.77	0.009
69	12.201	0.181	3.29	93	1.8	-	84	-0.079	9.72	0.009
70	12.381	0.180	3.29	93	2.3	99	83	-0.081	9.73	0.010
71	12.561	0.180	3.28	93	1.8	-	83	-0.080	9.74	0.008
72	12.741	0.180	3.29	93	2.3	-	83	-0.079	9.85	0.016
73	12.921	0.180	3.30	93	1.9	-	83	-0.080	9.88	0.013
74	13.100	0.179	3.29	93	2.2	-	83	-0.082	10.02	0.015
75	13.281	0.181	3.30	93	1.9	-	82	-0.081	10.03	0.017
76	13.463	0.182	3.29	93	1.8	-	82	-0.078	10.04	0.012
77	13.643	0.180	3.30	93	2.0	-	82	-0.076	10.27	0.049
78	13.821	0.178	3.29	93	1.9	-	83	-0.076	10.40	0.080
79	14.002	0.181	3.29	93	1.7	-	82	-0.077	10.47	0.073
80	14.184	0.182	3.31	93	2.0	100	83	-0.077	10.48	0.048
81	14.364	0.180	3.31	93	2.2	-	83	-0.077	10.42	0.027
82	14.545	0.181	3.30	93	2.1	-	83	-0.076	10.27	0.013
83	14.726	0.181	3.30	93	1.7	-	83	-0.078	10.00	0.012
84	14.905	0.179	3.31	93	2.0	-	83	-0.076	9.71	0.013
85	15.085	0.180	3.30	93	1.8	-	83	-0.075	9.64	0.010
86	15.268	0.183	3.30	94	2.0	-	83	-0.076	9.49	0.011
87	15.450	0.182	3.31	94	2.3	-	83	-0.075	9.34	0.012
88	15.630	0.180	3.30	94	2.2	-	83	-0.076	9.23	0.016
89	15.809	0.179	3.30	94	2.0	-	83	-0.075	8.64	0.014
90	15.990	0.181	3.30	94	1.8	101	83	-0.076	8.61	0.014
91	16.171	0.181	3.30	94	2.1	-	83	-0.076	8.57	0.011
92	16.352	0.181	3.30	94	1.8	-	83	-0.076	8.53	0.014
93	16.535	0.183	3.31	95	2.1	-	83	-0.076	8.50	0.015
94	16.716	0.181	3.31	95	2.1	-	83	-0.078	8.51	0.013
95	16.894	0.178	3.31	95	2.1	-	83	-0.076	8.42	0.012

BOX B TEST DATA - ASTM E2780 / ASTM E2515

Client: IHP
Model: I3000
Run #: 7

Job #: 23-229
Tracking #: 169
Technician: AK
Date: 12/20/2023

	Particulate Sampling Data							Flue Gas Data		
Elapsed Time (min)	Gas Meter (ft^3)	Sample Rate (cfm)	Orifice dH (in H_2O)	Meter Temp (°F)	Meter Vacuum (in Hg)	Pro. Rate (%)	Filter (°F)	Flue Draft (in H_2O)	CO_2 (%)	CO (%)
96	17.075	0.181	3.31	95	2.1	-	83	-0.075	8.56	0.015
97	17.258	0.183	3.31	95	1.7	-	83	-0.074	8.65	0.015
98	17.439	0.181	3.31	95	2.3	-	83	-0.076	8.73	0.009
99	17.621	0.182	3.31	95	1.8	-	83	-0.075	8.85	0.008
100	17.802	0.181	3.31	95	2.2	100	83	-0.073	8.85	0.013
101	17.981	0.179	3.31	95	1.8	-	82	-0.078	8.91	0.015
102	18.162	0.181	3.30	95	2.2	-	82	-0.073	8.98	0.016
103	18.345	0.183	3.30	95	1.9	-	82	-0.075	9.09	0.018
104	18.527	0.182	3.31	95	1.7	-	82	-0.073	9.07	0.017
105	18.707	0.180	3.30	95	1.7	-	82	-0.073	9.11	0.013
106	18.889	0.182	3.30	95	1.9	-	82	-0.074	9.14	0.013
107	19.069	0.180	3.30	95	1.8	-	82	-0.074	9.05	0.016
108	19.249	0.180	3.31	95	2.3	-	83	-0.075	8.95	0.010
109	19.432	0.183	3.30	95	2.3	-	83	-0.075	9.11	0.015
110	19.615	0.183	3.31	95	2.3	100	83	-0.073	9.03	0.010
111	19.795	0.180	3.31	95	1.8	-	83	-0.072	8.74	0.009
112	19.975	0.180	3.31	95	2.0	-	83	-0.072	8.55	0.010
113	20.156	0.181	3.31	95	2.1	-	83	-0.073	8.55	0.011
114	20.337	0.181	3.31	95	2.0	-	83	-0.072	8.58	0.008
115	20.520	0.183	3.31	96	2.1	-	83	-0.073	8.62	0.007
116	20.702	0.182	3.31	96	2.2	-	83	-0.071	8.64	0.009
117	20.883	0.181	3.31	96	2.0	-	83	-0.072	8.67	0.008
118	21.063	0.180	3.31	96	2.2	-	83	-0.070	8.73	0.010
119	21.245	0.182	3.31	96	2.3	-	83	-0.071	8.74	0.007
120	21.426	0.181	3.31	96	2.3	100	83	-0.070	8.69	0.009
121	21.608	0.182	3.31	96	2.0	-	83	-0.071	8.72	0.012
122	21.792	0.184	3.31	96	1.9	-	83	-0.070	8.75	0.011
123	21.972	0.180	3.31	96	1.8	-	83	-0.071	8.78	0.008
124	22.152	0.180	3.31	96	2.3	-	83	-0.070	8.81	0.009
125	22.334	0.182	3.30	96	2.2	-	83	-0.071	8.84	0.010
126	22.516	0.182	3.31	96	2.3	-	83	-0.070	8.91	0.011
127	22.698	0.182	3.31	96	2.1	-	84	-0.071	8.82	0.008

BOX B TEST DATA - ASTM E2780 / ASTM E2515

Client: IHP
Model: I3000
Run #: 7

Job #: 23-229
Tracking #: 169
Technician: AK
Date: 12/20/2023

	Particulate Sampling Data							Flue Gas Data		
Elapsed Time (min)	Gas Meter (ft^3)	Sample Rate (cfm)	Orifice dH (in H_2O)	Meter Temp (°F)	Meter Vacuum (in Hg)	Pro. Rate (%)	Filter (°F)	Flue Draft (in H_2O)	CO_2 (%)	CO (%)
128	22.882	0.184	3.31	97	1.9	-	84	-0.068	8.84	0.009
129	23.063	0.181	3.32	97	2.0	-	84	-0.069	8.61	0.014
130	23.243	0.180	3.31	97	1.8	99	84	-0.071	8.68	0.008
131	23.425	0.182	3.31	97	2.1	-	84	-0.073	8.63	0.013
132	23.606	0.181	3.31	97	1.9	-	84	-0.071	8.63	0.011
133	23.786	0.180	3.31	97	2.1	-	84	-0.071	8.55	0.011
134	23.972	0.186	3.31	97	1.7	-	84	-0.071	8.48	0.009
135	24.153	0.181	3.32	97	2.1	-	84	-0.070	8.29	0.006
136	24.333	0.180	3.31	97	2.3	-	84	-0.072	8.16	0.009
137	24.516	0.183	3.30	97	2.0	-	84	-0.071	8.02	0.009
138	24.697	0.181	3.31	97	2.0	-	84	-0.070	7.96	0.007
139	24.880	0.183	3.32	97	1.7	-	84	-0.072	7.60	0.010
140	25.064	0.184	3.31	97	1.9	100	84	-0.069	7.49	0.012
141	25.245	0.181	3.32	98	2.3	-	84	-0.071	7.44	0.012
142	25.425	0.180	3.31	98	1.8	-	84	-0.072	7.43	0.011
143	25.604	0.179	3.31	98	1.7	-	84	-0.069	7.37	0.009
144	25.789	0.185	3.32	98	2.1	-	84	-0.067	7.36	0.012
145	25.973	0.184	3.32	98	2.1	-	84	-0.068	7.36	0.011
146	26.156	0.183	3.32	98	2.2	-	84	-0.068	7.35	0.010
147	26.338	0.182	3.32	98	2.3	-	84	-0.070	7.22	0.010
148	26.519	0.181	3.32	98	2.3	-	84	-0.068	7.04	0.015
149	26.701	0.182	3.32	98	2.2	-	84	-0.069	7.01	0.016
150	26.882	0.181	3.32	98	2.2	99	84	-0.069	7.01	0.013
151	27.066	0.184	3.32	98	2.1	-	84	-0.070	6.97	0.013
152	27.249	0.183	3.32	98	2.1	-	84	-0.068	6.97	0.012
153	27.430	0.181	3.32	98	1.7	-	84	-0.068	6.91	0.016
154	27.612	0.182	3.32	98	2.3	-	84	-0.069	6.86	0.022
155	27.793	0.181	3.32	98	1.7	-	84	-0.068	6.88	0.018
156	27.972	0.179	3.32	98	1.9	-	84	-0.069	6.88	0.017
157	28.156	0.184	3.31	98	2.0	-	84	-0.068	6.81	0.016
158	28.339	0.183	3.32	98	1.7	-	84	-0.069	6.74	0.018
159	28.521	0.182	3.32	98	1.7	-	84	-0.067	6.74	0.017

BOX B TEST DATA - ASTM E2780 / ASTM E2515

Client: IHP
Model: I3000
Run #: 7

Job #: 23-229
Tracking #: 169
Technician: AK
Date: 12/20/2023

	Particulate Sampling Data							Flue Gas Data		
Elapsed Time (min)	Gas Meter (ft^3)	Sample Rate (cfm)	Orifice dH (in H_2O)	Meter Temp (°F)	Meter Vacuum (in Hg)	Pro. Rate (%)	Filter (°F)	Flue Draft (in H_2O)	CO_2 (%)	CO (%)
160	28.703	0.182	3.32	98	2.3	100	84	-0.069	6.77	0.017
161	28.884	0.181	3.32	99	2.2	-	84	-0.068	6.81	0.017
162	29.065	0.181	3.31	99	2.0	-	83	-0.068	6.83	0.019
163	29.249	0.184	3.32	99	1.8	-	83	-0.067	6.87	0.016
164	29.432	0.183	3.32	99	2.1	-	83	-0.068	6.85	0.021
165	29.615	0.183	3.32	99	2.2	-	83	-0.068	6.85	0.022
166	29.801	0.186	3.33	99	1.9	-	83	-0.068	6.86	0.017
167	29.980	0.179	3.32	99	2.2	-	83	-0.067	6.85	0.015
168	30.163	0.183	3.32	99	1.9	-	83	-0.067	6.86	0.018
169	30.346	0.183	3.32	99	1.9	-	83	-0.067	6.88	0.015
170	30.528	0.182	3.32	99	1.7	99	83	-0.068	6.86	0.019
171	30.712	0.184	3.32	99	2.2	-	83	-0.068	6.82	0.018
172	30.891	0.179	3.32	99	2.2	100	83	-0.068	6.81	0.022
Avg/Tot	30.891	0.180	3.27	90.6	2.0	100	83.7	-0.077	9.70	0.216

BOX C TEST DATA - ASTM E2780 / ASTM E2515

Client: IHP
Model: I3000
Run #: 7

Job #: 23-229
Tracking #: 169
Technician: AK
Date: 12/20/2023

	Particulate Sampling Data						
Elapsed Time (min)	Gas Meter (ft^3)	Sample Rate (cfm)	Orifice dH (in H_2O)	Meter Temp (°F)	Meter Vacuum (in Hg)	Pro. Rate (%)	Filter (°F)
0	-0.001		0.08	74	0.8		74
1	0.119	0.120	0.91	72	1.7	-	74
2	0.259	0.140	0.92	72	1.7	-	74
3	0.399	0.140	0.92	72	1.5	-	74
4	0.539	0.140	0.93	72	1.6	-	75
5	0.680	0.141	0.92	72	1.6	-	75
6	0.822	0.142	0.94	73	1.6	-	75
7	0.963	0.141	0.93	73	1.6	-	76
8	1.106	0.143	0.95	73	1.6	-	76
9	1.248	0.142	0.94	73	1.6	-	76
10	1.391	0.143	0.95	74	1.6	98	77
11	1.534	0.143	0.96	74	1.6	-	77
12	1.677	0.143	0.94	74	1.6	-	77
13	1.821	0.144	0.96	75	1.7	-	77
14	1.965	0.144	0.96	75	1.8	-	78
15	2.107	0.142	0.95	75	1.7	-	78
16	2.253	0.146	0.97	76	1.6	-	78
17	2.396	0.143	0.96	76	1.8	-	78
18	2.539	0.143	0.95	76	1.7	-	79
19	2.685	0.146	0.97	76	1.8	-	79
20	2.829	0.144	0.96	77	1.8	101	79
21	2.972	0.143	0.96	77	1.6	-	79
22	3.118	0.146	0.97	77	1.7	-	79
23	3.262	0.144	0.97	78	1.7	-	80
24	3.406	0.144	0.96	77	1.6	-	80
25	3.553	0.147	0.98	77	1.8	-	80
26	3.698	0.145	0.98	78	1.6	-	80
27	3.843	0.145	0.97	78	1.6	-	80
28	3.988	0.145	0.97	79	1.6	-	80
29	4.135	0.147	0.99	79	1.8	-	80
30	4.281	0.146	0.99	79	1.8	101	81
31	4.428	0.147	0.98	80	1.8	-	81

BOX C TEST DATA - ASTM E2780 / ASTM E2515

Client: IHP
Model: I3000
Run #: 7

Job #: 23-229
Tracking #: 169
Technician: AK
Date: 12/20/2023

	Particulate Sampling Data						
Elapsed Time (min)	Gas Meter (ft^3)	Sample Rate (cfm)	Orifice dH (in H_2O)	Meter Temp (°F)	Meter Vacuum (in Hg)	Pro. Rate (%)	Filter (°F)
32	4.574	0.146	0.98	80	1.7	-	81
33	4.722	0.148	0.99	80	1.8	-	81
34	4.869	0.147	1.00	81	1.8	-	81
35	5.016	0.147	0.99	81	1.7	-	81
36	5.163	0.147	0.98	82	1.7	-	81
37	5.310	0.147	0.99	82	1.8	-	82
38	5.459	0.149	1.00	82	1.8	-	82
39	5.604	0.145	1.00	82	1.8	-	82
40	5.754	0.150	0.99	82	1.8	102	82
41	5.902	0.148	0.99	82	1.8	-	82
42	6.049	0.147	0.99	82	1.8	-	82
43	6.199	0.150	1.00	83	1.6	-	82
44	6.347	0.148	1.01	83	1.8	-	82
45	6.496	0.149	1.01	83	1.8	-	82
46	6.644	0.148	1.00	84	1.8	-	82
47	6.793	0.149	1.00	84	1.8	-	82
48	6.942	0.149	1.00	84	1.8	-	82
49	7.091	0.149	1.01	84	1.7	-	82
50	7.241	0.150	1.01	85	1.8	103	82
51	7.391	0.150	1.02	85	1.8	-	82
52	7.540	0.149	1.02	85	1.8	-	82
53	7.690	0.150	1.01	84	1.8	-	82
54	7.840	0.150	1.01	85	1.7	-	82
55	7.989	0.149	1.01	85	1.8	-	82
56	8.140	0.151	1.00	85	1.7	-	82
57	8.290	0.150	1.01	86	1.7	-	82
58	8.440	0.150	1.02	85	1.8	-	82
59	8.591	0.151	1.02	85	1.6	-	81
60	8.743	0.152	1.02	85	1.8	102	81
Avg/Tot	8.744	0.146	0.96	79.1	1.7	101	79.6

WOODSTOVE SURFACE TEMPERATURE DATA

Client: IHP
Model: I3000
Run #: 7

Job #: 23-229
Tracking #: 169
Technician: AK
Date: 12/20/2023

Stove ΔT: 25

	Temperature Data (°F)						
Elapsed Time (min)	FB Left	FB Right	FB Back	FB Top	FB Bottom	Stove Surface Average	Catalyst Exit
0	407	429	278	467	290	374.0	751.4
1	407	429	279	465	298	375.7	665.5
2	407	429	281	463	307	377.2	693.1
3	406	428	282	464	316	379.3	815.0
4	405	428	283	474	325	382.8	900.1
5	404	426	285	471	333	383.6	938.0
6	402	424	286	473	340	385.1	952.2
7	399	422	287	488	347	388.6	957.2
8	396	419	287	496	354	390.3	957.6
9	394	416	288	503	360	392.1	960.6
10	392	414	289	521	365	396.0	988.5
11	389	411	288	529	370	397.5	1016.4
12	387	409	288	548	375	401.2	1010.0
13	384	406	288	556	380	402.7	998.6
14	382	404	287	573	384	406.0	994.5
15	381	402	287	584	387	408.1	990.5
16	379	400	287	605	390	412.3	989.5
17	377	398	287	610	386	411.6	993.7
18	375	397	286	616	379	410.6	1018.7
19	374	396	285	621	371	409.3	1034.1
20	373	395	282	625	364	407.6	1034.6
21	372	394	279	631	356	406.4	1059.4
22	370	393	278	638	350	405.8	1072.0
23	369	393	275	648	344	405.7	1071.0
24	369	392	272	655	338	405.3	1072.2
25	368	392	271	661	333	404.9	1069.6
26	368	392	269	653	329	402.4	1067.5
27	368	392	267	665	325	403.3	1065.7
28	367	393	265	671	321	403.3	1067.9
29	367	393	264	677	318	403.7	1073.6
30	367	393	262	679	315	403.1	1077.8
31	367	394	260	684	312	403.4	1080.1
32	367	395	259	686	310	403.2	1083.4
33	367	396	258	690	308	403.7	1084.7
34	367	396	257	693	307	403.9	1086.0
35	367	397	255	695	305	404.0	1087.3
36	368	398	255	700	304	404.8	1085.8
37	369	399	253	701	302	404.9	1081.2
38	369	400	253	705	301	405.6	1073.0
39	370	401	251	707	300	405.9	1071.3
40	371	402	251	706	300	405.9	1073.5
41	373	403	250	708	299	406.3	1079.3
42	373	404	250	710	298	407.0	1082.7
43	375	406	249	707	298	406.8	1080.3
44	376	407	248	709	297	407.4	1075.5
45	377	408	248	711	297	408.1	1073.2
46	379	409	248	710	297	408.3	1071.6
47	380	410	247	707	297	408.1	1069.3

WOODSTOVE SURFACE TEMPERATURE DATA

Client: IHP
Model: I3000
Run #: 7

Job #: 23-229
Tracking #: 169
Technician: AK
Date: 12/20/2023

Stove ΔT: 25

	Temperature Data (°F)						
Elapsed Time (min)	FB Left	FB Right	FB Back	FB Top	FB Bottom	Stove Surface Average	Catalyst Exit
48	381	412	247	708	296	408.9	1064.4
49	383	413	246	704	297	408.4	1057.8
50	383	415	246	701	297	408.1	1050.4
51	385	416	246	692	297	406.9	1042.7
52	385	417	245	691	296	407.0	1033.0
53	387	418	245	689	296	407.0	1026.1
54	387	420	244	680	296	405.5	1019.9
55	389	421	244	677	296	405.1	1015.8
56	389	422	244	675	295	404.9	1012.4
57	389	422	244	669	295	403.9	1010.3
58	389	422	243	660	295	401.8	1010.1
59	390	423	243	661	294	402.1	1009.3
60	391	423	243	648	293	399.5	1006.4
61	391	424	242	650	293	399.9	1002.4
62	392	424	242	647	292	399.2	1001.8
63	392	425	241	642	291	398.1	1000.7
64	392	424	241	641	290	397.5	998.8
65	392	424	241	638	289	397.0	997.5
66	392	424	241	633	289	395.7	996.1
67	393	425	240	629	288	394.9	994.4
68	393	425	240	627	287	394.4	990.3
69	394	425	240	625	286	393.9	984.4
70	394	425	239	623	285	393.2	978.9
71	394	425	240	620	284	392.6	974.5
72	395	425	240	617	284	392.0	972.6
73	395	425	239	613	283	390.9	974.3
74	395	425	239	609	283	389.9	974.8
75	395	425	239	606	282	389.2	974.8
76	397	425	239	604	282	389.3	981.0
77	397	426	238	603	281	389.1	991.9
78	398	426	239	603	281	389.4	999.9
79	398	427	238	603	281	389.1	1002.6
80	399	426	239	603	280	389.3	1000.3
81	399	426	239	603	280	389.4	997.2
82	400	427	239	602	279	389.3	989.6
83	400	427	239	602	279	389.3	974.6
84	401	427	240	601	279	389.2	959.9
85	401	427	239	598	278	388.8	945.8
86	402	427	240	596	278	388.6	933.0
87	403	428	240	591	278	387.9	923.6
88	403	427	240	588	278	387.4	916.1
89	404	428	240	585	278	386.7	906.7
90	403	427	240	580	278	385.6	895.5
91	404	426	240	574	278	384.4	888.9
92	404	426	240	571	278	383.8	884.5
93	405	426	240	566	278	382.8	880.8
94	405	426	240	564	277	382.4	877.6
95	405	425	241	557	277	380.9	875.5

WOODSTOVE SURFACE TEMPERATURE DATA

Client: IHP
Model: I3000
Run #: 7

Job #: 23-229
Tracking #: 169
Technician: AK
Date: 12/20/2023

Stove ΔT: 25

	Temperature Data (°F)						
Elapsed Time (min)	FB Left	FB Right	FB Back	FB Top	FB Bottom	Stove Surface Average	Catalyst Exit
96	405	424	241	554	277	379.9	874.9
97	405	423	241	551	277	379.4	875.0
98	405	422	242	546	276	378.3	874.7
99	405	422	242	543	276	377.5	874.5
100	405	422	242	540	276	376.8	874.3
101	405	420	243	538	275	376.3	873.3
102	405	420	243	535	275	375.6	873.1
103	406	420	243	535	274	375.5	872.7
104	406	420	244	532	274	375.1	871.7
105	405	421	244	527	274	374.1	870.5
106	404	421	244	528	273	374.0	868.5
107	405	421	245	525	273	373.6	866.5
108	404	421	246	525	273	373.8	863.7
109	404	421	247	521	273	373.1	861.8
110	404	420	247	519	273	372.8	863.0
111	404	420	248	519	273	372.7	865.6
112	403	420	247	518	273	372.4	866.7
113	403	421	248	517	273	372.1	861.0
114	402	421	249	516	273	372.1	854.4
115	402	421	249	514	273	371.8	848.8
116	402	421	250	511	273	371.3	843.3
117	402	421	250	511	273	371.4	838.3
118	403	420	251	508	273	370.9	834.1
119	403	420	251	508	274	371.1	830.9
120	403	420	252	505	274	370.6	828.7
121	404	420	252	504	275	371.0	826.3
122	404	420	252	501	275	370.4	824.2
123	405	420	253	499	276	370.5	822.6
124	405	419	253	498	276	370.4	821.1
125	407	419	254	496	277	370.6	819.3
126	407	419	254	495	278	370.6	817.3
127	407	419	255	494	278	370.6	815.6
128	408	419	255	492	279	370.5	814.0
129	409	419	255	491	279	370.4	813.8
130	409	418	256	489	280	370.4	815.1
131	409	419	256	489	281	370.7	816.6
132	410	419	257	488	281	370.8	818.1
133	410	418	257	487	282	370.8	817.4
134	411	418	258	487	282	371.4	815.6
135	411	418	258	485	283	371.1	814.6
136	411	419	258	485	283	371.3	810.6
137	411	418	259	485	284	371.3	807.2
138	412	418	260	483	284	371.1	805.8
139	411	418	260	482	284	371.1	803.8
140	411	418	261	482	284	371.0	799.4
141	412	417	261	479	284	370.6	795.6
142	411	417	262	477	284	370.2	792.6
143	411	416	262	475	284	369.5	790.2

WOODSTOVE SURFACE TEMPERATURE DATA

Client: IHP
Model: I3000
Run #: 7

Job #: 23-229
Tracking #: 169
Technician: AK
Date: 12/20/2023

Stove ΔT: 25

	Temperature Data (°F)						
Elapsed Time (min)	FB Left	FB Right	FB Back	FB Top	FB Bottom	Stove Surface Average	Catalyst Exit
144	410	416	262	473	284	369.1	788.3
145	410	415	263	471	284	368.6	786.2
146	410	415	263	470	284	368.2	784.5
147	410	414	263	468	284	367.7	783.1
148	409	413	263	466	284	367.0	781.5
149	408	412	263	464	284	366.3	779.5
150	408	411	263	462	284	365.5	777.6
151	408	410	263	461	283	365.1	775.7
152	406	409	263	459	283	364.2	774.7
153	407	409	264	457	283	364.0	774.3
154	407	408	263	456	283	363.3	774.1
155	406	407	263	456	282	362.9	773.3
156	405	406	263	454	282	361.9	771.9
157	404	406	263	452	282	361.3	770.2
158	403	405	263	450	281	360.4	768.2
159	402	404	262	449	281	359.6	766.2
160	401	403	262	447	280	358.6	764.3
161	400	402	263	445	280	357.9	763.0
162	399	401	262	444	279	357.1	762.3
163	398	400	263	443	279	356.3	761.6
164	397	399	262	441	278	355.6	761.2
165	396	398	263	438	277	354.5	761.0
166	395	398	262	434	276	353.1	760.4
167	394	397	262	437	276	353.2	758.1
168	393	396	262	435	275	352.1	755.3
169	393	395	263	433	274	351.4	752.9
170	392	395	263	432	273	350.9	751.2
171	392	394	263	426	273	349.3	750.4
172	391	393	262	426	272	348.8	749.8
Average	395.0	414.1	255.6	561.6	294.9	384.3	914.3

LAB SAMPLE DATA - ASTM E2515

Client: IHP
Model: I3000
Run #: 7

Job #: 23-229
Tracking #: 169
Technician: AK
Date: 12/20/2023

		Sample ID	Tare, mg	Final, mg	Catch, mg
Filters	**A**	G00795	232.2	233.9	1.7
	B	G00796	235.1	236.9	1.8
	C - 1st Hour	G00797	232.2	233.6	1.4
	Amb	G00798	230.6	230.7	0.1
Probes	**A**	13A	117314.9	117315.2	0.3
	B	13B	116941.4	116942.0	0.6
	C - 1st Hour	13C	115650.2	115650.7	0.5
O-rings	**A**	13A	3596.2	3596.8	0.6
	B	13B	3642.5	3642.7	0.2
	C - 1st Hour	13C	4409.5	4410.2	0.7

Placed in Dessicator on:	12/21/2023

Balance Audit (mg):		200.0		200.0				
		Weight (mg)	Date/Time	Weight (mg)	Date/Time	Weight (mg)	Date/Time	Weight (mg)	Date/Time
Filters	**A**	234.0	12/22 8:00	233.9	12/27 9:30				
	B	236.9	12/22 8:00	236.9	12/27 9:30				
	C - 1st Hour	233.4	12/22 8:00	233.6	12/27 9:30				
	Amb	230.6	12/22 8:00	230.7	12/27 9:30				
Probes	**A**	117315.2	12/22 8:00	117315.2	12/27 9:30				
	B	116941.8	12/22 8:00	116942.0	12/27 9:30				
	C - 1st Hour	115650.9	12/22 8:00	115650.7	12/27 9:30				
O-Rings	**A**	3596.6	12/22 8:00	3596.8	12/27 9:30				
	B	3642.7	12/22 8:00	3642.7	12/27 9:30				
	C - 1st Hour	4410.0	12/22 8:00	4410.2	12/27 9:30				

Train A Aggregate, mg:	**2.6**
Train B Aggregate, mg:	**2.6**
Train C Aggregate, mg:	**2.6**
Ambient, mg:	**0.1**

ASTM E2780 Wood Heater Run Sheets

Client: FPI Job Number: 23-229 Tracking #: 169
Model: I3000 Run Number: 7 Test Date: 12/20/23

Wood Heater Run Notes

Test Control Settings

Primary Air Setting(s): Fully Open
Targeted Burn Category: IV

Preburn Notes

Time	Notes
	-None-

Test Notes

Test Burn Start Time: 12:05 Test Fuel Loaded by: 40 seconds
Door Closed: 50 seconds Air Control Set at: 0 seconds
Other Loading Notes: Bypass open while door open, fan set to high @ 15 min

Time	Notes
	-None-

Test Burn End Time: 14:57

Flue Gas Concentration Measurement

Calibration Gas Values: Span Gas CO_2 (%): 16.98 CO (%): 4.30
Mid Gas CO_2 (%): 10.00 CO (%): 2.51

Calibration Results:

	Pre Test			Post Test		
	Zero	Span	Mid	Zero	Span	Mid
Time	10:38	10:39	12/20 10:40	15:15	15:16	15:17
CO_2	-0.08	16.97	10.07	-0.08	16.92	10.04
CO	-0.009	4.325	2.534	-0.032	4.243	2.493

Flue Gas Probe Leak Check: Initial: No Leakage Final: No Leakage

Technician Signature: Date: 12/20/23

ASTM E2780 Wood Heater Run Sheets

Client: FPI Job Number: 23-229 Tracking #: 169
Model: I3000 Run Number: 7 Test Date: 12/20/23

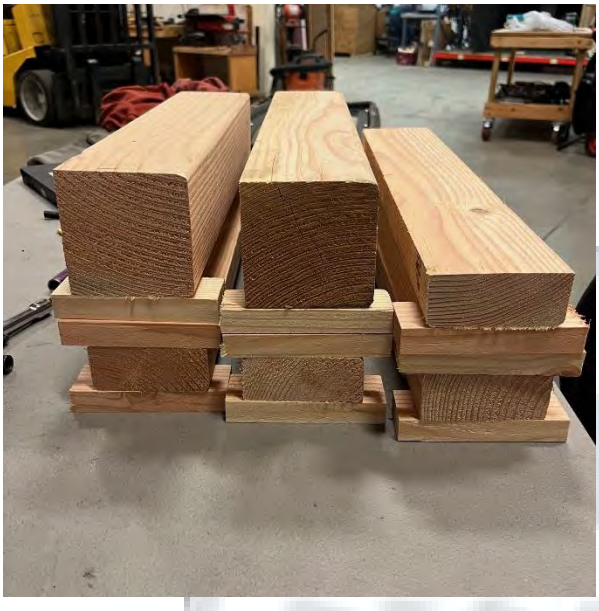

Test Fuel Front/Side View

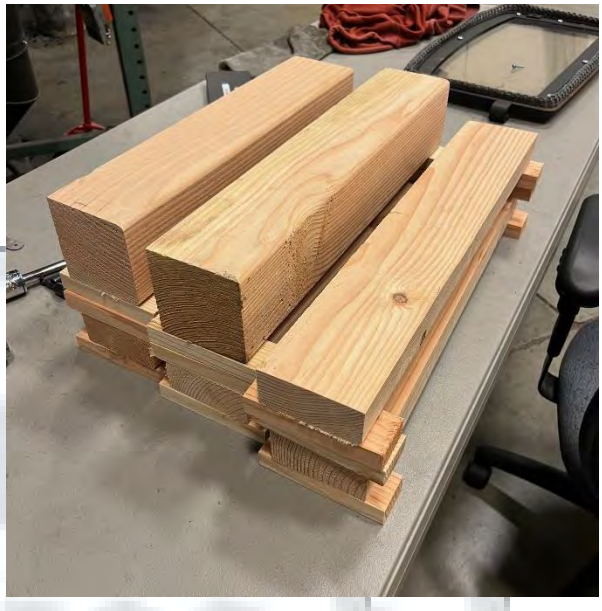

Test Fuel Iso View

Test Fuel Loaded in Stove

Air Setting

Technician Signature: _____ Date: 12/20/23

WOOD STOVE TEST DATA PACKET
ASTM E2780/E2515

Run 8 Data Summary

Client:	IHP
Model:	I3000
Job #:	23-229
Tracking #:	169
Test Date:	12/21/2023

Techician Signature

1/29/2024
Date

TEST RESULTS - ASTM E2780 / ASTM E2515

Client: IHP
Model: I3000
Run #: 8

Job #: 23-229
Tracking #: 169
Technician: AK
Date: 12/21/2023

Burn Rate (kg/hr):	1.74

	Ambient Sample	Sample Train A	Sample Train B	1st Hour Filter
Total Sample Volume (ft^3)	25.146	44.971	43.058	8.827
Average Gas Velocity in Dilution Tunnel (ft/sec)	19.5			
Average Gas Flow Rate in Dilution Tunnel (dscf/hr)	12845.3			
Average Gas Meter Temperature (°F)	69.9	94.4	94.0	79.1
Total Sample Volume (dscf)	25.105	43.334	41.502	8.752
Average Tunnel Temperature (°F)	95.3			
Total Time of Test (min)	235			
Total Particulate Catch (mg)	0.3	4.7	4.9	2.2
Particulate Concentration, dry-standard (g/dscf)	0.0000119	0.0001085	0.0001181	0.0002514
Total PM Emissions (g)	0.60	4.86	5.34	3.08
Particulate Emission Rate (g/hr)	0.15	1.24	1.36	3.08
Emissions Factor (g/kg)	-	0.71	0.78	-
Difference from Average Total Particulate Emissions (g)	-	0.24	0.24	-
Difference from Average Total Particulate Emissions (%)	-	4.7%	4.7%	
Difference from Average Emissions Factor (g/kg)	-	0.04	0.04	-

Final Average Results	
Total Particulate Emissions (g)	5.10
Particulate Emission Rate (g/hr)	1.30
Emissions Factor (g/kg)	0.75
HHV Efficiency (%)	77.2%
LHV Efficiency (%)	83.5%
CO Emissions (g/min)	0.14

Quality Checks	Requirement	Observed	Result
Dual Train Precision	Each train within 7.5% of average emissions (in grams), or emission factors within 0.5 g/kg	See Above	OK
Filter Temps	<90 °F	83.0	OK
Face Velocity	< 30 ft/min	10.7	OK
Leakage Rate	Less than 4% of average sample rate	0 cfm	OK
Ambient Temp	55-90 °F	Min:66.9/Max:71.1	OK
Negative Probe Weight Evaluation	<5% of Total Catch	Probe Catch Not Negative	OK
Pro-Rate Variation	90% of readings between 90-110%; none greater than 120% or less than 80%	See Data Tabs	OK
Stove Surface ΔT	<126°F	22.3	OK

B415.1 Efficiency Results

Manufacturer:	IHP
Model:	I3000
Date:	12/21/23
Run:	8
Control #:	23-229
Test Duration:	235
Output Category:	3

Test Results in Accordance with CSA B415.1-09

	HHV Basis	LHV Basis
Overall Efficiency	77.2%	83.5%
Combustion Efficiency	99.5%	99.5%
Heat Transfer Efficiency	77.6%	83.9%

Output Rate (kJ/h)	26,210	24,863	**(Btu/h)**
Burn Rate (kg/h)	1.71	3.78	**(lb/h)**
Input (kJ/h)	33,940	32,196	**(Btu/h)**

Test Load Weight (dry kg)	6.71	14.79	**dry lb**
MC wet (%)	18.06		
MC dry (%)	22.04		
Particulate (g)	5.10		
CO (g)	32		
Test Duration (h)	3.92		

Emissions	Particulate	CO
g/MJ Output	0.05	0.31
g/kg Dry Fuel	0.76	4.75
g/h	1.30	8.13
g/min	0.02	0.14
lb/MM Btu Output	0.12	0.72

Air/Fuel Ratio (A/F)	12.99

VERSION: **2.4** **4/15/2010**

WOODSTOVE FUEL DATA - ASTM E2780

Client: IHP
Model: I3000
Run #: 8

Job #: 23-229
Tracking #: 169
Technician: AK
Date: 12/21/2023

Preburn Fuel Information

Size	Length (in)	Moisture Content (% DB)	Size	Length (in)	Moisture Content (% DB)
2x4	17.00	24.3	2x4	20.00	19.7
2x4	17.00	19.1			
2x4	17.00	24.5			
2x4	17.00	24.8			
2x4	17.00	19.9			
2x4	17.00	19.7			
2x4	20.00	20.4			
2x4	20.00	19.1			
Total Fuel Weight (lbs):		19.27	Average Moisture (%DB):		21.3

Firebox Volume (ft^3):	2.75
Total 2x4 Crib Weight, with spacers (lbs):	9.63
Total 4x4 Crib Weight, with spacers (lbs):	8.71
Total Wet Fuel Weight, with spacers (lbs):	18.34

Coal Bed Range (20-25%):
Min (lbs): 3.67
Max (lbs): 4.59

Test Fuel Information

Size	Length (in)	Weight (lbs)	Moisture Content (%DB)			Dry Weight (lbs)
4x4	17.00	3.70	24.6	22.2	21.1	3.02
4x4	18.50	4.59	24.1	21.4	24.8	3.72
2x4	17.00	1.63	24.5	23.1	22.7	1.32
2x4	18.50	2.36	24.3	22.5	21.9	1.92
2x4	20.00	2.09	20.4	19.7	20.1	1.74
2x4	20.00	2.05	19.9	19.8	19.7	1.71
					Total Dry Weight, no spacers (lbs):	13.43
					Total Dry Weight, with spacers (lbs):	15.02

Spacer Moisture Readings (%DB)

19.3	19.3	20.3					
20.8	23.1	20.2					
19.3	21.5						
20.4	20.0						
18.7	21.0						
22.3	23.2						
20.6	21.7						
19.3	18.6						

Quality Checks	Requirement	Observed	Result
Fuel Density	25 - 36 (lbs/ft^3, DB)	27.9	OK
Loading Density	6.3 - 7.7 (lbs/ft^3, WB)	6.67	OK
2x4 Fuel Mix	35 - 65 % of total weight	53%	OK

DILUTION TUNNEL & MISC. DATA - ASTM E2780 / E2515

Client:	IHP	Job #:	23-229
Model:	I3000	Tracking #:	169
Run #:	8	Technician:	AK
Test Start Time:	12:32	Date:	12/21/2023

Total Sampling Time (min):	235	
Recording Interval (min):	1	
Meter Box γ Factor:	1.004	(A)
Meter Box γ Factor:	1.004	(B)
Meter Box γ Factor:	1.011	(C)
Meter Box γ Factor:	1.003	(Ambient)
Induced Draft Check (in. H_2O):	0	
Smoke Capture Check (%):	100%	
Date Flue Pipe Last Cleaned:	11/13/2023	
Test Fuel Scale Audit (lbs)	10.00	
Platform Scale Audit (lbs)	10.0	

	Pre-Test	Post Test	Avg.
Barometric Pressure (in. Hg)	29.91	29.89	29.90
Relative Humidity (%)	26.6	32.7	
Room Air Velocity (ft/min)	<50	<50	
Pitot Tube Leak Check	0	0	
Ambient Sample Volume:		25.146	ft^3

Sample Train Leak Checks

	Pre-test	Post-test			
(A)	0.000	0.000	cfm @	-5	in. Hg
(B)	0.000	0.000	cfm @	-6	in. Hg
(C)	0.000	0.000	cfm @	-6	in. Hg
(Ambient)	0.000	0.000	cfm @	-11	in. Hg

DILUTION TUNNEL FLOW

Traverse Data

Point	dP (in H_2O)	Temp (°F)
1	0.074	93
2	0.092	93
3	0.094	93
4	0.070	93
5	0.076	93
6	0.090	93
7	0.090	93
8	0.070	93
Center	0.088	93

Dilution Tunnel H_2O:	2.00	percent
Tunnel Diameter:	6	inches
Pitot Tube Cp:	0.99	[unitless]
Dilution Tunnel MW(dry):	29.00	lb/lb-mole
Dilution Tunnel MW(wet):	28.78	lb/lb-mole
Tunnel Area:	0.1963	ft^2
V_{strav}:	19.39	ft/sec
V_{scent}:	20.13	ft/sec
F_p:	0.964	[ratio]
Initial Tunnel Flow:	213.6	scf/min

Static Pressure: -0.160 in. H_2O

TEST FUEL PROPERTIES

Fuel Load Configuration

Firebox Front

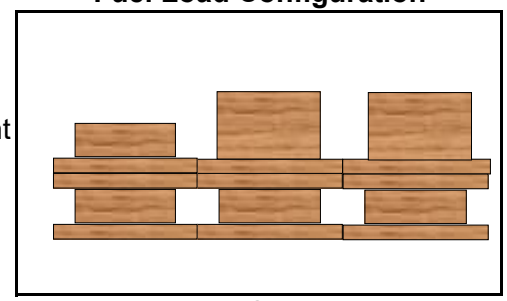

Firebox Back

Firebox Side View

Actual Fuel Used Properties

Fuel Type:	D. Fir
HHV (kJ/kg)	19,810
%C	48.73
%H	6.87
%O	43.9
%Ash	0.5
MC (%DB)	22.0

WOODSTOVE PREBURN DATA - ASTM E2780

Client: IHP
Model: I3000
Run #: 8

Job #: 23-229
Tracking #: 169
Technician: AK
Date: 12/21/2023

Recording Interval (min): 1
Run Time (min): 80

			Temperatures (°F)							
Elapsed Time (min)	Scale Reading (lbs)	Flue Draft (in H_2O)	FB Left	FB Right	FB Back	FB Top	FB Bottom	Stove Surface Average	Flue	Ambient
0	9.46	-0.083	395	419	270	761	436	456.1	490	71
1	9.27	-0.082	396	421	270	758	431	455.0	462	71
2	9.09	-0.080	396	423	269	753	422	452.7	447	71
3	8.94	-0.080	398	425	268	743	411	448.9	438	71
4	8.78	-0.082	398	427	268	736	400	445.6	429	71
5	8.63	-0.078	399	428	267	727	389	441.7	424	71
6	8.50	-0.078	399	430	265	720	379	438.5	421	71
7	8.38	-0.077	400	431	264	712	369	434.8	417	71
8	8.26	-0.077	399	431	263	709	360	432.4	414	71
9	8.15	-0.075	400	432	262	702	351	429.3	411	71
10	8.04	-0.077	399	432	259	694	344	425.7	406	71
11	7.94	-0.075	398	432	259	688	337	422.8	402	71
12	7.84	-0.073	397	432	255	679	330	418.8	402	71
13	7.74	-0.072	396	433	254	671	325	415.7	397	71
14	7.64	-0.073	395	433	254	664	319	412.9	393	71
15	7.54	-0.072	394	432	253	659	314	410.4	390	71
16	7.45	-0.071	393	432	250	649	310	406.8	388	71
17	7.37	-0.071	391	432	250	643	306	404.4	386	71
18	7.29	-0.070	390	431	248	638	302	401.9	383	71
19	7.22	-0.071	389	431	248	630	298	399.1	380	71
20	7.15	-0.072	387	430	246	625	295	396.7	378	71
21	7.07	-0.070	386	429	245	624	293	395.3	377	71
22	7.00	-0.070	385	428	243	621	290	393.4	375	71
23	6.93	-0.069	384	427	243	617	288	391.5	374	71
24	6.86	-0.068	383	426	242	611	286	389.4	372	71
25	6.80	-0.068	381	424	242	608	284	388.0	371	71
26	6.73	-0.069	381	423	240	601	283	385.5	370	71
27	6.67	-0.068	380	422	240	603	281	385.1	368	71
28	6.61	-0.068	379	421	240	599	280	384.0	367	71
29	6.56	-0.068	379	421	239	595	280	382.4	365	71
30	6.51	-0.068	377	420	239	591	279	381.2	362	71
31	6.47	-0.067	376	419	238	584	278	379.2	359	71
32	6.42	-0.066	376	419	238	582	278	378.4	358	71
33	6.37	-0.067	375	418	237	577	278	376.9	355	71
34	6.33	-0.065	375	418	237	569	278	375.3	352	71
35	6.29	-0.065	374	417	236	563	278	373.7	351	71
36	6.24	-0.065	373	417	236	582	278	377.0	348	71
37	6.21	-0.065	373	416	236	575	278	375.4	346	71
38	6.17	-0.066	372	415	235	569	277	373.7	344	70
39	6.12	-0.064	372	415	235	564	277	372.5	343	70
40	6.09	-0.064	371	414	235	558	277	370.8	341	71
41	6.05	-0.062	370	413	234	552	278	369.5	338	71
42	6.01	-0.062	370	413	234	547	278	368.1	337	70
43	5.97	-0.062	369	412	234	542	278	366.8	335	70
44	5.94	-0.062	368	411	233	537	277	365.4	334	70

WOODSTOVE PREBURN DATA - ASTM E2780

Client: IHP
Model: I3000
Run #: 8

Job #: 23-229
Tracking #: 169
Technician: AK
Date: 12/21/2023

Recording Interval (min): 1
Run Time (min): 80

			Temperatures (°F)							
Elapsed Time (min)	Scale Reading (lbs)	Flue Draft (in H_2O)	FB Left	FB Right	FB Back	FB Top	FB Bottom	Stove Surface Average	Flue	Ambient
45	5.90	-0.062	367	411	233	532	277	364.2	332	70
46	5.87	-0.062	367	411	232	527	277	362.9	331	70
47	5.84	-0.060	366	411	232	523	277	361.7	330	70
48	5.80	-0.062	365	410	232	519	277	360.6	329	70
49	5.76	-0.062	365	410	231	514	277	359.4	328	70
50	5.74	-0.061	364	410	232	510	277	358.5	326	70
51	5.70	-0.059	362	410	231	507	277	357.4	324	70
52	5.67	-0.060	362	410	231	503	277	356.5	322	70
53	5.64	-0.058	361	410	231	500	277	355.8	321	70
54	5.60	-0.060	360	410	231	496	277	354.9	320	70
55	5.57	-0.058	360	410	230	494	277	354.1	319	70
56	5.54	-0.059	359	410	231	490	278	353.4	318	70
57	5.52	-0.059	358	410	230	487	278	352.5	318	70
58	5.48	-0.059	358	409	230	485	278	352.1	317	70
59	5.45	-0.060	357	410	230	483	278	351.3	316	70
60	5.41	-0.059	356	409	230	480	278	350.6	315	70
61	5.38	-0.059	355	409	229	478	279	349.8	313	70
62	5.35	-0.058	355	408	229	475	279	349.2	312	70
63	5.32	-0.057	354	408	229	474	279	348.8	312	70
64	5.28	-0.057	354	408	229	471	279	348.1	312	70
65	5.25	-0.057	353	407	229	469	280	347.6	310	70
66	4.80	-0.064	352	406	231	468	280	347.5	405	70
67	4.78	-0.058	352	406	230	466	281	347.2	345	70
68	4.75	-0.058	352	406	230	463	281	346.5	322	70
69	4.72	-0.057	352	406	229	460	281	345.7	312	70
70	4.71	-0.057	352	406	229	457	282	345.2	309	70
71	4.68	-0.057	352	405	229	455	282	344.7	306	70
72	4.65	-0.056	352	405	230	453	283	344.3	305	70
73	4.62	-0.057	352	403	229	451	283	343.6	302	70
74	4.59	-0.056	352	402	229	448	283	343.1	301	70
75	4.57	-0.057	352	402	229	446	283	342.4	301	70
76	4.55	-0.055	352	400	228	444	284	341.6	299	70
77	4.52	-0.055	352	399	229	442	284	341.0	298	70
78	4.50	-0.057	353	398	228	440	284	340.3	296	70
79	4.47	-0.055	353	396	227	438	284	339.6	296	70
80	4.44	-0.055	353	395	227	436	284	338.8	295	70

BOX A TEST DATA - ASTM E2780 / ASTM E2515

Client: IHP
Model: I3000
Run #: 8

Job #: 23-229
Tracking #: 169
Technician: AK
Date: 12/21/2023

	Particulate Sampling Data							Fuel Weight (lb)		Temperature Data (°F)			
Elapsed Time (min)	Gas Meter (ft^3)	Sample Rate (cfm)	Dilution Tunnel dP (in H_2O)	Orifice dH (in H_2O)	Meter Temp (°F)	Meter Vacuum (in Hg)	Pro. Rate (%)	Scale Reading	Weight Change	Dilution Tunnel	Flue	Filter	Ambient
0	0.000		0.089	0.33	75	0.5		18.05		99	342	73	69
1	0.129	0.129	0.089	3.11	75	1.2	-	18.00	-0.05	115	382	76	68
2	0.303	0.174	0.090	3.15	75	1.2	-	17.83	-0.17	104	352	76	67
3	0.478	0.175	0.089	3.19	75	1.2	-	17.67	-0.16	103	364	76	67
4	0.657	0.179	0.089	3.19	76	1.2	-	17.50	-0.17	103	387	76	68
5	0.828	0.171	0.089	3.22	76	1.2	-	17.32	-0.18	104	406	77	68
6	1.004	0.176	0.090	3.23	76	1.2	-	17.20	-0.12	100	390	77	69
7	1.183	0.179	0.089	3.26	76	1.2	-	17.08	-0.12	98	380	77	69
8	1.362	0.179	0.091	3.27	76	1.2	-	16.96	-0.12	98	374	77	69
9	1.544	0.182	0.090	3.29	76	1.2	-	16.84	-0.12	97	372	77	69
10	1.717	0.173	0.088	3.31	76	1.2	93	16.73	-0.11	97	370	77	69
11	1.897	0.180	0.091	3.32	76	1.2	-	16.62	-0.11	96	366	77	69
12	2.080	0.183	0.088	3.33	76	1.2	-	16.51	-0.11	96	365	77	69
13	2.261	0.181	0.089	3.34	76	1.2	-	16.38	-0.13	96	366	77	69
14	2.442	0.181	0.090	3.36	77	1.2	-	16.25	-0.13	96	367	78	69
15	2.621	0.179	0.088	3.37	77	1.2	-	16.12	-0.13	96	368	78	69
16	2.801	0.180	0.088	3.38	77	1.2	-	16.00	-0.12	97	370	78	69
17	2.984	0.183	0.088	3.38	77	1.2	-	15.86	-0.14	97	371	78	69
18	3.169	0.185	0.088	3.40	78	1.2	-	15.73	-0.13	97	371	78	69
19	3.348	0.179	0.089	3.40	78	1.2	-	15.60	-0.13	97	372	78	69
20	3.528	0.180	0.091	3.42	78	1.2	97	15.48	-0.12	97	372	78	69
21	3.713	0.185	0.088	3.43	79	1.2	-	15.34	-0.14	97	372	78	69
22	3.895	0.182	0.089	3.44	79	1.2	-	15.22	-0.12	97	371	78	70
23	4.079	0.184	0.088	3.45	79	1.2	-	15.09	-0.13	97	370	79	70
24	4.267	0.188	0.089	3.46	79	1.2	-	14.97	-0.12	97	370	79	70
25	4.449	0.182	0.089	3.46	80	1.2	-	14.85	-0.12	97	369	79	70
26	4.630	0.181	0.089	3.47	80	1.2	-	14.72	-0.13	97	368	79	70
27	4.817	0.187	0.088	3.46	80	1.3	-	14.58	-0.14	97	369	79	70
28	4.999	0.182	0.087	3.47	81	1.2	-	14.47	-0.11	97	367	79	70
29	5.184	0.185	0.087	3.47	81	1.2	-	14.33	-0.14	97	368	79	70
30	5.374	0.190	0.088	3.49	81	1.3	99	14.21	-0.12	98	369	79	70
31	5.557	0.183	0.088	3.50	82	1.2	-	14.07	-0.14	98	370	79	70

BOX A TEST DATA - ASTM E2780 / ASTM E2515

Client: IHP
Model: I3000
Run #: 8

Job #: 23-229
Tracking #: 169
Technician: AK
Date: 12/21/2023

	Particulate Sampling Data							Fuel Weight (lb)		Temperature Data (°F)			
Elapsed Time (min)	Gas Meter (ft^3)	Sample Rate (cfm)	Dilution Tunnel dP (in H_2O)	Orifice dH (in H_2O)	Meter Temp (°F)	Meter Vacuum (in Hg)	Pro. Rate (%)	Scale Reading	Weight Change	Dilution Tunnel	Flue	Filter	Ambient
32	5.742	0.185	0.088	3.50	82	1.3	-	13.94	-0.13	98	372	79	70
33	5.929	0.187	0.090	3.51	82	1.2	-	13.80	-0.14	98	374	79	70
34	6.111	0.182	0.089	3.50	83	1.2	-	13.67	-0.13	98	375	79	70
35	6.297	0.186	0.088	3.52	83	1.3	-	13.53	-0.14	98	375	79	70
36	6.484	0.187	0.090	3.52	83	1.2	-	13.40	-0.13	98	375	79	70
37	6.673	0.189	0.086	3.53	84	1.2	-	13.26	-0.14	98	376	79	70
38	6.859	0.186	0.089	3.52	84	1.3	-	13.12	-0.14	98	378	79	70
39	7.050	0.191	0.089	3.53	84	1.2	-	12.98	-0.14	98	379	80	70
40	7.231	0.181	0.088	3.52	85	1.3	100	12.84	-0.14	98	380	80	70
41	7.419	0.188	0.089	3.54	85	1.2	-	12.70	-0.14	99	381	80	70
42	7.608	0.189	0.087	3.55	85	1.2	-	12.55	-0.15	99	382	80	70
43	7.794	0.186	0.088	3.55	86	1.2	-	12.42	-0.13	99	383	80	70
44	7.981	0.187	0.088	3.54	86	1.2	-	12.27	-0.15	99	384	80	70
45	8.171	0.190	0.089	3.56	86	1.3	-	12.13	-0.14	99	384	80	70
46	8.362	0.191	0.086	3.55	87	1.2	-	12.00	-0.13	99	385	80	70
47	8.550	0.188	0.088	3.55	87	1.3	-	11.86	-0.14		384	80	70
48	8.734	0.184	0.087	3.57	87	1.3	-	11.72	-0.14	99	384	80	70
49	8.921	0.187	0.087	3.56	88	1.2	-	11.60	-0.12	98	385	80	69
50	9.109	0.188	0.088	3.57	88	1.3	100	11.47	-0.13	99	385	80	69
51	9.298	0.189	0.088	3.56	88	1.3	-	11.34	-0.13	99	384	80	70
52	9.488	0.190	0.090	3.58	88	1.2	-	11.23	-0.11	99	383	80	70
53	9.677	0.189	0.089	3.57	89	1.3	-	11.11	-0.12	99	383	80	70
54	9.869	0.192	0.088	3.58	89	1.3	-	10.99	-0.12	99	383	80	70
55	10.057	0.188	0.088	3.59	89	1.2	-	10.87	-0.12	98	382	80	70
56	10.247	0.190	0.088	3.60	89	1.3	-	10.75	-0.12	99	382	80	70
57	10.435	0.188	0.087	3.59	90	1.3	-	10.63	-0.12	99	381	80	70
58	10.623	0.188	0.088	3.59	90	1.2	-	10.51	-0.12	99	383	80	70
59	10.813	0.190	0.088	3.58	90	1.2	-	10.39	-0.12	99	384	80	70
60	11.001	0.188	0.088	3.58	90	1.3	101	10.27	-0.12	99	384	80	70
61	11.193	0.192	0.088	3.60	91	1.3	-	10.15	-0.12	99	383	80	70
62	11.380	0.187	0.087	3.60	91	1.2	-	10.03	-0.12	99	385	80	70
63	11.574	0.194	0.088	3.60	91	1.3	-	9.91	-0.12	99	384	80	70

BOX A TEST DATA - ASTM E2780 / ASTM E2515

Client: IHP
Model: I3000
Run #: 8

Job #: 23-229
Tracking #: 169
Technician: AK
Date: 12/21/2023

	Particulate Sampling Data							Fuel Weight (lb)		Temperature Data (°F)			
Elapsed Time (min)	Gas Meter (ft^3)	Sample Rate (cfm)	Dilution Tunnel dP (in H_2O)	Orifice dH (in H_2O)	Meter Temp (°F)	Meter Vacuum (in Hg)	Pro. Rate (%)	Scale Reading	Weight Change	Dilution Tunnel	Flue	Filter	Ambient
64	11.763	0.189	0.088	3.61	91	1.2	-	9.79	-0.12	99	383	80	70
65	11.956	0.193	0.087	3.59	92	1.2	-	9.67	-0.12	99	383	80	70
66	12.146	0.190	0.088	3.61	92	1.2	-	9.56	-0.11	98	384	80	70
67	12.337	0.191	0.088	3.61	92	1.3	-	9.43	-0.13	99	385	80	70
68	12.525	0.188	0.090	3.61	92	1.2	-	9.32	-0.11	99	385	80	70
69	12.717	0.192	0.088	3.61	92	1.2	-	9.19	-0.13	99	384	80	71
70	12.907	0.190	0.087	3.62	93	1.2	101	9.08	-0.11	99	385	80	70
71	13.097	0.190	0.087	3.62	93	1.3	-	8.97	-0.11	99	385	80	71
72	13.290	0.193	0.087	3.62	93	1.3	-	8.85	-0.12	99	386	80	71
73	13.482	0.192	0.088	3.61	93	1.3	-	8.74	-0.11	99	384	80	71
74	13.673	0.191	0.088	3.64	93	1.2	-	8.63	-0.11	99	385	80	71
75	13.866	0.193	0.086	3.63	94	1.3	-	8.52	-0.11	99	384	80	71
76	14.058	0.192	0.087	3.63	94	1.3	-	8.39	-0.13	99	383	81	71
77	14.252	0.194	0.088	3.63	94	1.3	-	8.29	-0.10	99	381	80	71
78	14.441	0.189	0.088	3.62	94	1.2	-	8.18	-0.11	99	381	80	71
79	14.635	0.194	0.088	3.62	94	1.3	-	8.08	-0.10	99	381	80	71
80	14.822	0.187	0.087	3.63	94	1.3	102	7.99	-0.09	98	378	80	71
81	15.016	0.194	0.089	3.63	95	1.3	-	7.90	-0.09	98	376	80	71
82	15.205	0.189	0.088	3.63	95	1.2	-	7.80	-0.10	98	376	81	71
83	15.399	0.194	0.088	3.63	95	1.3	-	7.70	-0.10	98	375	80	71
84	15.590	0.191	0.089	3.64	95	1.3	-	7.60	-0.10	98	375	80	71
85	15.786	0.196	0.088	3.64	95	1.3	-	7.50	-0.10	98	374	81	71
86	15.974	0.188	0.091	3.64	95	1.3	-	7.41	-0.09	98	374	81	71
87	16.166	0.192	0.089	3.66	95	1.3	-	7.31	-0.10	98	375	81	71
88	16.362	0.196	0.088	3.65	96	1.3	-	7.21	-0.10	98	374	81	71
89	16.554	0.192	0.089	3.64	96	1.2	-	7.12	-0.09	98	373	81	71
90	16.746	0.192	0.088	3.64	96	1.3	101	7.02	-0.10	98	373	81	71
91	16.940	0.194	0.088	3.66	96	1.2	-	6.93	-0.09	98	373	81	71
92	17.131	0.191	0.090	3.64	96	1.2	-	6.83	-0.10	98	373	81	71
93	17.322	0.191	0.089	3.65	96	1.3	-	6.73	-0.10	98	372	81	71
94	17.515	0.193	0.088	3.65	96	1.2	-	6.64	-0.09	98	371	81	71
95	17.705	0.190	0.089	3.65	97	1.2	-	6.56	-0.08	98	371	81	71

BOX A TEST DATA - ASTM E2780 / ASTM E2515

Client: IHP
Model: I3000
Run #: 8

Job #: 23-229
Tracking #: 169
Technician: AK
Date: 12/21/2023

	Particulate Sampling Data							Fuel Weight (lb)		Temperature Data (°F)			
Elapsed Time (min)	Gas Meter (ft^3)	Sample Rate (cfm)	Dilution Tunnel dP (in H_2O)	Orifice dH (in H_2O)	Meter Temp (°F)	Meter Vacuum (in Hg)	Pro. Rate (%)	Scale Reading	Weight Change	Dilution Tunnel	Flue	Filter	Ambient
96	17.900	0.195	0.088	3.66	97	1.3	-	6.46	-0.10	98	371	81	71
97	18.093	0.193	0.087	3.66	97	1.3	-	6.37	-0.09	98	371	81	71
98	18.288	0.195	0.088	3.66	97	1.3	-	6.29	-0.08	98	370	81	71
99	18.484	0.196	0.088	3.65	97	1.2	-	6.19	-0.10	98	368	81	71
100	18.674	0.190	0.088	3.65	97	1.3	101	6.11	-0.08	98	368	81	71
101	18.868	0.194	0.090	3.64	97	1.3	-	6.02	-0.09	98	367	81	71
102	19.063	0.195	0.088	3.66	97	1.3	-	5.93	-0.09	97	367	81	71
103	19.256	0.193	0.089	3.66	97	1.2	-	5.85	-0.08	97	367	81	71
104	19.448	0.192	0.089	3.66	98	1.3	-	5.76	-0.09	98	367	81	71
105	19.642	0.194	0.091	3.67	98	1.3	-	5.68	-0.08	97	366	81	71
106	19.836	0.194	0.088	3.68	98	1.2	-	5.60	-0.08	97	365	81	71
107	20.029	0.193	0.088	3.67	98	1.2	-	5.50	-0.10	97	365	81	71
108	20.221	0.192	0.088	3.66	98	1.3	-	5.42	-0.08	97	365	81	71
109	20.414	0.193	0.092	3.67	98	1.3	-	5.34	-0.08	97	365	81	71
110	20.608	0.194	0.088	3.66	98	1.2	101	5.26	-0.08	97	365	81	71
111	20.801	0.193	0.087	3.67	98	1.2	-	5.18	-0.08	97	365	81	71
112	20.994	0.193	0.088	3.67	98	1.3	-	5.10	-0.08	97	364	81	71
113	21.188	0.194	0.088	3.67	98	1.3	-	5.02	-0.08	97	363	81	71
114	21.384	0.196	0.090	3.68	99	1.3	-	4.94	-0.08	97	363	81	71
115	21.578	0.194	0.089	3.67	99	1.3	-	4.85	-0.09	97	362	81	71
116	21.771	0.193	0.087	3.67	99	1.2	-	4.78	-0.07	97	361	81	71
117	21.966	0.195	0.090	3.68	99	1.3	-	4.71	-0.07	97	362	81	71
118	22.162	0.196	0.087	3.67	99	1.3	-	4.63	-0.08	97	362	80	71
119	22.356	0.194	0.087	3.68	99	1.3	-	4.56	-0.07	97	360	81	71
120	22.549	0.193	0.087	3.66	99	1.3	102	4.49	-0.07	97	360	80	71
121	22.743	0.194	0.088	3.67	99	1.2	-	4.43	-0.06	97	360	80	71
122	22.937	0.194	0.088	3.69	99	1.3	-	4.36	-0.07	96	358	80	71
123	23.131	0.194	0.088	3.68	99	1.3	-	4.29	-0.07	96	357	80	71
124	23.324	0.193	0.090	3.68	99	1.2	-	4.22	-0.07	96	355	80	70
125	23.517	0.193	0.089	3.69	99	1.3	-	4.14	-0.08	96	354	80	70
126	23.715	0.198	0.088	3.69	99	1.3	-	4.07	-0.07	96	353	80	70
127	23.902	0.187	0.089	3.67	99	1.3	-	4.00	-0.07	96	353	80	70

BOX A TEST DATA - ASTM E2780 / ASTM E2515

Client: IHP
Model: I3000
Run #: 8

Job #: 23-229
Tracking #: 169
Technician: AK
Date: 12/21/2023

	Particulate Sampling Data							Fuel Weight (lb)		Temperature Data (°F)			
Elapsed Time (min)	Gas Meter (ft^3)	Sample Rate (cfm)	Dilution Tunnel dP (in H_2O)	Orifice dH (in H_2O)	Meter Temp (°F)	Meter Vacuum (in Hg)	Pro. Rate (%)	Scale Reading	Weight Change	Dilution Tunnel	Flue	Filter	Ambient
128	24.099	0.197	0.089	3.67	100	1.3	-	3.94	-0.06	96	352	80	70
129	24.293	0.194	0.088	3.67	100	1.3	-	3.87	-0.07	96	352	80	70
130	24.488	0.195	0.087	3.69	100	1.3	102	3.80	-0.07	96	352	80	70
131	24.683	0.195	0.090	3.68	100	1.2	-	3.73	-0.07	96	352	80	70
132	24.878	0.195	0.089	3.69	100	1.2	-	3.67	-0.06	96	351	80	70
133	25.072	0.194	0.087	3.68	100	1.3	-	3.61	-0.06	96	351	80	70
134	25.266	0.194	0.090	3.69	100	1.2	-	3.55	-0.06	96	350	80	71
135	25.462	0.196	0.089	3.70	100	1.3	-	3.49	-0.06	95	348	80	71
136	25.657	0.195	0.089	3.68	100	1.3	-	3.43	-0.06	95	347	80	71
137	25.852	0.195	0.088	3.69	100	1.3	-	3.37	-0.06	95	347	80	71
138	26.045	0.193	0.089	3.69	100	1.3	-	3.31	-0.06	95	347	80	71
139	26.240	0.195	0.088	3.69	100	1.3	-	3.26	-0.05	95	345	80	71
140	26.435	0.195	0.088	3.69	100	1.3	102	3.20	-0.06	95	345	80	71
141	26.629	0.194	0.089	3.69	100	1.3	-	3.14	-0.06	95	345	80	71
142	26.823	0.194	0.089	3.67	100	1.2	-	3.08	-0.06	95	344	80	71
143	27.016	0.193	0.088	3.70	100	1.3	-	3.03	-0.05	95	342	80	70
144	27.210	0.194	0.088	3.69	100	1.2	-	2.98	-0.05	95	342	80	70
145	27.406	0.196	0.088	3.69	100	1.3	-	2.93	-0.05	95	340	80	70
146	27.600	0.194	0.087	3.70	100	1.3	-	2.87	-0.06	95	340	80	70
147	27.794	0.194	0.089	3.69	100	1.2	-	2.82	-0.05	95	339	80	70
148	27.988	0.194	0.090	3.70	100	1.3	-	2.78	-0.04	94	338	80	70
149	28.184	0.196	0.088	3.70	100	1.2	-	2.72	-0.06	94	337	80	70
150	28.380	0.196	0.089	3.70	100	1.3	101	2.67	-0.05	94	336	80	70
151	28.575	0.195	0.088	3.69	100	1.3	-	2.63	-0.04	94	335	80	70
152	28.770	0.195	0.089	3.69	100	1.2	-	2.58	-0.05	94	334	80	70
153	28.964	0.194	0.088	3.70	100	1.3	-	2.53	-0.05	94	334	80	70
154	29.160	0.196	0.090	3.70	100	1.3	-	2.48	-0.05	94	334	80	71
155	29.359	0.199	0.088	3.71	100	1.3	-	2.43	-0.05	94	333	80	70
156	29.551	0.192	0.090	3.69	100	1.3	-	2.39	-0.04	94	332	80	70
157	29.746	0.195	0.090	3.69	100	1.3	-	2.34	-0.05	94	331	80	70
158	29.940	0.194	0.088	3.70	101	1.3	-	2.30	-0.04	94	331	79	70
159	30.135	0.195	0.089	3.70	101	1.3	-	2.25	-0.05	94	331	79	70

BOX A TEST DATA - ASTM E2780 / ASTM E2515

Client: IHP
Model: I3000
Run #: 8

Job #: 23-229
Tracking #: 169
Technician: AK
Date: 12/21/2023

	Particulate Sampling Data							Fuel Weight (lb)		Temperature Data (°F)			
Elapsed Time (min)	Gas Meter (ft^3)	Sample Rate (cfm)	Dilution Tunnel dP (in H_2O)	Orifice dH (in H_2O)	Meter Temp (°F)	Meter Vacuum (in Hg)	Pro. Rate (%)	Scale Reading	Weight Change	Dilution Tunnel	Flue	Filter	Ambient
160	30.331	0.196	0.089	3.70	101	1.3	101	2.22	-0.03	93	330	79	70
161	30.526	0.195	0.090	3.71	101	1.3	-	2.17	-0.05	93	328	79	70
162	30.720	0.194	0.088	3.71	101	1.3	-	2.13	-0.04	93	328	79	70
163	30.913	0.193	0.089	3.70	101	1.3	-	2.10	-0.03	94	327	79	70
164	31.108	0.195	0.089	3.71	101	1.3	-	2.05	-0.05	93	326	79	70
165	31.304	0.196	0.089	3.69	101	1.3	-	2.01	-0.04	93	325	79	70
166	31.499	0.195	0.089	3.70	101	1.2	-	1.99	-0.02	93	325	79	70
167	31.693	0.194	0.089	3.70	101	1.3	-	1.94	-0.05	93	324	79	70
168	31.887	0.194	0.090	3.69	101	1.3	-	1.90	-0.04	93	323	79	70
169	32.083	0.196	0.089	3.70	101	1.3	-	1.86	-0.04	93	321	79	70
170	32.279	0.196	0.090	3.71	101	1.2	100	1.83	-0.03	92	321	79	70
171	32.472	0.193	0.090	3.70	101	1.3	-	1.80	-0.03	93	320	79	70
172	32.670	0.198	0.091	3.70	101	1.3	-	1.76	-0.04	92	319	79	70
173	32.865	0.195	0.090	3.69	101	1.3	-	1.74	-0.02	92	319	79	70
174	33.060	0.195	0.090	3.69	101	1.3	-	1.70	-0.04	92	319	79	70
175	33.256	0.196	0.087	3.69	101	1.2	-	1.67	-0.03	92	318	79	70
176	33.453	0.197	0.088	3.68	101	1.3	-	1.63	-0.04	92	316	79	69
177	33.648	0.195	0.091	3.69	101	1.3	-	1.60	-0.03	92	316	79	70
178	33.842	0.194	0.090	3.68	101	1.3	-	1.58	-0.02	92	315	79	70
179	34.037	0.195	0.089	3.69	101	1.3	-	1.54	-0.04	92	315	79	70
180	34.232	0.195	0.089	3.69	101	1.3	100	1.51	-0.03	92	314	79	70
181	34.431	0.199	0.090	3.69	101	1.3	-	1.48	-0.03	92	313	79	70
182	34.623	0.192	0.089	3.69	101	1.3	-	1.45	-0.03	92	313	79	70
183	34.817	0.194	0.090	3.69	101	1.2	-	1.43	-0.02	92	312	79	70
184	35.011	0.194	0.089	3.69	101	1.3	-	1.39	-0.04	91	312	78	70
185	35.206	0.195	0.089	3.69	101	1.3	-	1.36	-0.03	91	312	78	70
186	35.401	0.195	0.090	3.70	101	1.3	-	1.33	-0.03	91	311	78	70
187	35.597	0.196	0.089	3.70	101	1.2	-	1.31	-0.02	91	310	78	70
188	35.792	0.195	0.089	3.70	101	1.2	-	1.26	-0.05	91	310	78	70
189	35.986	0.194	0.090	3.70	101	1.2	-	1.25	-0.01	91	310	78	69
190	36.182	0.196	0.090	3.70	101	1.2	100	1.22	-0.03	91	309	78	69
191	36.377	0.195	0.089	3.71	101	1.2	-	1.18	-0.04	91	308	78	69

BOX A TEST DATA - ASTM E2780 / ASTM E2515

Client: IHP
Model: I3000
Run #: 8

Job #: 23-229
Tracking #: 169
Technician: AK
Date: 12/21/2023

	Particulate Sampling Data							Fuel Weight (lb)		Temperature Data (°F)			
Elapsed Time (min)	Gas Meter (ft^3)	Sample Rate (cfm)	Dilution Tunnel dP (in H_2O)	Orifice dH (in H_2O)	Meter Temp (°F)	Meter Vacuum (in Hg)	Pro. Rate (%)	Scale Reading	Weight Change	Dilution Tunnel	Flue	Filter	Ambient
192	36.574	0.197	0.088	3.70	101	1.3	-	1.16	-0.02	91	308	78	69
193	36.769	0.195	0.090	3.71	101	1.3	-	1.12	-0.04	91	307	78	69
194	36.965	0.196	0.090	3.70	101	1.3	-	1.10	-0.02	91	307	78	69
195	37.159	0.194	0.090	3.70	101	1.3	-	1.07	-0.03	91	307	78	70
196	37.355	0.196	0.090	3.71	101	1.2	-	1.04	-0.03	91	306	78	69
197	37.552	0.197	0.089	3.71	101	1.3	-	1.01	-0.03	90	306	78	69
198	37.748	0.196	0.089	3.70	101	1.3	-	0.99	-0.02	90	306	78	69
199	37.943	0.195	0.088	3.71	101	1.3	-	0.96	-0.03	90	306	78	69
200	38.141	0.198	0.090	3.70	101	1.2	100	0.93	-0.03	90	305	78	69
201	38.333	0.192	0.091	3.71	101	1.3	-	0.91	-0.02	90	305	78	69
202	38.528	0.195	0.090	3.71	101	1.3	-	0.88	-0.03	90	305	78	69
203	38.725	0.197	0.089	3.71	101	1.3	-	0.84	-0.04	90	305	78	69
204	38.919	0.194	0.090	3.70	101	1.3	-	0.82	-0.02	90	305	78	69
205	39.114	0.195	0.088	3.70	101	1.3	-	0.80	-0.02	90	304	78	69
206	39.307	0.193	0.091	3.69	101	1.3	-	0.77	-0.03	90	304	78	69
207	39.502	0.195	0.090	3.70	101	1.3	-	0.75	-0.02	90	304	78	69
208	39.698	0.196	0.089	3.71	101	1.3	-	0.70	-0.05	90	304	78	69
209	39.893	0.195	0.088	3.69	101	1.2	-	0.69	-0.01	90	304	78	69
210	40.089	0.196	0.088	3.69	101	1.3	100	0.65	-0.04	90	304	78	69
211	40.283	0.194	0.089	3.70	101	1.3	-	0.63	-0.02	90	304	78	69
212	40.479	0.196	0.092	3.72	101	1.3	-	0.61	-0.02	90	303	78	69
213	40.674	0.195	0.090	3.71	101	1.3	-	0.58	-0.03	90	301	77	69
214	40.871	0.197	0.090	3.71	101	1.2	-	0.56	-0.02	90	301	77	69
215	41.066	0.195	0.090	3.71	101	1.2	-	0.53	-0.03	90	300	77	69
216	41.262	0.196	0.088	3.71	101	1.2	-	0.50	-0.03	90	299	77	69
217	41.457	0.195	0.090	3.71	101	1.3	-	0.47	-0.03	90	299	77	69
218	41.653	0.196	0.090	3.70	101	1.3	-	0.45	-0.02	90	298	77	69
219	41.849	0.196	0.089	3.71	101	1.2	-	0.42	-0.03	90	298	77	69
220	42.045	0.196	0.089	3.70	101	1.3	101	0.40	-0.02	90	298	77	69
221	42.240	0.195	0.089	3.70	101	1.3	-	0.36	-0.04	89	299	77	69
222	42.435	0.195	0.091	3.71	101	1.3	-	0.34	-0.02	89	299	77	69
223	42.630	0.195	0.088	3.70	101	1.3	-	0.31	-0.03	89	298	77	69

BOX A TEST DATA - ASTM E2780 / ASTM E2515

Client: IHP
Model: I3000
Run #: 8

Job #: 23-229
Tracking #: 169
Technician: AK
Date: 12/21/2023

	Particulate Sampling Data							Fuel Weight (lb)		Temperature Data (°F)			
Elapsed Time (min)	Gas Meter (ft^3)	Sample Rate (cfm)	Dilution Tunnel dP (in H_2O)	Orifice dH (in H_2O)	Meter Temp (°F)	Meter Vacuum (in Hg)	Pro. Rate (%)	Scale Reading	Weight Change	Dilution Tunnel	Flue	Filter	Ambient
224	42.825	0.195	0.091	3.70	101	1.2	-	0.31	0.00	89	298	77	69
225	43.022	0.197	0.087	3.70	101	1.2	-	0.26	-0.05	89	298	77	69
226	43.216	0.194	0.089	3.71	101	1.3	-	0.24	-0.02	89	298	77	69
227	43.411	0.195	0.089	3.70	101	1.2	-	0.21	-0.03	89	297	77	69
228	43.604	0.193	0.090	3.70	101	1.3	-	0.19	-0.02	89	298	77	69
229	43.799	0.195	0.090	3.71	101	1.3	-	0.15	-0.04	89	298	77	69
230	43.995	0.196	0.089	3.70	101	1.2	100	0.14	-0.01	89	298	77	69
231	44.191	0.196	0.090	3.69	101	1.3	-	0.12	-0.02	89	298	77	69
232	44.386	0.195	0.090	3.69	101	1.2	-	0.09	-0.03	89	296	77	69
233	44.580	0.194	0.089	3.69	101	1.2	-	0.06	-0.03	89	297	77	69
234	44.776	0.196	0.090	3.70	101	1.3	-	0.03	-0.03	89	296	77	69
235	44.971	0.195	0.093	3.71	101	1.3	99	0.00	-0.03	89	296	77	69
Avg/Tot	44.971	0.191	0.089	3.61	94.4	1.2	100			95.3	348.2	79.1	69.9

BOX B TEST DATA - ASTM E2780 / ASTM E2515

Client: IHP
Model: I3000
Run #: 8

Job #: 23-229
Tracking #: 169
Technician: AK
Date: 12/21/2023

	Particulate Sampling Data							Flue Gas Data		
Elapsed Time (min)	Gas Meter (ft^3)	Sample Rate (cfm)	Orifice dH (in H_2O)	Meter Temp (°F)	Meter Vacuum (in Hg)	Pro. Rate (%)	Filter (°F)	Flue Draft (in H_2O)	CO_2 (%)	CO (%)
0	-0.002		0.40	76	1.1		76	-0.062	6.27	0.035
1	0.133	0.135	3.33	76	1.8	-	79	-0.064	2.65	0.026
2	0.311	0.178	3.34	76	2.0	-	79	-0.071	7.39	0.195
3	0.484	0.173	3.33	76	1.9	-	80	-0.073	9.56	0.117
4	0.664	0.180	3.34	76	2.1	-	80	-0.077	9.92	0.092
5	0.840	0.176	3.35	76	1.8	-	80	-0.077	10.89	0.087
6	1.019	0.179	3.35	76	1.6	-	80	-0.073	9.54	0.049
7	1.196	0.177	3.35	76	2.1	-	80	-0.072	8.48	0.025
8	1.371	0.175	3.34	76	2.1	-	80	-0.072	8.36	0.024
9	1.552	0.181	3.35	76	1.9	-	80	-0.072	8.44	0.023
10	1.728	0.176	3.35	77	2.2	98	80	-0.071	7.79	0.016
11	1.908	0.180	3.35	77	1.9	-	80	-0.070	7.59	0.016
12	2.088	0.180	3.35	77	2.1	-	80	-0.071	7.74	0.021
13	2.264	0.176	3.35	77	2.0	-	80	-0.072	8.19	0.022
14	2.441	0.177	3.35	77	1.9	-	80	-0.074	8.60	0.026
15	2.621	0.180	3.35	78	1.7	-	81	-0.069	8.76	0.025
16	2.801	0.180	3.36	78	2.1	-	81	-0.071	9.12	0.026
17	2.979	0.178	3.36	78	1.7	-	81	-0.069	9.13	0.035
18	3.155	0.176	3.35	78	1.6	-	81	-0.071	9.13	0.030
19	3.331	0.176	3.35	79	2.1	-	81	-0.072	9.12	0.024
20	3.510	0.179	3.35	79	1.9	100	81	-0.071	9.19	0.017
21	3.694	0.184	3.36	79	1.6	-	81	-0.071	9.12	0.024
22	3.869	0.175	3.36	80	1.7	-	81	-0.071	9.16	0.020
23	4.046	0.177	3.37	80	1.6	-	81	-0.072	9.18	0.015
24	4.227	0.181	3.36	80	1.7	-	81	-0.070	9.08	0.020
25	4.405	0.178	3.37	80	1.6	-	81	-0.070	9.22	0.018
26	4.586	0.181	3.37	81	1.9	-	81	-0.070	9.41	0.015
27	4.767	0.181	3.37	81	1.8	-	81	-0.069	9.61	0.017
28	4.942	0.175	3.37	81	2.1	-	81	-0.070	9.73	0.016
29	5.121	0.179	3.37	82	1.6	-	81	-0.069	10.03	0.015
30	5.306	0.185	3.37	82	2.0	100	81	-0.070	10.28	0.018
31	5.484	0.178	3.38	82	1.6	-	81	-0.070	10.53	0.020

BOX B TEST DATA - ASTM E2780 / ASTM E2515

Client: IHP
Model: I3000
Run #: 8

Job #: 23-229
Tracking #: 169
Technician: AK
Date: 12/21/2023

	Particulate Sampling Data							Flue Gas Data		
Elapsed Time (min)	Gas Meter (ft^3)	Sample Rate (cfm)	Orifice dH (in H_2O)	Meter Temp (°F)	Meter Vacuum (in Hg)	Pro. Rate (%)	Filter (°F)	Flue Draft (in H_2O)	CO_2 (%)	CO (%)
32	5.663	0.179	3.38	83	1.6	-	82	-0.070	10.86	0.032
33	5.846	0.183	3.38	83	2.1	-	82	-0.071	11.22	0.094
34	6.022	0.176	3.38	83	2.0	-	82	-0.073	11.23	0.111
35	6.202	0.180	3.39	84	1.8	-	82	-0.071	11.25	0.069
36	6.383	0.181	3.38	84	1.9	-	82	-0.070	11.14	0.047
37	6.565	0.182	3.39	84	1.8	-	82	-0.072	11.26	0.055
38	6.745	0.180	3.39	85	2.0	-	82	-0.071	11.37	0.072
39	6.926	0.181	3.39	85	2.2	-	82	-0.071	11.49	0.115
40	7.104	0.178	3.39	85	1.7	101	82	-0.072	11.61	0.130
41	7.286	0.182	3.39	86	2.1	-	82	-0.073	11.76	0.213
42	7.471	0.185	3.39	86	2.1	-	82	-0.072	11.93	0.267
43	7.649	0.178	3.38	86	1.7	-	82	-0.070	11.58	0.589
44	7.830	0.181	3.40	87	1.6	-	82	-0.071	11.64	0.199
45	8.010	0.180	3.40	87	1.6	-	82	-0.072	11.65	0.144
46	8.193	0.183	3.39	87	1.7	-	82	-0.073	11.76	0.128
47	8.376	0.183	3.40	87	2.2	-	82	-0.071	11.65	0.102
48	8.556	0.180	3.40	88	2.2	-	82	-0.072	11.63	0.083
49	8.737	0.181	3.40	88	2.1	-	82	-0.072	11.45	0.071
50	8.918	0.181	3.40	88	1.6	101	82	-0.072	11.31	0.059
51	9.099	0.181	3.41	89	2.0	-	82	-0.073	11.20	0.053
52	9.280	0.181	3.41	89	1.7	-	82	-0.069	10.90	0.026
53	9.464	0.184	3.40	89	1.8	-	82	-0.071	10.77	0.021
54	9.647	0.183	3.41	89	2.1	-	82	-0.070	10.80	0.018
55	9.828	0.181	3.40	90	2.0	-	82	-0.072	10.85	0.018
56	10.010	0.182	3.41	90	2.1	-	82	-0.071	10.75	0.027
57	10.191	0.181	3.42	90	1.7	-	82	-0.071	11.15	0.034
58	10.373	0.182	3.40	91	1.9	-	82	-0.074	11.50	0.075
59	10.557	0.184	3.41	91	2.0	-	82	-0.072	11.33	0.186
60	10.740	0.183	3.41	91	1.9	101	82	-0.070	11.33	0.063
61	10.922	0.182	3.40	91	1.6	-	82	-0.073	11.34	0.034
62	11.101	0.179	3.41	91	1.7	-	82	-0.072	11.22	0.033
63	11.284	0.183	3.41	92	2.2	-	82	-0.071	11.18	0.051

BOX B TEST DATA - ASTM E2780 / ASTM E2515

Client: IHP
Model: I3000
Run #: 8

Job #: 23-229
Tracking #: 169
Technician: AK
Date: 12/21/2023

	Particulate Sampling Data							Flue Gas Data		
Elapsed Time (min)	Gas Meter (ft^3)	Sample Rate (cfm)	Orifice dH (in H_2O)	Meter Temp (°F)	Meter Vacuum (in Hg)	Pro. Rate (%)	Filter (°F)	Flue Draft (in H_2O)	CO_2 (%)	CO (%)
64	11.464	0.180	3.41	92	2.2	-	82	-0.071	11.31	0.048
65	11.651	0.187	3.42	92	1.7	-	82	-0.071	11.25	0.063
66	11.834	0.183	3.41	92	1.6	-	82	-0.072	11.37	0.063
67	12.018	0.184	3.42	92	1.8	-	83	-0.073	11.34	0.091
68	12.200	0.182	3.42	93	2.1	-	83	-0.071	11.33	0.114
69	12.380	0.180	3.41	93	1.7	-	83	-0.070	11.18	0.153
70	12.563	0.183	3.42	93	1.6	101	83	-0.074	11.19	0.147
71	12.746	0.183	3.42	93	1.7	-	83	-0.073	11.02	0.191
72	12.930	0.184	3.42	93	1.6	-	83	-0.071	11.09	0.139
73	13.115	0.185	3.42	94	1.6	-	83	-0.068	11.19	0.122
74	13.297	0.182	3.42	94	2.0	-	83	-0.074	11.25	0.090
75	13.479	0.182	3.43	94	2.0	-	83	-0.070	11.19	0.082
76	13.661	0.182	3.43	94	2.0	-	83	-0.069	11.02	0.062
77	13.847	0.186	3.42	94	1.9	-	83	-0.073	10.86	0.043
78	14.029	0.182	3.42	94	1.8	-	83	-0.074	10.55	0.031
79	14.215	0.186	3.43	95	2.1	-	83	-0.070	10.37	0.030
80	14.396	0.181	3.43	95	2.2	101	83	-0.069	10.30	0.028
81	14.582	0.186	3.42	95	2.2	-	83	-0.070	10.29	0.031
82	14.760	0.178	3.42	95	2.0	-	83	-0.071	10.25	0.028
83	14.948	0.188	3.43	95	1.9	-	83	-0.072	10.34	0.028
84	15.128	0.180	3.44	95	2.2	-	83	-0.070	10.46	0.030
85	15.316	0.188	3.43	95	1.7	-	83	-0.069	10.48	0.035
86	15.498	0.182	3.44	96	1.9	-	83	-0.070	10.44	0.040
87	15.678	0.180	3.43	96	2.2	-	83	-0.069	10.29	0.039
88	15.865	0.187	3.43	96	2.2	-	83	-0.070	10.23	0.036
89	16.047	0.182	3.43	96	1.8	-	83	-0.069	10.26	0.072
90	16.231	0.184	3.44	96	1.8	101	83	-0.069	10.28	0.096
91	16.415	0.184	3.43	96	1.8	-	83	-0.068	10.28	0.094
92	16.600	0.185	3.43	96	1.8	-	83	-0.068	10.28	0.065
93	16.785	0.185	3.43	96	1.7	-	83	-0.068	10.29	0.057
94	16.968	0.183	3.43	97	1.8	-	83	-0.068	10.30	0.066
95	17.148	0.180	3.43	97	2.0	-	83	-0.070	10.32	0.062

BOX B TEST DATA - ASTM E2780 / ASTM E2515

Client: IHP
Model: I3000
Run #: 8

Job #: 23-229
Tracking #: 169
Technician: AK
Date: 12/21/2023

	Particulate Sampling Data							Flue Gas Data		
Elapsed Time (min)	Gas Meter (ft^3)	Sample Rate (cfm)	Orifice dH (in H_2O)	Meter Temp (°F)	Meter Vacuum (in Hg)	Pro. Rate (%)	Filter (°F)	Flue Draft (in H_2O)	CO_2 (%)	CO (%)
96	17.334	0.186	3.43	97	2.0	-	83	-0.070	10.25	0.056
97	17.518	0.184	3.43	97	2.2	-	83	-0.071	10.22	0.070
98	17.703	0.185	3.43	97	1.7	-	83	-0.069	10.01	0.096
99	17.891	0.188	3.43	97	1.7	-	83	-0.070	10.06	0.105
100	18.073	0.182	3.44	97	2.1	101	83	-0.069	10.08	0.096
101	18.256	0.183	3.43	97	1.6	-	83	-0.068	10.08	0.069
102	18.440	0.184	3.43	97	1.6	-	83	-0.069	10.07	0.052
103	18.623	0.183	3.43	97	2.1	-	83	-0.068	10.05	0.085
104	18.808	0.185	3.44	98	1.7	-	83	-0.067	10.00	0.065
105	18.992	0.184	3.44	98	2.1	-	83	-0.070	9.98	0.045
106	19.178	0.186	3.44	98	1.8	-	83	-0.069	9.81	0.052
107	19.363	0.185	3.45	98	2.2	-	83	-0.068	9.92	0.053
108	19.546	0.183	3.43	98	1.7	-	83	-0.069	10.04	0.066
109	19.731	0.185	3.43	98	1.9	-	83	-0.066	10.05	0.065
110	19.913	0.182	3.44	98	2.0	100	83	-0.069	9.98	0.074
111	20.098	0.185	3.44	98	1.7	-	83	-0.069	9.98	0.069
112	20.282	0.184	3.44	98	1.6	-	83	-0.069	9.98	0.060
113	20.468	0.186	3.44	98	1.9	-	83	-0.069	10.00	0.052
114	20.653	0.185	3.44	98	1.8	-	83	-0.070	10.10	0.051
115	20.838	0.185	3.44	98	1.9	-	83	-0.068	10.07	0.042
116	21.023	0.185	3.45	98	2.1	-	83	-0.068	10.07	0.041
117	21.204	0.181	3.44	98	2.0	-	83	-0.069	10.04	0.038
118	21.389	0.185	3.43	98	1.7	-	83	-0.066	9.98	0.034
119	21.574	0.185	3.44	98	1.7	-	83	-0.069	9.76	0.045
120	21.760	0.186	3.43	98	1.7	101	82	-0.069	9.59	0.039
121	21.944	0.184	3.44	99	1.7	-	82	-0.070	9.23	0.037
122	22.130	0.186	3.44	99	1.8	-	82	-0.066	9.30	0.046
123	22.314	0.184	3.44	99	2.1	-	82	-0.066	9.40	0.046
124	22.497	0.183	3.44	99	2.1	-	82	-0.066	9.48	0.049
125	22.682	0.185	3.44	99	1.8	-	82	-0.065	9.51	0.052
126	22.869	0.187	3.44	99	1.6	-	82	-0.066	9.62	0.050
127	23.049	0.180	3.44	99	1.6	-	82	-0.067	9.86	0.037

BOX B TEST DATA - ASTM E2780 / ASTM E2515

Client: IHP
Model: I3000
Run #: 8

Job #: 23-229
Tracking #: 169
Technician: AK
Date: 12/21/2023

	Particulate Sampling Data							Flue Gas Data		
Elapsed Time (min)	Gas Meter (ft^3)	Sample Rate (cfm)	Orifice dH (in H_2O)	Meter Temp (°F)	Meter Vacuum (in Hg)	Pro. Rate (%)	Filter (°F)	Flue Draft (in H_2O)	CO_2 (%)	CO (%)
128	23.237	0.188	3.44	99	1.7	-	82	-0.065	9.90	0.040
129	23.423	0.186	3.44	99	1.6	-	82	-0.067	9.82	0.037
130	23.607	0.184	3.44	99	2.1	101	82	-0.066	9.78	0.038
131	23.791	0.184	3.44	99	1.9	-	82	-0.066	9.79	0.038
132	23.974	0.183	3.44	99	2.1	-	82	-0.066	9.63	0.029
133	24.159	0.185	3.43	99	1.6	-	82	-0.066	9.63	0.035
134	24.344	0.185	3.45	99	2.0	-	82	-0.065	9.56	0.032
135	24.530	0.186	3.45	99	2.0	-	82	-0.064	9.56	0.034
136	24.716	0.186	3.45	99	2.1	-	82	-0.065	9.53	0.034
137	24.900	0.184	3.44	99	1.7	-	82	-0.065	9.50	0.034
138	25.085	0.185	3.44	99	2.2	-	82	-0.064	9.48	0.035
139	25.268	0.183	3.44	99	1.6	-	82	-0.065	9.50	0.035
140	25.453	0.185	3.43	99	2.2	101	82	-0.067	9.48	0.029
141	25.638	0.185	3.44	99	2.2	-	82	-0.065	9.45	0.029
142	25.824	0.186	3.44	99	2.1	-	82	-0.065	9.36	0.035
143	26.009	0.185	3.44	99	2.1	-	82	-0.063	9.37	0.032
144	26.195	0.186	3.45	99	2.1	-	82	-0.065	9.31	0.026
145	26.379	0.184	3.45	99	1.6	-	82	-0.064	9.30	0.023
146	26.563	0.184	3.44	99	1.9	-	82	-0.064	9.21	0.021
147	26.747	0.184	3.45	99	2.2	-	82	-0.063	9.19	0.022
148	26.932	0.185	3.45	99	2.0	-	82	-0.064	9.22	0.022
149	27.119	0.187	3.45	99	1.7	-	82	-0.063	9.23	0.025
150	27.303	0.184	3.45	99	1.7	100	82	-0.063	9.20	0.029
151	27.490	0.187	3.45	99	1.6	-	82	-0.062	9.23	0.022
152	27.674	0.184	3.44	99	2.0	-	81	-0.063	9.23	0.015
153	27.859	0.185	3.45	99	1.9	-	81	-0.064	9.25	0.017
154	28.042	0.183	3.45	99	1.6	-	81	-0.062	9.28	0.014
155	28.231	0.189	3.45	99	2.2	-	81	-0.062	9.23	0.017
156	28.413	0.182	3.45	99	1.6	-	81	-0.064	9.05	0.023
157	28.599	0.186	3.45	99	2.0	-	81	-0.062	9.03	0.014
158	28.785	0.186	3.45	99	1.7	-	81	-0.063	8.88	0.014
159	28.971	0.186	3.45	99	1.6	-	81	-0.062	8.91	0.017

BOX B TEST DATA - ASTM E2780 / ASTM E2515

Client: IHP
Model: I3000
Run #: 8

Job #: 23-229
Tracking #: 169
Technician: AK
Date: 12/21/2023

	Particulate Sampling Data							Flue Gas Data		
Elapsed Time (min)	Gas Meter (ft^3)	Sample Rate (cfm)	Orifice dH (in H_2O)	Meter Temp (°F)	Meter Vacuum (in Hg)	Pro. Rate (%)	Filter (°F)	Flue Draft (in H_2O)	CO_2 (%)	CO (%)
160	29.155	0.184	3.45	99	1.7	100	81	-0.064	8.83	0.013
161	29.339	0.184	3.45	99	2.1	-	81	-0.062	8.79	0.020
162	29.524	0.185	3.46	99	1.7	-	81	-0.062	8.81	0.013
163	29.709	0.185	3.45	99	2.2	-	81	-0.063	8.79	0.016
164	29.895	0.186	3.45	99	1.6	-	81	-0.063	8.75	0.014
165	30.080	0.185	3.44	99	2.2	-	81	-0.063	8.84	0.011
166	30.267	0.187	3.46	99	1.6	-	81	-0.060	8.81	0.013
167	30.451	0.184	3.45	99	1.6	-	81	-0.061	8.74	0.010
168	30.637	0.186	3.45	99	2.0	-	81	-0.061	8.67	0.011
169	30.820	0.183	3.44	99	2.1	-	81	-0.062	8.56	0.013
170	31.005	0.185	3.44	99	2.1	99	81	-0.063	8.55	0.012
171	31.187	0.182	3.45	99	1.6	-	81	-0.059	8.51	0.015
172	31.377	0.190	3.45	99	1.8	-	80	-0.061	8.54	0.013
173	31.562	0.185	3.45	99	1.6	-	80	-0.058	8.48	0.010
174	31.749	0.187	3.45	99	1.9	-	80	-0.059	8.51	0.008
175	31.933	0.184	3.46	99	2.0	-	80	-0.059	8.43	0.013
176	32.118	0.185	3.46	99	2.0	-	80	-0.058	8.47	0.012
177	32.301	0.183	3.45	99	1.8	-	80	-0.059	8.43	0.009
178	32.487	0.186	3.45	99	1.8	-	80	-0.059	8.41	0.012
179	32.673	0.186	3.45	99	1.9	-	80	-0.059	8.39	0.013
180	32.859	0.186	3.45	99	2.0	100	80	-0.059	8.40	0.010
181	33.047	0.188	3.46	99	1.8	-	80	-0.059	8.23	0.011
182	33.230	0.183	3.45	100	1.9	-	80	-0.059	8.12	0.012
183	33.416	0.186	3.46	99	2.1	-	80	-0.060	8.13	0.013
184	33.598	0.182	3.45	100	2.1	-	80	-0.059	8.10	0.015
185	33.785	0.187	3.45	100	1.6	-	80	-0.061	8.06	0.014
186	33.969	0.184	3.44	100	1.8	-	80	-0.058	8.16	0.012
187	34.156	0.187	3.45	100	2.1	-	80	-0.058	8.16	0.009
188	34.341	0.185	3.45	100	1.7	-	80	-0.059	8.13	0.013
189	34.528	0.187	3.45	100	2.1	-	80	-0.060	8.11	0.008
190	34.712	0.184	3.45	99	1.6	99	80	-0.061	8.06	0.013
191	34.897	0.185	3.44	99	1.6	-	80	-0.060	8.08	0.007

BOX B TEST DATA - ASTM E2780 / ASTM E2515

Client: IHP
Model: I3000
Run #: 8

Job #: 23-229
Tracking #: 169
Technician: AK
Date: 12/21/2023

	Particulate Sampling Data							Flue Gas Data		
Elapsed Time (min)	Gas Meter (ft^3)	Sample Rate (cfm)	Orifice dH (in H_2O)	Meter Temp (°F)	Meter Vacuum (in Hg)	Pro. Rate (%)	Filter (°F)	Flue Draft (in H_2O)	CO_2 (%)	CO (%)
192	35.081	0.184	3.45	99	1.6	-	80	-0.058	8.09	0.012
193	35.266	0.185	3.45	99	1.6	-	80	-0.060	8.11	0.016
194	35.452	0.186	3.45	99	1.8	-	80	-0.059	8.09	0.010
195	35.639	0.187	3.45	99	1.7	-	80	-0.058	8.06	0.012
196	35.824	0.185	3.45	99	1.7	-	80	-0.058	8.01	0.008
197	36.011	0.187	3.45	99	2.1	-	80	-0.059	7.98	0.011
198	36.195	0.184	3.45	99	1.6	-	80	-0.059	7.96	0.011
199	36.379	0.184	3.45	99	1.9	-	80	-0.058	7.98	0.009
200	36.567	0.188	3.46	99	1.7	99	80	-0.061	8.00	0.010
201	36.749	0.182	3.45	99	2.1	-	80	-0.058	7.91	0.014
202	36.935	0.186	3.45	99	1.9	-	79	-0.058	7.85	0.012
203	37.122	0.187	3.45	99	1.6	-	79	-0.056	7.86	0.014
204	37.308	0.186	3.46	99	1.8	-	79	-0.060	7.78	0.017
205	37.492	0.184	3.45	99	1.9	-	79	-0.057	7.81	0.014
206	37.678	0.186	3.45	99	1.7	-	79	-0.053	7.74	0.010
207	37.861	0.183	3.45	99	2.0	-	79	-0.059	7.74	0.007
208	38.047	0.186	3.45	99	1.6	-	79	-0.058	7.78	0.020
209	38.231	0.184	3.44	99	2.1	-	79	-0.057	7.72	0.015
210	38.419	0.188	3.45	99	2.2	100	79	-0.060	7.66	0.013
211	38.604	0.185	3.45	99	1.8	-	79	-0.057	7.60	0.012
212	38.791	0.187	3.45	99	2.1	-	79	-0.057	7.65	0.015
213	38.975	0.184	3.45	99	2.1	-	79	-0.057	7.63	0.012
214	39.161	0.186	3.45	99	2.1	-	79	-0.057	7.67	0.014
215	39.344	0.183	3.45	99	1.7	-	79	-0.059	7.67	0.014
216	39.530	0.186	3.45	99	1.9	-	79	-0.057	7.70	0.013
217	39.716	0.186	3.45	99	2.0	-	79	-0.058	7.69	0.015
218	39.902	0.186	3.45	99	2.1	-	79	-0.058	7.69	0.015
219	40.088	0.186	3.45	99	2.1	-	79	-0.059	7.71	0.013
220	40.274	0.186	3.45	99	2.0	100	79	-0.058	7.67	0.014
221	40.458	0.184	3.46	99	1.8	-	79	-0.056	7.71	0.015
222	40.644	0.186	3.45	99	1.6	-	79	-0.057	7.66	0.009
223	40.827	0.183	3.45	100	1.8	-	79	-0.057	7.70	0.017

BOX B TEST DATA - ASTM E2780 / ASTM E2515

Client: IHP
Model: I3000
Run #: 8

Job #: 23-229
Tracking #: 169
Technician: AK
Date: 12/21/2023

	Particulate Sampling Data							Flue Gas Data		
Elapsed Time (min)	Gas Meter (ft^3)	Sample Rate (cfm)	Orifice dH (in H_2O)	Meter Temp (°F)	Meter Vacuum (in Hg)	Pro. Rate (%)	Filter (°F)	Flue Draft (in H_2O)	CO_2 (%)	CO (%)
224	41.013	0.186	3.45	100	1.6	-	79	-0.058	7.71	0.015
225	41.199	0.186	3.45	99	1.6	-	79	-0.055	7.66	0.022
226	41.385	0.186	3.45	99	1.6	-	79	-0.056	7.65	0.016
227	41.571	0.186	3.46	99	1.6	-	79	-0.058	7.61	0.014
228	41.757	0.186	3.45	99	1.9	-	79	-0.056	7.64	0.015
229	41.942	0.185	3.46	99	1.8	-	79	-0.056	7.61	0.019
230	42.125	0.183	3.45	99	1.8	99	79	-0.057	7.55	0.021
231	42.311	0.186	3.46	99	1.7	-	79	-0.056	7.56	0.015
232	42.496	0.185	3.45	99	1.7	-	79	-0.059	7.55	0.024
233	42.683	0.187	3.45	99	1.6	-	79	-0.058	7.57	0.016
234	42.868	0.185	3.45	99	2.0	-	79	-0.057	7.52	0.016
235	43.056	0.188	3.45	99	2.1	99	79	-0.056	7.52	0.019
Avg/Tot	43.058	0.183	3.41	94.0	1.9	100	81.2	-0.066	9.38	0.044

BOX C TEST DATA - ASTM E2780 / ASTM E2515

Client: IHP
Model: I3000
Run #: 8

Job #: 23-229
Tracking #: 169
Technician: AK
Date: 12/21/2023

	Particulate Sampling Data						
Elapsed Time (min)	Gas Meter (ft^3)	Sample Rate (cfm)	Orifice dH (in H_2O)	Meter Temp (°F)	Meter Vacuum (in Hg)	Pro. Rate (%)	Filter (°F)
0	-0.004		0.14	75	0.8		74
1	0.116	0.120	0.92	73	1.8	-	75
2	0.258	0.142	0.94	73	1.6	-	75
3	0.395	0.137	0.92	73	1.8	-	75
4	0.540	0.145	0.94	73	1.8	-	75
5	0.678	0.138	0.94	73	1.6	-	75
6	0.821	0.143	0.95	73	1.6	-	75
7	0.964	0.143	0.96	73	1.6	-	75
8	1.106	0.142	0.95	73	1.7	-	75
9	1.253	0.147	0.96	73	1.6	-	75
10	1.395	0.142	0.97	74	1.8	96	75
11	1.539	0.144	0.96	74	1.7	-	75
12	1.686	0.147	0.97	74	1.6	-	75
13	1.831	0.145	0.98	74	1.8	-	76
14	1.975	0.144	0.97	75	1.7	-	76
15	2.120	0.145	0.97	75	1.6	-	76
16	2.266	0.146	0.98	75	1.6	-	76
17	2.411	0.145	0.98	76	1.6	-	76
18	2.555	0.144	0.97	76	1.8	-	76
19	2.699	0.144	0.98	77	1.6	-	76
20	2.844	0.145	0.98	76	1.6	99	76
21	2.992	0.148	0.97	77	1.8	-	76
22	3.136	0.144	0.99	77	1.7	-	76
23	3.282	0.146	0.99	77	1.8	-	77
24	3.431	0.149	0.99	78	1.8	-	77
25	3.575	0.144	0.98	78	1.7	-	77
26	3.722	0.147	1.00	78	1.7	-	77
27	3.873	0.151	1.00	78	1.7	-	77
28	4.017	0.144	1.00	78	1.6	-	77
29	4.164	0.147	1.00	79	1.6	-	77
30	4.314	0.150	0.99	79	1.6	100	77
31	4.460	0.146	1.00	80	1.8	-	77

BOX C TEST DATA - ASTM E2780 / ASTM E2515

Client: IHP
Model: I3000
Run #: 8

Job #: 23-229
Tracking #: 169
Technician: AK
Date: 12/21/2023

	Particulate Sampling Data						
Elapsed Time (min)	Gas Meter (ft^3)	Sample Rate (cfm)	Orifice dH (in H_2O)	Meter Temp (°F)	Meter Vacuum (in Hg)	Pro. Rate (%)	Filter (°F)
32	4.610	0.150	1.01	80	1.7	-	77
33	4.760	0.150	1.02	80	1.6	-	77
34	4.906	0.146	1.01	80	1.7	-	77
35	5.055	0.149	1.01	81	1.6	-	77
36	5.204	0.149	1.00	81	1.6	-	77
37	5.353	0.149	1.01	81	1.6	-	77
38	5.503	0.150	1.02	81	1.6	-	77
39	5.655	0.152	1.02	82	1.6	-	78
40	5.803	0.148	1.02	82	1.7	102	78
41	5.953	0.150	1.03	82	1.7	-	78
42	6.105	0.152	1.03	82	1.6	-	78
43	6.252	0.147	1.02	83	1.7	-	78
44	6.402	0.150	1.02	84	1.6	-	78
45	6.552	0.150	1.01	84	1.6	-	78
46	6.706	0.154	1.01	84	1.8	-	78
47	6.856	0.150	1.02	83	1.8	-	78
48	7.004	0.148	1.03	84	1.8	-	78
49	7.156	0.152	1.03	84	1.6	-	78
50	7.307	0.151	1.03	84	1.7	102	78
51	7.459	0.152	1.04	84	1.6	-	78
52	7.610	0.151	1.04	84	1.6	-	78
53	7.761	0.151	1.04	84	1.6	-	78
54	7.912	0.151	1.04	85	1.6	-	78
55	8.064	0.152	1.04	83	1.7	-	78
56	8.215	0.151	1.04	85	1.8	-	78
57	8.367	0.152	1.04	85	1.7	-	78
58	8.519	0.152	1.03	85	1.8	-	78
59	8.671	0.152	1.03	86	1.7	-	78
60	8.823	0.152	1.03	86	1.8	103	78
Avg/Tot	8.827	0.147	0.98	79.1	1.7	100	76.6

WOODSTOVE SURFACE TEMPERATURE DATA

Client: IHP
Model: I3000
Run #: 8

Job #: 23-229
Tracking #: 169
Technician: AK
Date: 12/21/2023

Stove ΔT: 22

	Temperature Data (°F)						
Elapsed Time (min)	FB Left	FB Right	FB Back	FB Top	FB Bottom	Stove Surface Average	Catalyst Exit
0	354	392	229	432	289	339.1	666.9
1	354	391	233	432	297	341.1	639.1
2	354	389	234	432	304	342.5	657.7
3	354	388	234	433	312	344.3	768.9
4	354	386	235	440	320	347.0	866.9
5	353	384	237	451	326	350.3	897.9
6	352	383	237	464	333	353.5	877.5
7	350	381	238	475	339	356.7	867.8
8	349	379	240	485	344	359.3	850.1
9	347	377	241	492	349	361.4	839.4
10	345	375	242	498	354	362.9	836.9
11	343	373	242	503	358	364.0	832.3
12	341	372	243	505	362	364.7	831.0
13	339	370	243	509	366	365.3	835.6
14	337	369	243	511	369	366.0	844.0
15	335	367	243	515	372	366.6	852.7
16	333	366	241	517	371	365.5	859.6
17	331	364	240	519	365	363.7	864.8
18	328	362	238	521	359	361.6	867.1
19	326	361	236	523	352	359.4	867.4
20	324	359	235	524	344	357.3	866.8
21	323	358	232	525	337	355.1	865.0
22	320	357	230	527	331	353.0	862.4
23	318	355	229	528	325	351.1	856.7
24	316	354	226	529	319	349.1	854.0
25	315	353	226	531	314	347.8	852.6
26	313	352	222	532	310	345.7	850.6
27	310	352	221	532	306	344.0	849.9
28	309	351	219	534	302	342.8	850.8
29	307	350	217	535	298	341.5	853.6
30	305	350	216	537	295	340.6	856.1
31	303	349	215	540	292	339.8	860.5
32	302	348	213	543	290	339.1	865.4
33	301	348	212	547	287	338.9	872.2
34	299	348	210	551	285	338.6	877.6
35	298	348	209	556	283	338.5	880.9
36	297	348	208	560	281	338.6	882.1
37	296	347	207	564	279	338.6	884.6
38	295	347	206	569	277	338.7	888.1
39	294	348	205	573	276	338.9	891.8
40	294	348	204	577	274	339.2	895.0
41	293	348	203	581	273	339.5	897.9
42	292	349	202	585	271	339.8	902.7
43	292	350	201	589	270	340.3	905.2
44	291	351	201	592	269	340.7	903.8
45	291	351	201	595	267	340.9	897.5
46	291	352	200	596	266	341.1	895.5
47	290	353	200	600	265	341.6	898.6

WOODSTOVE SURFACE TEMPERATURE DATA

Client: IHP
Model: I3000
Run #: 8

Job #: 23-229
Tracking #: 169
Technician: AK
Date: 12/21/2023

Stove ΔT: 22

	Temperature Data (°F)						
Elapsed Time (min)	FB Left	FB Right	FB Back	FB Top	FB Bottom	Stove Surface Average	Catalyst Exit
48	290	354	200	601	264	341.8	901.5
49	290	355	199	604	263	342.3	904.6
50	290	356	199	607	262	342.8	907.2
51	290	357	198	610	261	343.3	906.2
52	290	357	198	613	260	343.5	904.5
53	290	357	197	614	260	343.7	901.8
54	291	357	197	616	259	343.9	899.8
55	291	358	197	617	258	343.9	898.9
56	291	358	197	618	257	343.9	897.0
57	291	358	197	618	256	343.8	897.4
58	291	357	197	618	255	343.7	904.8
59	291	357	197	619	254	343.8	915.6
60	291	357	197	620	254	343.8	918.2
61	292	357	197	621	253	344.0	915.6
62	292	357	197	622	252	344.1	913.1
63	293	358	196	623	251	344.1	911.6
64	293	358	197	624	250	344.3	913.3
65	294	358	197	624	250	344.3	916.9
66	294	358	197	625	249	344.5	921.1
67	295	358	197	626	248	344.7	928.4
68	295	359	197	626	248	344.9	934.3
69	295	359	197	628	247	345.2	937.2
70	296	360	197	628	246	345.4	936.8
71	297	360	197	629	246	345.5	936.0
72	297	361	197	628	245	345.7	936.3
73	298	361	198	628	245	345.9	936.1
74	298	361	198	628	244	345.8	934.4
75	299	362	198	628	244	346.0	930.8
76	299	362	198	627	243	345.9	925.7
77	300	362	198	625	242	345.7	917.6
78	301	363	199	624	242	345.6	909.3
79	302	363	199	622	241	345.6	900.9
80	302	364	199	620	241	345.0	894.8
81	303	364	199	617	240	344.8	891.1
82	304	364	200	615	240	344.4	889.7
83	305	365	200	611	239	343.8	888.8
84	305	365	200	609	239	343.6	889.9
85	306	365	200	607	239	343.4	894.0
86	306	366	200	606	238	343.1	898.3
87	307	366	200	605	238	343.2	898.5
88	307	367	200	605	238	343.3	897.5
89	307	367	200	604	238	343.1	897.3
90	308	368	200	603	237	343.1	896.6
91	308	368	201	602	237	343.2	896.4
92	309	369	201	601	237	343.1	895.5
93	309	369	200	600	237	343.1	894.5
94	309	370	201	600	237	343.1	892.8
95	310	370	200	599	237	343.1	891.5

WOODSTOVE SURFACE TEMPERATURE DATA

Client: IHP
Model: I3000
Run #: 8

Job #: 23-229
Tracking #: 169
Technician: AK
Date: 12/21/2023

Stove ΔT: 22

	Temperature Data (°F)						
Elapsed Time (min)	FB Left	FB Right	FB Back	FB Top	FB Bottom	Stove Surface Average	Catalyst Exit
96	310	371	201	599	237	343.3	890.0
97	310	371	201	597	236	343.1	890.4
98	310	371	201	597	236	343.1	893.4
99	311	372	201	597	236	343.2	894.6
100	311	372	202	596	236	343.2	893.6
101	311	372	202	595	236	343.2	891.5
102	312	373	202	594	236	343.2	888.9
103	312	373	202	593	235	343.0	886.9
104	312	373	202	592	235	343.0	886.8
105	312	374	202	592	235	342.9	885.7
106	313	374	203	591	235	342.8	884.9
107	313	374	203	589	234	342.7	884.7
108	313	375	203	588	234	342.5	884.3
109	313	375	204	586	234	342.3	884.2
110	313	375	204	585	233	342.2	884.3
111	314	376	204	584	233	342.0	884.1
112	314	376	204	583	233	341.8	883.1
113	314	376	204	581	233	341.8	881.7
114	314	377	205	580	233	341.8	880.0
115	315	377	205	579	233	341.7	879.0
116	315	377	205	578	233	341.5	877.6
117	315	377	207	577	232	341.6	876.4
118	315	378	207	576	232	341.6	875.2
119	316	378	207	575	232	341.6	875.8
120	316	378	208	574	232	341.4	876.1
121	316	379	208	572	232	341.3	875.7
122	316	379	208	569	232	340.8	871.9
123	317	379	208	567	232	340.5	864.8
124	317	379	209	563	232	340.0	859.1
125	317	380	209	560	232	339.5	854.8
126	317	380	209	557	232	338.9	852.5
127	317	380	210	554	232	338.6	850.6
128	317	380	210	551	232	338.1	849.3
129	318	381	211	549	232	338.1	849.2
130	319	381	211	547	231	337.8	848.5
131	319	382	212	545	231	337.7	847.9
132	320	382	213	543	231	337.7	846.6
133	321	382	214	541	231	337.7	844.6
134	321	383	214	539	231	337.5	841.6
135	321	383	215	537	231	337.4	839.5
136	322	383	216	535	231	337.4	837.8
137	322	384	217	534	231	337.4	836.2
138	323	384	218	532	231	337.5	834.3
139	324	385	218	530	231	337.4	832.4
140	324	385	219	527	231	337.4	831.1
141	325	386	220	526	231	337.3	829.5
142	325	386	220	524	232	337.4	827.9
143	326	387	220	523	232	337.4	826.3

WOODSTOVE SURFACE TEMPERATURE DATA

Client: IHP
Model: I3000
Run #: 8

Job #: 23-229
Tracking #: 169
Technician: AK
Date: 12/21/2023

Stove ΔT: 22

	Temperature Data (°F)						
Elapsed Time (min)	FB Left	FB Right	FB Back	FB Top	FB Bottom	Stove Surface Average	Catalyst Exit
144	327	387	220	521	232	337.4	824.6
145	328	387	221	519	232	337.3	821.8
146	329	388	222	517	232	337.4	817.5
147	329	388	222	515	233	337.3	812.9
148	330	389	222	512	233	337.1	809.2
149	330	389	223	510	233	337.1	806.3
150	331	390	224	508	233	337.1	804.5
151	331	390	224	506	234	337.1	802.7
152	332	390	224	504	234	336.8	802.0
153	333	391	226	502	234	337.0	801.9
154	334	391	226	500	234	336.9	801.8
155	334	391	226	498	235	336.8	802.0
156	335	391	227	497	235	336.9	801.2
157	336	391	227	495	235	336.8	800.1
158	336	392	228	494	235	337.1	797.5
159	337	392	228	493	235	336.9	791.6
160	338	392	229	491	236	337.0	786.1
161	338	392	230	489	236	337.0	781.7
162	339	392	230	487	236	336.8	778.0
163	340	392	231	486	236	336.7	775.5
164	340	392	231	484	236	336.6	774.1
165	341	392	231	483	237	336.6	773.6
166	342	391	232	481	237	336.5	773.9
167	342	391	232	480	237	336.5	773.2
168	343	391	232	479	237	336.4	771.1
169	344	391	233	477	237	336.4	766.7
170	344	391	234	477	238	336.6	760.5
171	345	391	234	475	238	336.4	755.1
172	346	390	234	474	238	336.3	751.6
173	346	390	234	472	238	336.1	749.5
174	347	389	234	471	238	335.8	747.5
175	347	389	236	470	238	336.0	745.9
176	347	389	236	468	239	335.8	744.0
177	348	389	236	467	239	335.6	742.5
178	348	388	237	465	239	335.5	741.0
179	348	388	237	464	239	335.2	739.7
180	349	388	238	463	239	335.1	738.6
181	350	387	238	461	239	335.0	738.2
182	350	387	239	460	239	334.9	738.2
183	350	387	239	458	239	334.7	737.8
184	351	386	239	457	239	334.4	736.8
185	351	386	239	456	239	334.1	735.9
186	351	386	240	454	239	333.9	734.8
187	351	385	240	453	239	333.6	733.2
188	351	384	240	451	239	333.2	731.7
189	352	384	241	450	239	333.0	730.4
190	352	383	241	448	239	332.6	729.5
191	352	383	240	447	239	332.1	728.9

WOODSTOVE SURFACE TEMPERATURE DATA

Client: IHP
Model: I3000
Run #: 8

Job #: 23-229
Tracking #: 169
Technician: AK
Date: 12/21/2023

Stove ΔT: 22

	Temperature Data (°F)						
Elapsed Time (min)	FB Left	FB Right	FB Back	FB Top	FB Bottom	Stove Surface Average	Catalyst Exit
192	352	382	240	446	239	331.8	728.2
193	352	381	241	445	238	331.4	727.8
194	352	381	240	444	238	331.0	727.4
195	352	380	241	443	238	330.6	727.2
196	352	379	241	442	238	330.2	726.9
197	352	379	241	441	237	330.0	726.9
198	352	378	241	440	237	329.6	726.7
199	352	377	241	439	237	329.3	726.7
200	352	377	241	438	237	329.0	726.8
201	352	376	242	438	237	328.8	726.7
202	352	376	242	437	236	328.4	726.4
203	352	375	242	436	236	328.2	725.6
204	352	374	242	435	236	327.9	724.7
205	351	374	242	435	236	327.5	724.3
206	351	373	242	434	236	327.2	724.5
207	351	373	242	433	235	326.8	725.0
208	350	372	242	433	235	326.5	725.4
209	350	372	242	432	235	326.2	725.6
210	350	372	242	432	235	325.8	725.4
211	350	371	242	431	235	325.6	722.6
212	349	371	242	430	234	325.1	717.8
213	348	370	242	429	234	324.7	713.9
214	348	370	241	428	234	324.3	711.2
215	347	369	241	427	234	323.8	709.1
216	347	369	242	426	234	323.4	707.7
217	347	368	241	425	234	322.9	707.0
218	346	367	241	424	234	322.6	707.4
219	346	367	241	423	235	322.2	708.3
220	346	366	241	422	235	321.8	709.0
221	345	366	240	421	235	321.3	709.2
222	345	365	240	420	235	321.1	709.4
223	345	365	240	419	235	320.8	709.8
224	345	365	240	419	235	320.5	709.9
225	344	364	239	418	235	320.1	710.2
226	344	364	239	417	235	319.8	710.3
227	343	363	239	417	235	319.3	709.9
228	343	363	239	416	235	318.9	709.7
229	342	363	238	416	235	318.7	709.3
230	342	362	238	415	235	318.5	709.0
231	342	362	238	415	235	318.1	708.6
232	341	361	238	414	234	317.8	708.8
233	341	361	237	414	234	317.5	709.2
234	341	361	237	413	234	317.2	709.4
235	341	360	237	412	234	316.8	709.2
Average	324.3	372.0	220.1	524.9	253.3	338.9	824.7

LAB SAMPLE DATA - ASTM E2515

Client: IHP
Model: I3000
Run #: 8

Job #: 23-229
Tracking #: 169
Technician: AK
Date: 12/21/2023

		Sample ID	Tare, mg	Final, mg	Catch, mg
Filters	**A**	G00799	231.2	235.1	3.9
	B	G00800	232.1	235.8	3.7
	C - 1st Hour	G00801	231.3	232.5	1.2
	Amb	G00802	231.3	231.6	0.3
Probes	**A**	14A	116633.2	116634.0	0.8
	B	14B	116619.3	116620.4	1.1
	C - 1st Hour	14C	116530.4	116531.1	0.7
O-rings	**A**	14A	3366.4	3366.4	0.0
	B	14B	3341.5	3341.6	0.1
	C - 1st Hour	14C	3445.0	3445.3	0.3

Placed in Dessicator on:	12/21/2023

Balance Audit (mg):		200.0		200.0				
		Weight (mg)	Date/Time	Weight (mg)	Date/Time	Weight (mg)	Date/Time	Weight (mg)	Date/Time
Filters	**A**	234.9	12/27 9:30	235.1	1/2 12:00				
	B	235.9	12/27 9:30	235.8	1/2 12:00				
	C - 1st Hour	232.7	12/27 9:30	232.5	1/2 12:00				
	Amb	231.8	12/27 9:30	231.6	1/2 12:00				
Probes	**A**	116634.2	12/27 9:30	116634.0	1/2 12:00				
	B	116620.5	12/27 9:30	116620.4	1/2 12:00				
	C - 1st Hour	116531.3	12/27 9:30	116531.1	1/2 12:00				
O-Rings	**A**	3366.4	12/27 9:30	3366.4	1/2 12:00				
	B	3341.5	12/27 9:30	3341.6	1/2 12:00				
	C - 1st Hour	3445.4	12/27 9:30	3445.3	1/2 12:00				

Train A Aggregate, mg:	**4.7**
Train B Aggregate, mg:	**4.9**
Train C Aggregate, mg:	**2.2**
Ambient, mg:	**0.3**

ASTM E2780 Wood Heater Run Sheets

Client: FPI Job Number: 23-229 Tracking #: 169
Model: I3000 Run Number: 8 Test Date: 12/21/23

Wood Heater Run Notes

Test Control Settings

Primary Air Setting(s): Open 0.516”
Targeted Burn Category: III

Preburn Notes

Time	Notes
65:00 80:00	Removed 0.35lb of coals PB end

Test Notes

Test Burn Start Time: 12:32 Test Fuel Loaded by: 30 seconds
Door Closed: 35 seconds Air Control Set at: 300 seconds
Other Loading Notes: Bypass open while door open, fan set to high @ 15 min

Time	Notes
	-None-

Test Burn End Time: 16:27

Flue Gas Concentration Measurement

Calibration Gas Values: Span Gas CO_2 (%): 16.98 CO (%): 4.30
Mid Gas CO_2 (%): 10.00 CO (%): 2.51

Calibration Results:

	Pre Test			Post Test		
	Zero	Span	Mid	Zero	Span	Mid
Time	12/20 15:15	12/20 15:16	12/20 15:17	16: 43	16:44	16:46
CO_2	-0.08	16.92	10.04	-0.10	16.90	10.00
CO	-0.032	4.243	2.493	-0.036	4.228	2.488

Flue Gas Probe Leak Check: Initial: No Leakage Final: No Leakage

Technician Signature: Date: 12/21/23

ASTM E2780 Wood Heater Run Sheets

Client: FPI Job Number: 23-229 Tracking #: 169
Model: I3000 Run Number: 8 Test Date: 12/21/23

Test Fuel Front/Side View

Test Fuel Iso View

Test Fuel Loaded in Stove

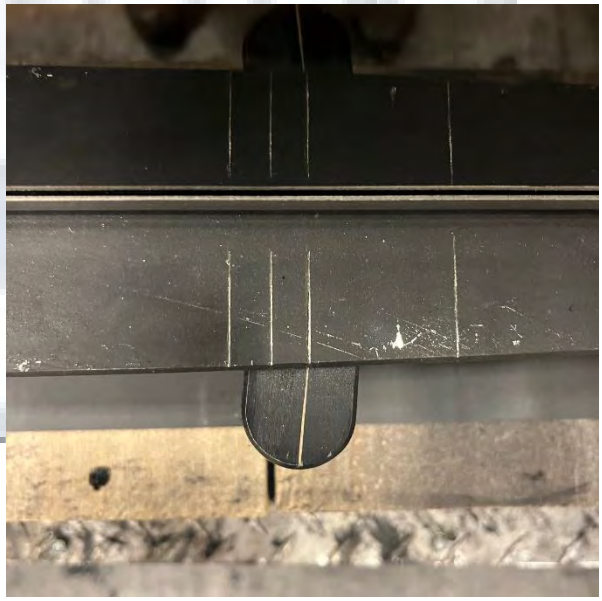

Air Setting

Technician Signature: Date: 12/21/23

WOOD STOVE TEST DATA PACKET
ASTM E2780/E2515

Run 9 Data Summary

Client:	IHP
Model:	I3000
Job #:	23-229
Tracking #:	169
Test Date:	12/22/2023

1/29/2024

Techician Signature Date

TEST RESULTS - ASTM E2780 / ASTM E2515

Client: IHP
Model: I3000
Run #: 9

Job #: 23-229
Tracking #: 169
Technician: AK
Date: 12/22/2023

Burn Rate (kg/hr):	1.17

	Ambient Sample	Sample Train A	Sample Train B	1st Hour Filter
Total Sample Volume (ft^3)	36.224	65.672	62.439	8.761
Average Gas Velocity in Dilution Tunnel (ft/sec)	19.5			
Average Gas Flow Rate in Dilution Tunnel (dscf/hr)	13032.9			
Average Gas Meter Temperature (°F)	67.3	93.6	92.6	75.6
Total Sample Volume (dscf)	36.417	63.507	60.454	8.761
Average Tunnel Temperature (°F)	87.9			
Total Time of Test (min)	343			
Total Particulate Catch (mg)	0.0	3.5	3.5	1.3
Particulate Concentration, dry-standard (g/dscf)	0.0000000	0.0000551	0.0000579	0.0001484
Total PM Emissions (g)	0.00	4.11	4.31	1.93
Particulate Emission Rate (g/hr)	0.00	0.72	0.75	1.93
Emissions Factor (g/kg)	-	0.61	0.65	-
Difference from Average Total Particulate Emissions (g)	-	0.10	0.10	-
Difference from Average Total Particulate Emissions (%)	-	2.5%	2.5%	
Difference from Average Emissions Factor (g/kg)	-	0.02	0.02	-

Final Average Results	
Total Particulate Emissions (g)	4.21
Particulate Emission Rate (g/hr)	0.74
Emissions Factor (g/kg)	0.63
HHV Efficiency (%)	77.6%
LHV Efficiency (%)	83.9%
CO Emissions (g/min)	0.46

Quality Checks	Requirement	Observed	Result
Dual Train Precision	Each train within 7.5% of average emissions (in grams), or emission factors within 0.5 g/kg	See Above	OK
Filter Temps	<90 °F	79.8	OK
Face Velocity	< 30 ft/min	10.8	OK
Leakage Rate	Less than 4% of average sample rate	0 cfm	OK
Ambient Temp	55-90 °F	Min:64.1/Max:69.2	OK
Negative Probe Weight Evaluation	<5% of Total Catch	Probe Catch Not Negative	OK
Pro-Rate Variation	90% of readings between 90-110%; none greater than 120% or less than 80%	See Data Tabs	OK
Stove Surface ΔT	<126°F	78.6	OK

B415.1 Efficiency Results

Manufacturer:	IHP
Model:	I3000
Date:	12/22/23
Run:	9
Control #:	23-229
Test Duration:	343
Output Category:	2

Test Results in Accordance with CSA B415.1-09

	HHV Basis	LHV Basis
Overall Efficiency	77.6%	83.9%
Combustion Efficiency	98.6%	98.6%
Heat Transfer Efficiency	78.8%	85.1%

Output Rate (kJ/h)	17,774	16,861	**(Btu/h)**
Burn Rate (kg/h)	1.16	2.55	**(lb/h)**
Input (kJ/h)	22,893	21,716	**(Btu/h)**

Test Load Weight (dry kg)	6.61	14.56	**dry lb**
MC wet (%)	17.55		
MC dry (%)	21.29		
Particulate (g)	4.21		
CO (g)	159		
Test Duration (h)	5.72		

Emissions	Particulate	CO
g/MJ Output	0.04	1.57
g/kg Dry Fuel	0.64	24.13
g/h	0.74	27.89
g/min	0.01	0.46
lb/MM Btu Output	0.10	3.65

Air/Fuel Ratio (A/F)	14.86

VERSION: **2.4** **4/15/2010**

WOODSTOVE FUEL DATA - ASTM E2780

Client: IHP
Model: I3000
Run #: 9

Job #: 23-229
Tracking #: 169
Technician: AK
Date: 12/22/2023

Preburn Fuel Information						
Size	Length (in)	Moisture Content (% DB)		Size	Length (in)	Moisture Content (% DB)
2x4	17.00	22.6		2x4	20.00	23.9
2x4	17.00	20.4				
2x4	17.00	23.9				
2x4	17.00	20.6				
2x4	17.00	22.4				
2x4	17.00	19.7				
2x4	20.00	20.2				
2x4	20.00	24.6				
Total Fuel Weight (lbs):		18.3		Average Moisture (%DB):		22.0

Firebox Volume (ft^3):	2.75
Total 2x4 Crib Weight, with spacers (lbs):	9.24
Total 4x4 Crib Weight, with spacers (lbs):	8.49
Total Wet Fuel Weight, with spacers (lbs):	17.73

Coal Bed Range (20-25%):
Min (lbs): 3.55
Max (lbs): 4.43

Test Fuel Information						
Size	Length (in)	Weight (lbs)	Moisture Content (%DB)			Dry Weight (lbs)
4x4	17.00	3.81	20.4	19.9	19.7	3.18
4x4	18.50	4.28	21.3	19.0	19.2	3.57
2x4	17.00	1.68	22.2	24.3	24.3	1.36
2x4	18.50	1.74	19.4	19.9	23.8	1.44
2x4	20.00	2.07	23.2	20.4	19.9	1.71
2x4	20.00	2.43	19.2	22.8	24.3	1.99
					Total Dry Weight, no spacers (lbs):	13.24
					Total Dry Weight, with spacers (lbs):	14.73

Spacer Moisture Readings (%DB)							
19.2	16.5	13.8					
18.2	14.3	17.0					
17.5	16.7						
13.5	12.2						
16.2	15.0						
12.5	14.2						
19.8	13.6						
13.6	14.2						

Quality Checks	Requirement	Observed	Result
Fuel Density	25 - 36 (lbs/ft^3, DB)	27.5	OK
Loading Density	6.3 - 7.7 (lbs/ft^3, WB)	6.45	OK
2x4 Fuel Mix	35 - 65 % of total weight	52%	OK

DILUTION TUNNEL & MISC. DATA - ASTM E2780 / E2515

Client:	IHP	Job #:	23-229
Model:	I3000	Tracking #:	169
Run #:	9	Technician:	AK
Test Start Time:	13:27	Date:	12/22/2023

Total Sampling Time (min):	343	
Recording Interval (min):	1	
Meter Box γ Factor:	1.004	(A)
Meter Box γ Factor:	1.004	(B)
Meter Box γ Factor:	1.011	(C)
Meter Box γ Factor:	1.003	(Ambient)
Induced Draft Check (in. H_2O):	0	
Smoke Capture Check (%):	100%	
Date Flue Pipe Last Cleaned:	11/13/2023	
Test Fuel Scale Audit (lbs)	10.00	
Platform Scale Audit (lbs)	10.0	

	Pre-Test	Post Test	Avg.
Barometric Pressure (in. Hg)	29.95	29.97	29.96
Relative Humidity (%)	31.8	27.6	
Room Air Velocity (ft/min)	<50	<50	
Pitot Tube Leak Check	0	0	
Ambient Sample Volume:		36.224	ft^3

Sample Train Leak Checks

	Pre-test	Post-test			
(A)	0.001	0.000	cfm @	-6	in. Hg
(B)	0.000	0.000	cfm @	-5	in. Hg
(C)	0.000	0.000	cfm @	-6	in. Hg
(Ambient)	0.000	0.000	cfm @	-13	in. Hg

DILUTION TUNNEL FLOW

Traverse Data

Point	dP (in H_2O)	Temp (°F)
1	0.078	94
2	0.092	94
3	0.096	94
4	0.078	94
5	0.068	94
6	0.092	94
7	0.090	94
8	0.074	94
Center	0.090	94

Dilution Tunnel H_2O:	2.00	percent
Tunnel Diameter:	6	inches
Pitot Tube Cp:	0.99	[unitless]
Dilution Tunnel MW(dry):	29.00	lb/lb-mole
Dilution Tunnel MW(wet):	28.78	lb/lb-mole
Tunnel Area:	0.1963	ft^2
V_{strav}:	19.58	ft/sec
V_{scent}:	20.36	ft/sec
F_p:	0.962	[ratio]
Initial Tunnel Flow:	215.6	scf/min

Static Pressure: -0.160 in. H_2O

TEST FUEL PROPERTIES

Fuel Load Configuration

Firebox Front

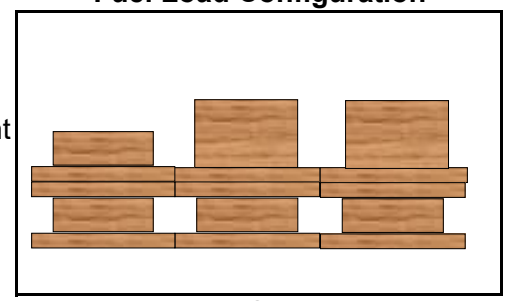

Firebox Back

Firebox Side View

Actual Fuel Used Properties

Fuel Type:	D. Fir
HHV (kJ/kg)	19,810
%C	48.73
%H	6.87
%O	43.9
%Ash	0.5
MC (%DB)	21.3

WOODSTOVE PREBURN DATA - ASTM E2780

Client: IHP
Model: I3000
Run #: 9

Job #: 23-229
Tracking #: 169
Technician: AK
Date: 12/22/2023

Recording Interval (min): 1
Run Time (min): 60

			Temperatures (°F)							
Elapsed Time (min)	Scale Reading (lbs)	Flue Draft (in H_2O)	FB Left	FB Right	FB Back	FB Top	FB Bottom	Stove Surface Average	Flue	Ambient
0	5.50	-0.068	419	433	279	689	406	445.4	420	65
1	5.49	-0.066	420	435	280	683	408	445.1	385	65
2	5.44	-0.067	421	436	282	673	410	444.5	367	66
3	5.42	-0.068	423	437	282	665	412	443.5	356	66
4	5.40	-0.066	424	438	284	657	413	443.2	349	66
5	5.37	-0.065	425	439	284	646	415	441.9	344	66
6	5.35	-0.063	425	440	286	640	417	441.5	338	66
7	5.33	-0.062	425	440	287	639	418	441.9	334	66
8	5.30	-0.062	425	440	288	632	420	440.9	331	66
9	5.26	-0.063	425	440	289	625	421	440.0	328	66
10	5.25	-0.063	425	440	290	617	423	438.9	324	66
11	5.22	-0.061	425	440	290	611	424	437.9	323	65
12	5.20	-0.062	423	440	291	604	426	436.5	319	65
13	5.18	-0.061	423	439	291	596	427	435.0	317	65
14	5.15	-0.060	422	439	292	592	428	434.5	314	65
15	5.13	-0.060	421	438	292	586	429	433.3	313	65
16	5.10	-0.059	419	437	292	580	430	431.7	310	65
17	5.08	-0.059	418	437	293	574	431	430.5	308	65
18	5.06	-0.059	417	436	293	568	432	429.2	306	64
19	5.04	-0.059	416	435	292	564	433	428.1	303	64
20	5.02	-0.058	415	434	293	559	433	427.0	304	65
21	5.00	-0.057	414	434	294	554	434	425.7	300	64
22	4.96	-0.058	413	433	293	550	435	424.4	299	64
23	4.94	-0.058	412	432	294	545	435	423.4	298	64
24	4.92	-0.057	410	431	293	540	436	422.0	296	64
25	4.89	-0.057	409	430	293	537	436	421.0	295	64
26	4.87	-0.058	407	429	293	533	436	419.8	294	64
27	4.86	-0.058	406	428	293	530	437	418.5	291	64
28	4.83	-0.056	405	428	292	526	437	417.6	290	64
29	4.80	-0.056	404	427	293	523	437	416.9	289	64
30	4.78	-0.055	403	425	293	520	438	415.7	289	64
31	4.75	-0.055	402	425	293	517	438	414.7	288	64
32	4.72	-0.055	401	424	293	513	438	413.7	287	64
33	4.70	-0.054	400	423	292	511	439	412.7	285	64
34	4.67	-0.055	398	422	292	508	439	411.7	285	64
35	4.65	-0.055	397	421	292	505	439	410.8	284	64
36	4.62	-0.054	396	420	292	503	440	409.9	283	64
37	4.60	-0.055	395	419	291	500	440	408.9	282	63
38	4.56	-0.054	394	418	291	498	441	408.2	282	63
39	4.54	-0.054	393	417	291	495	441	407.4	280	63
40	4.52	-0.054	391	416	290	493	441	406.4	280	63
41	4.49	-0.052	390	415	290	492	442	405.7	278	63
42	4.47	-0.054	389	415	290	489	442	405.0	278	63
43	4.45	-0.053	388	414	289	488	443	404.3	277	63
44	4.42	-0.053	388	413	289	486	443	403.8	275	63

WOODSTOVE PREBURN DATA - ASTM E2780

Client: IHP
Model: I3000
Run #: 9

Job #: 23-229
Tracking #: 169
Technician: AK
Date: 12/22/2023

Recording Interval (min): 1
Run Time (min): 60

			Temperatures (°F)							
Elapsed Time (min)	Scale Reading (lbs)	Flue Draft (in H_2O)	FB Left	FB Right	FB Back	FB Top	FB Bottom	Stove Surface Average	Flue	Ambient
45	4.40	-0.054	387	412	289	484	444	403.3	276	63
46	4.36	-0.053	386	411	289	482	444	402.5	274	63
47	4.34	-0.053	386	410	289	481	445	402.1	274	63
48	4.32	-0.053	385	410	288	479	446	401.5	273	63
49	4.30	-0.052	384	409	288	478	446	401.0	273	63
50	4.28	-0.052	383	408	288	476	447	400.6	272	63
51	4.25	-0.052	382	407	288	475	448	400.0	271	63
52	4.23	-0.052	382	406	289	473	449	399.6	270	63
53	4.20	-0.052	382	406	288	472	449	399.3	270	63
54	4.18	-0.050	381	405	287	470	450	398.7	269	63
55	4.16	-0.052	380	404	288	469	451	398.3	268	63
56	4.14	-0.052	379	404	288	468	452	397.8	267	63
57	4.11	-0.052	378	403	287	466	452	397.3	267	63
58	4.09	-0.050	377	402	288	465	453	397.1	266	63
59	4.07	-0.052	377	402	287	463	454	396.6	266	63
60	4.05	-0.050	377	401	287	462	454	396.1	265	63

BOX A TEST DATA - ASTM E2780 / ASTM E2515

Client: IHP
Model: I3000
Run #: 9

Job #: 23-229
Tracking #: 169
Technician: AK
Date: 12/22/2023

	Particulate Sampling Data							Fuel Weight (lb)		Temperature Data (°F)			
Elapsed Time (min)	Gas Meter (ft^3)	Sample Rate (cfm)	Dilution Tunnel dP (in H_2O)	Orifice dH (in H_2O)	Meter Temp (°F)	Meter Vacuum (in Hg)	Pro. Rate (%)	Scale Reading	Weight Change	Dilution Tunnel	Flue	Filter	Ambient
0	0.000		0.089	0.54	72	0.7		17.66		98	335	68	64
1	0.125	0.125	0.089	3.06	72	1.1	-	17.61	-0.05	110	367	70	65
2	0.297	0.172	0.089	3.10	72	1.2	-	17.46	-0.15	102	344	71	65
3	0.472	0.175	0.090	3.12	72	1.1	-	17.29	-0.17	102	356	71	
4	0.646	0.174	0.088	3.15	72	1.1	-	17.11	-0.18	103	378	72	65
5	0.817	0.171	0.090	3.16	72	1.1	-	16.90	-0.21	104	399	72	66
6	0.992	0.175	0.088	3.19	72	1.2	-	16.79	-0.11	98	374	72	66
7	1.166	0.174	0.089	3.20	72	1.2	-	16.70	-0.09	96	358	73	66
8	1.345	0.179	0.089	3.23	72	1.2	-	16.60	-0.10	95	347	73	66
9	1.518	0.173	0.089	3.24	72	1.2	-	16.49	-0.11	95	340	73	66
10	1.695	0.177	0.089	3.25	72	1.2	93	16.38	-0.11	95	337	73	66
11	1.872	0.177	0.087	3.27	73	1.1	-	16.27	-0.11	94	336	73	67
12	2.049	0.177	0.091	3.28	73	1.2	-	16.15	-0.12	94	336	74	67
13	2.227	0.178	0.090	3.28	73	1.2	-	16.01	-0.14	94	339	74	67
14	2.404	0.177	0.091	3.30	73	1.2	-	15.87	-0.14	94	341	74	67
15	2.582	0.178	0.089	3.31	73	1.2	-	15.75	-0.12	94	344	74	67
16	2.769	0.187	0.088	3.35	74	1.1	-	15.63	-0.12	95	346	74	67
17	2.945	0.176	0.089	3.34	74	1.2	-	15.48	-0.15	95	349	74	67
18	3.123	0.178	0.088	3.35	74	1.2	-	15.36	-0.12	95	351	75	67
19	3.302	0.179	0.088	3.35	75	1.2	-	15.22	-0.14	95	354	75	67
20	3.483	0.181	0.091	3.36	75	1.2	98	15.08	-0.14	95	357	75	67
21	3.666	0.183	0.090	3.39	75	1.2	-	14.94	-0.14	95	358	75	67
22	3.848	0.182	0.090	3.40	75	1.1	-	14.79	-0.15	95	360	75	67
23	4.026	0.178	0.091	3.41	76	1.2	-	14.67	-0.12	95	362	75	68
24	4.207	0.181	0.092	3.40	76	1.2	-	14.51	-0.16	95	362	75	68
25	4.391	0.184	0.090	3.43	76	1.2	-	14.37	-0.14	94	362	75	68
26	4.575	0.184	0.090	3.43	77	1.2	-	14.23	-0.14	94	363	75	68
27	4.758	0.183	0.089	3.44	77	1.2	-	14.08	-0.15	95	363	76	68
28	4.941	0.183	0.090	3.46	77	1.2	-	13.95	-0.13	96	363	76	68
29	5.122	0.181	0.088	3.46	78	1.2	-	13.81	-0.14	96	364	76	68
30	5.304	0.182	0.091	3.46	78	1.2	98	13.66	-0.15	96	364	76	68
31	5.490	0.186	0.089	3.48	79	1.2	-	13.52	-0.14	96	364	76	68

BOX A TEST DATA - ASTM E2780 / ASTM E2515

Client: IHP
Model: I3000
Run #: 9

Job #: 23-229
Tracking #: 169
Technician: AK
Date: 12/22/2023

	Particulate Sampling Data							Fuel Weight (lb)		Temperature Data (°F)			
Elapsed Time (min)	Gas Meter (ft^3)	Sample Rate (cfm)	Dilution Tunnel dP (in H_2O)	Orifice dH (in H_2O)	Meter Temp (°F)	Meter Vacuum (in Hg)	Pro. Rate (%)	Scale Reading	Weight Change	Dilution Tunnel	Flue	Filter	Ambient
32	5.677	0.187	0.088	3.46	79	1.2	-	13.36	-0.16	96	365	76	68
33	5.859	0.182	0.089	3.48	79	1.2	-	13.22	-0.14	96	366	76	68
34	6.044	0.185	0.089	3.49	80	1.2	-	13.05	-0.17	96	368	76	68
35	6.230	0.186	0.090	3.48	80	1.2	-	12.91	-0.14	95	369	76	68
36	6.411	0.181	0.090	3.50	80	1.2	-	12.76	-0.15	95	370	76	68
37	6.596	0.185	0.090	3.51	81	1.2	-	12.63	-0.13	96	370	76	68
38	6.782	0.186	0.089	3.50	81	1.2	-	12.48	-0.15	96	371	77	68
39	6.969	0.187	0.089	3.51	81	1.2	-	12.34	-0.14	96	372	77	68
40	7.155	0.186	0.089	3.52	82	1.2	100	12.19	-0.15	96	372	77	68
41	7.344	0.189	0.089	3.52	82	1.2	-	12.05	-0.14	96	372	77	69
42	7.524	0.180	0.090	3.52	82	1.2	-	11.92	-0.13	96	370	77	69
43	7.710	0.186	0.090	3.53	83	1.3	-	11.80	-0.12	95	367	77	69
44	7.896	0.186	0.092	3.53	83	1.2	-	11.68	-0.12	95	365	77	69
45	8.084	0.188	0.089	3.54	83	1.2	-	11.56	-0.12	95	364	77	69
46	8.272	0.188	0.090	3.55	84	1.2	-	11.44	-0.12	95	362	77	69
47	8.458	0.186	0.090	3.55	84	1.2	-	11.33	-0.11	94	360	77	69
48	8.647	0.189	0.087	3.54	84	1.2	-	11.22	-0.11	94	361	77	69
49	8.831	0.184	0.087	3.54	85	1.2	-	11.12	-0.10	94	360	77	69
50	9.018	0.187	0.090	3.56	85	1.2	100	11.01	-0.11	95	359	77	69
51	9.204	0.186	0.090	3.55	85	1.3	-	10.90	-0.11	94	358	77	69
52	9.394	0.190	0.089	3.57	86	1.3	-	10.79	-0.11	94	357	77	69
53	9.585	0.191	0.089	3.56	86	1.3	-	10.68	-0.11	94	356	77	69
54	9.771	0.186	0.087	3.59	86	1.2	-	10.58	-0.10	94	355	77	69
55	9.959	0.188	0.090	3.57	86	1.2	-	10.47	-0.11	94	355	77	69
56	10.148	0.189	0.091	3.58	87	1.2	-	10.36	-0.11	94	356	77	69
57	10.335	0.187	0.089	3.57	87	1.2	-	10.25	-0.11	94	357	77	69
58	10.521	0.186	0.089	3.58	87	1.2	-	10.12	-0.13	94	359	77	69
59	10.710	0.189	0.089	3.58	88	1.2	-	9.99	-0.13	94	358	77	69
60	10.899	0.189	0.088	3.59	88	1.2	101	9.88	-0.11	94	356	77	69
61	11.089	0.190	0.092	3.59	88	1.2	-	9.77	-0.11	94	353	77	69
62	11.278	0.189	0.089	3.58	88	1.3	-	9.66	-0.11	95	353	77	69
63	11.469	0.191	0.090	3.60	88	1.2	-	9.55	-0.11	95	353	77	69

BOX A TEST DATA - ASTM E2780 / ASTM E2515

Client: IHP
Model: I3000
Run #: 9

Job #: 23-229
Tracking #: 169
Technician: AK
Date: 12/22/2023

	Particulate Sampling Data							Fuel Weight (lb)		Temperature Data (°F)			
Elapsed Time (min)	Gas Meter (ft^3)	Sample Rate (cfm)	Dilution Tunnel dP (in H_2O)	Orifice dH (in H_2O)	Meter Temp (°F)	Meter Vacuum (in Hg)	Pro. Rate (%)	Scale Reading	Weight Change	Dilution Tunnel	Flue	Filter	Ambient
64	11.658	0.189	0.088	3.59	89	1.2	-	9.45	-0.10	94	351	77	69
65	11.850	0.192	0.088	3.61	89	1.3	-	9.35	-0.10	94	351	77	69
66	12.040	0.190	0.089	3.61	89	1.2	-	9.25	-0.10	94	350	77	69
67	12.220	0.180	0.091	3.60	89	1.2	-	9.14	-0.11	94	348	77	69
68	12.414	0.194	0.088	3.61	90	1.2	-	9.06	-0.08	94	347	77	69
69	12.602	0.188	0.086	3.60	90	1.2	-	8.98	-0.08	93	345	77	69
70	12.793	0.191	0.088	3.61	90	1.3	102	8.89	-0.09	93	343	77	69
71	12.984	0.191	0.090	3.62	90	1.3	-	8.81	-0.08	93	341	77	69
72	13.174	0.190	0.090	3.62	90	1.2	-	8.73	-0.08	93	341	77	69
73	13.367	0.193	0.090	3.62	91	1.2	-	8.64	-0.09	93	339	77	69
74	13.556	0.189	0.091	3.63	91	1.2	-	8.56	-0.08	93	340	77	69
75	13.746	0.190	0.090	3.62	91	1.3	-	8.46	-0.10	93	342	77	69
76	13.937	0.191	0.089	3.62	91	1.2	-	8.36	-0.10	93	342	77	69
77	14.125	0.188	0.089	3.62	91	1.2	-	8.28	-0.08	94	341	77	69
78	14.316	0.191	0.090	3.63	92	1.3	-	8.19	-0.09	94	341	77	69
79	14.506	0.190	0.090	3.63	92	1.2	-	8.10	-0.09	94	341	77	69
80	14.693	0.187	0.092	3.62	92	1.3	100	8.01	-0.09	94	342	77	69
81	14.886	0.193	0.091	3.61	92	1.2	-	7.93	-0.08	94	342	77	69
82	15.083	0.197	0.089	3.64	92	1.3	-	7.81	-0.12	93	342	77	69
83	15.272	0.189	0.089	3.64	92	1.2	-	7.72	-0.09	93	343	77	69
84	15.464	0.192	0.090	3.64	92	1.2	-	7.62	-0.10	93	343	77	69
85	15.655	0.191	0.087	3.64	93	1.2	-	7.52	-0.10	93	342	77	69
86	15.845	0.190	0.089	3.65	93	1.3	-	7.42	-0.10	93	344	77	69
87	16.038	0.193	0.091	3.64	93	1.2	-	7.32	-0.10	93	343	77	69
88	16.227	0.189	0.090	3.65	93	1.2	-	7.23	-0.09	93	342	77	69
89	16.417	0.190	0.091	3.64	93	1.2	-	7.13	-0.10	94	340	77	69
90	16.610	0.193	0.091	3.65	93	1.3	100	7.05	-0.08	93	341	77	69
91	16.801	0.191	0.090	3.65	94	1.2	-	6.97	-0.08	93	340	77	69
92	16.993	0.192	0.089	3.66	94	1.3	-	6.88	-0.09	93	337	77	69
93	17.183	0.190	0.090	3.65	94	1.2	-	6.81	-0.07	93	338	77	69
94	17.378	0.195	0.090	3.65	94	1.2	-	6.74	-0.07	93	335	77	69
95	17.570	0.192	0.089	3.66	94	1.2	-	6.66	-0.08	93	333	77	69

BOX A TEST DATA - ASTM E2780 / ASTM E2515

Client: IHP
Model: I3000
Run #: 9

Job #: 23-229
Tracking #: 169
Technician: AK
Date: 12/22/2023

	Particulate Sampling Data							Fuel Weight (lb)		Temperature Data (°F)			
Elapsed Time (min)	Gas Meter (ft^3)	Sample Rate (cfm)	Dilution Tunnel dP (in H_2O)	Orifice dH (in H_2O)	Meter Temp (°F)	Meter Vacuum (in Hg)	Pro. Rate (%)	Scale Reading	Weight Change	Dilution Tunnel	Flue	Filter	Ambient
96	17.766	0.196	0.090	3.65	94	1.2	-	6.58	-0.08	93	334	77	69
97	17.955	0.189	0.090	3.65	94	1.2	-	6.50	-0.08	93	334	77	69
98	18.147	0.192	0.090	3.65	94	1.2	-	6.42	-0.08	93	333	77	68
99	18.340	0.193	0.090	3.66	94	1.2	-	6.36	-0.06	92	332	77	68
100	18.530	0.190	0.090	3.65	95	1.2	101	6.28	-0.08	92	333	77	68
101	18.720	0.190	0.091	3.64	95	1.2	-	6.19	-0.09	93	333	77	68
102	18.913	0.193	0.090	3.66	95	1.2	-	6.13	-0.06	92	331	77	69
103	19.108	0.195	0.090	3.66	95	1.3	-	6.06	-0.07	93	332	77	68
104	19.296	0.188	0.089	3.65	95	1.2	-	5.99	-0.07	92	331	77	68
105	19.489	0.193	0.089	3.64	95	1.3	-	5.91	-0.08	92	330	77	69
106	19.682	0.193	0.091	3.65	95	1.2	-	5.83	-0.08	92	330	77	68
107	19.875	0.193	0.090	3.66	95	1.2	-	5.76	-0.07	92	328	77	68
108	20.068	0.193	0.091	3.67	95	1.3	-	5.68	-0.08	92	325	77	69
109	20.259	0.191	0.092	3.67	95	1.2	-	5.64	-0.04	91	324	77	68
110	20.455	0.196	0.090	3.66	96	1.3	101	5.56	-0.08	92	322	77	69
111	20.643	0.188	0.091	3.67	96	1.2	-	5.51	-0.05	91	321	77	68
112	20.840	0.197	0.090	3.68	96	1.2	-	5.45	-0.06	91	320	77	68
113	21.036	0.196	0.089	3.68	96	1.3	-	5.39	-0.06	91	319	77	68
114	21.223	0.187	0.089	3.66	96	1.2	-	5.33	-0.06	91	318	77	68
115	21.415	0.192	0.091	3.67	96	1.3	-	5.28	-0.05	90	317	77	69
116	21.611	0.196	0.093	3.68	96	1.2	-	5.22	-0.06	91	317	77	68
117	21.802	0.191	0.091	3.67	96	1.3	-	5.17	-0.05	91	314	77	69
118	21.993	0.191	0.090	3.67	96	1.2	-	5.12	-0.05	91	313	77	68
119	22.187	0.194	0.091	3.67	96	1.2	-	5.07	-0.05	90	312	77	68
120	22.381	0.194	0.089	3.68	96	1.2	101	5.03	-0.04	90	310	77	68
121	22.578	0.197	0.092	3.68	96	1.2	-	4.98	-0.05	91	307	77	68
122	22.768	0.190	0.091	3.69	96	1.3	-	4.95	-0.03	90	306	77	68
123	22.962	0.194	0.089	3.68	97	1.3	-	4.90	-0.05	90	306	77	68
124	23.156	0.194	0.090	3.68	97	1.3	-	4.87	-0.03	90	304	77	68
125	23.348	0.192	0.089	3.68	97	1.2	-	4.83	-0.04	90	301	77	68
126	23.542	0.194	0.089	3.68	97	1.3	-	4.80	-0.03	90	299	76	68
127	23.736	0.194	0.090	3.68	97	1.2	-	4.76	-0.04	90	298	76	68

BOX A TEST DATA - ASTM E2780 / ASTM E2515

Client: IHP
Model: I3000
Run #: 9

Job #: 23-229
Tracking #: 169
Technician: AK
Date: 12/22/2023

	Particulate Sampling Data							Fuel Weight (lb)		Temperature Data (°F)			
Elapsed Time (min)	Gas Meter (ft^3)	Sample Rate (cfm)	Dilution Tunnel dP (in H_2O)	Orifice dH (in H_2O)	Meter Temp (°F)	Meter Vacuum (in Hg)	Pro. Rate (%)	Scale Reading	Weight Change	Dilution Tunnel	Flue	Filter	Ambient
128	23.928	0.192	0.091	3.67	97	1.2	-	4.72	-0.04	90	298	76	68
129	24.120	0.192	0.091	3.68	97	1.2	-	4.69	-0.03	89	296	76	68
130	24.312	0.192	0.089	3.68	97	1.2	101	4.66	-0.03	89	295	76	68
131	24.507	0.195	0.091	3.69	97	1.2	-	4.61	-0.05	89	292	76	68
132	24.700	0.193	0.092	3.68	97	1.2	-	4.59	-0.02	89	292	76	68
133	24.892	0.192	0.091	3.67	97	1.3	-	4.54	-0.05	89	290	76	68
134	25.084	0.192	0.091	3.69	97	1.2	-	4.51	-0.03	89	289	76	68
135	25.281	0.197	0.090	3.69	97	1.3	-	4.48	-0.03	89	289	76	68
136	25.474	0.193	0.091	3.69	97	1.3	-	4.44	-0.04	88	288	76	68
137	25.668	0.194	0.088	3.69	97	1.2	-	4.41	-0.03	88	287	76	68
138	25.862	0.194	0.091	3.68	97	1.2	-	4.37	-0.04	88	286	76	68
139	26.057	0.195	0.091	3.69	97	1.2	-	4.34	-0.03	88	286	76	68
140	26.250	0.193	0.091	3.70	97	1.2	101	4.30	-0.04	88	285	76	68
141	26.441	0.191	0.092	3.69	97	1.2	-	4.26	-0.04	88	284	76	68
142	26.641	0.200	0.088	3.69	97	1.2	-	4.22	-0.04	88	284	76	68
143	26.831	0.190	0.090	3.68	97	1.2	-	4.19	-0.03	88	284	76	68
144	27.024	0.193	0.091	3.68	98	1.3	-	4.15	-0.04	88	283	76	68
145	27.216	0.192	0.091	3.69	98	1.3	-	4.11	-0.04	87	284	76	68
146	27.413	0.197	0.089	3.69	98	1.3	-	4.06	-0.05	87	284	76	68
147	27.604	0.191	0.090	3.70	98	1.2	-	4.01	-0.05	87	286	76	68
148	27.797	0.193	0.090	3.68	98	1.2	-	3.96	-0.05	87	287	76	68
149	27.994	0.197	0.090	3.68	98	1.3	-	3.91	-0.05	88	287	76	68
150	28.184	0.190	0.089	3.69	98	1.2	101	3.85	-0.06	88	289	76	68
151	28.380	0.196	0.091	3.70	98	1.2	-	3.79	-0.06	88	292	76	68
152	28.576	0.196	0.090	3.69	98	1.2	-	3.73	-0.06	88	296	76	68
153	28.767	0.191	0.091	3.70	98	1.2	-	3.70	-0.03	88	297	76	68
154	28.962	0.195	0.090	3.70	98	1.3	-	3.66	-0.04	88	297	76	68
155	29.159	0.197	0.089	3.70	98	1.2	-	3.61	-0.05	88	296	76	68
156	29.351	0.192	0.091	3.70	98	1.3	-	3.58	-0.03	88	295	76	68
157	29.544	0.193	0.092	3.70	98	1.2	-	3.55	-0.03	88	296	76	68
158	29.738	0.194	0.092	3.70	98	1.3	-	3.50	-0.05	87	296	75	68
159	29.932	0.194	0.089	3.70	98	1.2	-	3.47	-0.03	87	293	75	68

BOX A TEST DATA - ASTM E2780 / ASTM E2515

Client: IHP
Model: I3000
Run #: 9

Job #: 23-229
Tracking #: 169
Technician: AK
Date: 12/22/2023

	Particulate Sampling Data							Fuel Weight (lb)		Temperature Data (°F)			
Elapsed Time (min)	Gas Meter (ft^3)	Sample Rate (cfm)	Dilution Tunnel dP (in H_2O)	Orifice dH (in H_2O)	Meter Temp (°F)	Meter Vacuum (in Hg)	Pro. Rate (%)	Scale Reading	Weight Change	Dilution Tunnel	Flue	Filter	Ambient
160	30.126	0.194	0.089	3.70	98	1.2	101	3.44	-0.03	88	290	75	68
161	30.323	0.197	0.090	3.67	98	1.3	-	3.41	-0.03	88	288	75	68
162	30.515	0.192	0.091	3.69	98	1.2	-	3.37	-0.04	87	286	75	68
163	30.705	0.190	0.090	3.70	98	1.2	-	3.35	-0.02	87	284	75	68
164	30.899	0.194	0.092	3.69	98	1.2	-	3.32	-0.03	87	283	75	68
165	31.093	0.194	0.092	3.69	98	1.2	-	3.29	-0.03	87	281	75	68
166	31.286	0.193	0.088	3.70	98	1.2	-	3.25	-0.04	87	279	75	68
167	31.481	0.195	0.089	3.69	98	1.2	-	3.23	-0.02	87	278	75	68
168	31.676	0.195	0.092	3.69	98	1.2	-	3.20	-0.03	86	276	75	68
169	31.870	0.194	0.092	3.70	98	1.2	-	3.19	-0.01	86	275	75	68
170	32.064	0.194	0.091	3.70	98	1.3	101	3.15	-0.04	87	273	75	67
171	32.259	0.195	0.091	3.70	98	1.3	-	3.13	-0.02	87	271	75	68
172	32.454	0.195	0.090	3.70	98	1.2	-	3.10	-0.03	86	270	75	68
173	32.649	0.195	0.092	3.68	98	1.3	-	3.07	-0.03	86	269	75	68
174	32.842	0.193	0.090	3.71	98	1.2	-	3.05	-0.02	86	269	75	67
175	33.039	0.197	0.091	3.70	98	1.2	-	3.03	-0.02	86	268	75	67
176	33.233	0.194	0.091	3.70	98	1.2	-	3.00	-0.03	86	267	75	68
177	33.424	0.191	0.092	3.69	98	1.2	-	2.99	-0.01	86	266	75	68
178	33.618	0.194	0.091	3.69	98	1.3	-	2.97	-0.02	86	265	75	68
179	33.810	0.192	0.091	3.70	98	1.2	-	2.94	-0.03	86	264	75	67
180	34.004	0.194	0.091	3.70	98	1.2	100	2.92	-0.02	86	263	75	67
181	34.199	0.195	0.091	3.71	98	1.2	-	2.90	-0.02	86	263	75	67
182	34.393	0.194	0.092	3.69	98	1.3	-	2.88	-0.02	86	262	75	67
183	34.586	0.193	0.089	3.70	98	1.2	-	2.86	-0.02	86	262	75	68
184	34.781	0.195	0.090	3.70	98	1.3	-	2.83	-0.03	85	261	75	68
185	34.976	0.195	0.091	3.70	98	1.3	-	2.81	-0.02	85	261	75	67
186	35.171	0.195	0.093	3.70	98	1.3	-	2.80	-0.01	85	260	75	67
187	35.365	0.194	0.091	3.71	98	1.2	-	2.77	-0.03	86	261	75	67
188	35.562	0.197	0.090	3.70	98	1.2	-	2.75	-0.02	86	260	75	67
189	35.757	0.195	0.089	3.70	98	1.2	-	2.73	-0.02	85	259	75	67
190	35.950	0.193	0.092	3.69	98	1.3	100	2.70	-0.03	85	258	75	67
191	36.140	0.190	0.090	3.70	98	1.2	-	2.67	-0.03	85	259	74	67

BOX A TEST DATA - ASTM E2780 / ASTM E2515

Client: IHP
Model: I3000
Run #: 9

Job #: 23-229
Tracking #: 169
Technician: AK
Date: 12/22/2023

	Particulate Sampling Data							Fuel Weight (lb)		Temperature Data (°F)			
Elapsed Time (min)	Gas Meter (ft^3)	Sample Rate (cfm)	Dilution Tunnel dP (in H_2O)	Orifice dH (in H_2O)	Meter Temp (°F)	Meter Vacuum (in Hg)	Pro. Rate (%)	Scale Reading	Weight Change	Dilution Tunnel	Flue	Filter	Ambient
192	36.341	0.201	0.092	3.70	98	1.2	-	2.66	-0.01	84	258	74	67
193	36.528	0.187	0.090	3.71	98	1.2	-	2.64	-0.02	85	258	74	67
194	36.727	0.199	0.089	3.70	98	1.2	-	2.62	-0.02	84	258	74	67
195	36.924	0.197	0.092	3.69	98	1.2	-	2.60	-0.02	85	258	74	67
196	37.109	0.185	0.092	3.70	98	1.2	-	2.58	-0.02	86	257	74	67
197	37.306	0.197	0.092	3.71	98	1.3	-	2.56	-0.02	85	256	74	67
198	37.500	0.194	0.088	3.71	98	1.2	-	2.53	-0.03	85	257	74	67
199	37.695	0.195	0.090	3.71	98	1.3	-	2.52	-0.01	85	256	74	67
200	37.892	0.197	0.091	3.70	98	1.2	100	2.49	-0.03	85	256	74	67
201	38.079	0.187	0.091	3.71	98	1.3	-	2.47	-0.02	85	256	74	67
202	38.277	0.198	0.092	3.70	98	1.3	-	2.45	-0.02	85	257	74	67
203	38.473	0.196	0.091	3.70	98	1.3	-	2.44	-0.01	84	256	74	67
204	38.667	0.194	0.091	3.69	98	1.2	-	2.42	-0.02	85	255	74	67
205	38.864	0.197	0.091	3.70	98	1.3	-	2.40	-0.02	85	255	74	67
206	39.053	0.189	0.090	3.71	98	1.2	-	2.38	-0.02	85	254	74	67
207	39.251	0.198	0.091	3.70	98	1.3	-	2.35	-0.03	85	253	74	67
208	39.446	0.195	0.093	3.70	98	1.2	-	2.33	-0.02	85	253	74	67
209	39.636	0.190	0.090	3.71	98	1.2	-	2.31	-0.02	84	252	74	67
210	39.834	0.198	0.090	3.70	98	1.2	100	2.30	-0.01	84	252	74	67
211	40.028	0.194	0.091	3.69	98	1.2	-	2.27	-0.03	84	250	74	67
212	40.226	0.198	0.092	3.70	98	1.2	-	2.26	-0.01	85	250	74	67
213	40.417	0.191	0.091	3.70	98	1.2	-	2.24	-0.02	84	250	74	67
214	40.609	0.192	0.090	3.71	98	1.2	-	2.22	-0.02	84	249	74	67
215	40.806	0.197	0.091	3.69	98	1.2	-	2.19	-0.03	84	249	74	67
216	40.997	0.191	0.092	3.71	98	1.2	-	2.18	-0.01	84	249	74	67
217	41.192	0.195	0.091	3.70	98	1.2	-	2.16	-0.02	84	249	74	67
218	41.385	0.193	0.090	3.69	98	1.2	-	2.13	-0.03	84	247	74	67
219	41.579	0.194	0.091	3.69	98	1.2	-	2.12	-0.01	84	247	74	67
220	41.777	0.198	0.092	3.70	98	1.3	100	2.09	-0.03	85	248	74	67
221	41.969	0.192	0.090	3.69	98	1.2	-	2.08	-0.01	84	247	74	67
222	42.164	0.195	0.091	3.70	98	1.2	-	2.05	-0.03	84	247	74	67
223	42.357	0.193	0.090	3.68	98	1.2	-	2.03	-0.02	84	248	74	67

BOX A TEST DATA - ASTM E2780 / ASTM E2515

Client: IHP
Model: I3000
Run #: 9

Job #: 23-229
Tracking #: 169
Technician: AK
Date: 12/22/2023

	Particulate Sampling Data							Fuel Weight (lb)		Temperature Data (°F)			
Elapsed Time (min)	Gas Meter (ft^3)	Sample Rate (cfm)	Dilution Tunnel dP (in H_2O)	Orifice dH (in H_2O)	Meter Temp (°F)	Meter Vacuum (in Hg)	Pro. Rate (%)	Scale Reading	Weight Change	Dilution Tunnel	Flue	Filter	Ambient
224	42.553	0.196	0.091	3.70	98	1.2	-	2.02	-0.01	84	247	74	67
225	42.748	0.195	0.090	3.70	98	1.3	-	2.00	-0.02	84	247	74	67
226	42.939	0.191	0.092	3.69	98	1.2	-	1.98	-0.02	83	246	74	67
227	43.137	0.198	0.089	3.70	98	1.2	-	1.96	-0.02	84	246	74	67
228	43.327	0.190	0.091	3.71	98	1.2	-	1.94	-0.02	85	245	74	67
229	43.525	0.198	0.091	3.70	98	1.2	-	1.91	-0.03	84	245	74	67
230	43.719	0.194	0.091	3.70	98	1.2	100	1.90	-0.01	84	246	74	67
231	43.916	0.197	0.091	3.70	98	1.2	-	1.88	-0.02	84	246	74	67
232	44.102	0.186	0.090	3.70	98	1.2	-	1.86	-0.02	84	244	74	67
233	44.299	0.197	0.089	3.71	98	1.2	-	1.84	-0.02	83	245	74	67
234	44.494	0.195	0.090	3.70	98	1.2	-	1.82	-0.02	83	245	73	67
235	44.688	0.194	0.091	3.70	98	1.2	-	1.81	-0.01	83	244	73	67
236	44.877	0.189	0.091	3.69	98	1.2	-	1.79	-0.02	84	244	73	67
237	45.075	0.198	0.092	3.70	98	1.2	-	1.77	-0.02	84	244	74	67
238	45.270	0.195	0.092	3.71	98	1.2	-	1.75	-0.02	84	244	74	67
239	45.463	0.193	0.090	3.71	98	1.2	-	1.72	-0.03	84	244	73	67
240	45.660	0.197	0.093	3.70	98	1.2	99	1.70	-0.02	84	244	73	67
241	45.854	0.194	0.091	3.70	98	1.2	-	1.69	-0.01	83	243	73	67
242	46.046	0.192	0.092	3.71	98	1.2	-	1.67	-0.02	84	243	73	67
243	46.245	0.199	0.094	3.71	98	1.2	-	1.64	-0.03	83	244	73	67
244	46.442	0.197	0.093	3.70	98	1.2	-	1.63	-0.01	84	242	73	67
245	46.632	0.190	0.090	3.70	98	1.3	-	1.62	-0.01	84	243	73	67
246	46.827	0.195	0.093	3.71	98	1.2	-	1.58	-0.04	84	243	73	67
247	47.021	0.194	0.092	3.70	98	1.3	-	1.58	0.00	84	242	73	67
248	47.216	0.195	0.091	3.69	98	1.2	-	1.55	-0.03	84	242	73	67
249	47.409	0.193	0.092	3.70	98	1.3	-	1.54	-0.01	83	242	73	67
250	47.602	0.193	0.092	3.69	98	1.2	99	1.52	-0.02	84	243	73	67
251	47.795	0.193	0.092	3.69	98	1.3	-	1.50	-0.02	83	241	73	67
252	47.991	0.196	0.091	3.70	98	1.2	-	1.48	-0.02	84	241	73	67
253	48.188	0.197	0.093	3.70	98	1.2	-	1.46	-0.02	84	241	73	66
254	48.378	0.190	0.090	3.71	98	1.2	-	1.44	-0.02	84	239	73	67
255	48.572	0.194	0.091	3.70	98	1.2	-	1.42	-0.02	84	240	73	67

BOX A TEST DATA - ASTM E2780 / ASTM E2515

Client: IHP
Model: I3000
Run #: 9

Job #: 23-229
Tracking #: 169
Technician: AK
Date: 12/22/2023

	Particulate Sampling Data							Fuel Weight (lb)		Temperature Data (°F)			
Elapsed Time (min)	Gas Meter (ft^3)	Sample Rate (cfm)	Dilution Tunnel dP (in H_2O)	Orifice dH (in H_2O)	Meter Temp (°F)	Meter Vacuum (in Hg)	Pro. Rate (%)	Scale Reading	Weight Change	Dilution Tunnel	Flue	Filter	Ambient
256	48.765	0.193	0.091	3.70	98	1.3	-	1.40	-0.02	83	239	73	67
257	48.963	0.198	0.090	3.70	98	1.2	-	1.39	-0.01	83	239	73	67
258	49.157	0.194	0.092	3.70	98	1.2	-	1.37	-0.02	83	240	73	67
259	49.354	0.197	0.093	3.69	98	1.2	-	1.36	-0.01	83	239	73	66
260	49.546	0.192	0.090	3.71	98	1.2	100	1.33	-0.03	83	239	73	66
261	49.742	0.196	0.091	3.71	98	1.2	-	1.32	-0.01	84	239	73	66
262	49.936	0.194	0.090	3.71	98	1.2	-	1.30	-0.02	84	238	73	66
263	50.126	0.190	0.088	3.71	98	1.2	-	1.29	-0.01	84	238	73	66
264	50.324	0.198	0.091	3.71	98	1.3	-	1.26	-0.03	83	237	73	66
265	50.518	0.194	0.092	3.72	98	1.2	-	1.24	-0.02	83	236	73	66
266	50.712	0.194	0.094	3.69	98	1.2	-	1.23	-0.01	83	237	73	66
267	50.910	0.198	0.091	3.70	98	1.2	-	1.22	-0.01	83	237	73	66
268	51.102	0.192	0.091	3.69	98	1.3	-	1.19	-0.03	83	236	73	66
269	51.292	0.190	0.090	3.70	98	1.2	-	1.17	-0.02	84	236	73	66
270	51.488	0.196	0.092	3.70	98	1.2	100	1.16	-0.01	84	236	73	66
271	51.681	0.193	0.090	3.71	98	1.2	-	1.14	-0.02	83	236	73	66
272	51.874	0.193	0.089	3.70	98	1.2	-	1.12	-0.02	83	236	73	66
273	52.066	0.192	0.089	3.70	98	1.2	-	1.10	-0.02	83	236	73	66
274	52.265	0.199	0.091	3.71	98	1.2	-	1.09	-0.01	83	236	73	66
275	52.459	0.194	0.089	3.69	98	1.2	-	1.07	-0.02	82	236	73	66
276	52.650	0.191	0.092	3.70	98	1.2	-	1.05	-0.02	83	236	73	66
277	52.848	0.198	0.090	3.70	98	1.2	-	1.04	-0.01	83	236	73	66
278	53.043	0.195	0.089	3.70	98	1.2	-	1.02	-0.02	83	235	73	66
279	53.238	0.195	0.091	3.71	98	1.2	-	1.00	-0.02	83	234	73	66
280	53.433	0.195	0.090	3.71	98	1.2	100	0.99	-0.01	83	235	73	66
281	53.626	0.193	0.090	3.69	98	1.3	-	0.97	-0.02	83	235	73	66
282	53.821	0.195	0.091	3.71	98	1.2	-	0.95	-0.02	82	234	73	66
283	54.016	0.195	0.091	3.70	98	1.3	-	0.93	-0.02	82	235	73	66
284	54.209	0.193	0.091	3.70	98	1.2	-	0.92	-0.01	83	234	73	66
285	54.403	0.194	0.092	3.70	98	1.3	-	0.91	-0.01	83	234	73	66
286	54.596	0.193	0.093	3.71	98	1.2	-	0.89	-0.02	84	234	73	66
287	54.790	0.194	0.091	3.70	98	1.2	-	0.87	-0.02	83	234	73	66

BOX A TEST DATA - ASTM E2780 / ASTM E2515

Client: IHP
Model: I3000
Run #: 9

Job #: 23-229
Tracking #: 169
Technician: AK
Date: 12/22/2023

	Particulate Sampling Data							Fuel Weight (lb)		Temperature Data (°F)			
Elapsed Time (min)	Gas Meter (ft^3)	Sample Rate (cfm)	Dilution Tunnel dP (in H_2O)	Orifice dH (in H_2O)	Meter Temp (°F)	Meter Vacuum (in Hg)	Pro. Rate (%)	Scale Reading	Weight Change	Dilution Tunnel	Flue	Filter	Ambient
288	54.985	0.195	0.088	3.69	98	1.2	-	0.86	-0.01	83	234	73	66
289	55.179	0.194	0.093	3.70	98	1.2	-	0.84	-0.02	83	234	73	66
290	55.369	0.190	0.089	3.71	98	1.2	100	0.82	-0.02	83	234	73	66
291	55.564	0.195	0.091	3.70	98	1.2	-	0.81	-0.01	82	234	73	66
292	55.762	0.198	0.090	3.71	98	1.2	-	0.80	-0.01	83	233	73	66
293	55.957	0.195	0.091	3.69	98	1.3	-	0.77	-0.03	83	233	73	66
294	56.147	0.190	0.091	3.70	98	1.3	-	0.75	-0.02	84	233	73	66
295	56.345	0.198	0.091	3.71	98	1.2	-	0.74	-0.01	83	233	73	66
296	56.540	0.195	0.091	3.70	98	1.2	-	0.72	-0.02	83	232	73	66
297	56.736	0.196	0.090	3.71	98	1.3	-	0.71	-0.01	82	233	73	66
298	56.930	0.194	0.090	3.70	98	1.2	-	0.69	-0.02	82	233	73	66
299	57.128	0.198	0.089	3.70	98	1.2	-	0.68	-0.01	82	233	73	66
300	57.315	0.187	0.093	3.71	98	1.2	100	0.66	-0.02	82	231	73	66
301	57.513	0.198	0.091	3.71	98	1.2	-	0.65	-0.01	83	232	73	66
302	57.707	0.194	0.093	3.70	98	1.2	-	0.62	-0.03	84	231	73	66
303	57.900	0.193	0.091	3.69	98	1.3	-	0.60	-0.02	83	230	73	66
304	58.097	0.197	0.092	3.69	98	1.3	-	0.59	-0.01	83	231	73	66
305	58.287	0.190	0.090	3.72	98	1.2	-	0.57	-0.02	82	232	73	66
306	58.482	0.195	0.092	3.70	98	1.3	-	0.56	-0.01	82	231	73	66
307	58.672	0.190	0.092	3.70	98	1.2	-	0.55	-0.01	82	232	73	66
308	58.869	0.197	0.092	3.70	98	1.2	-	0.53	-0.02	82	231	73	66
309	59.064	0.195	0.094	3.71	98	1.2	-	0.51	-0.02	83	230	73	66
310	59.259	0.195	0.090	3.71	98	1.2	100	0.49	-0.02	83	231	73	66
311	59.454	0.195	0.090	3.71	98	1.2	-	0.48	-0.01	83	230	73	66
312	59.648	0.194	0.090	3.70	98	1.2	-	0.47	-0.01	82	230	73	66
313	59.845	0.197	0.090	3.71	98	1.3	-	0.45	-0.02	82	230	73	66
314	60.038	0.193	0.091	3.70	98	1.3	-	0.44	-0.01	82	230	73	66
315	60.233	0.195	0.092	3.70	98	1.2	-	0.41	-0.03	82	230	73	66
316	60.427	0.194	0.091	3.70	98	1.3	-	0.41	0.00	82	230	73	66
317	60.621	0.194	0.092	3.71	98	1.3	-	0.40	-0.01	83	229	73	66
318	60.816	0.195	0.088	3.71	98	1.2	-	0.37	-0.03	83	229	73	66
319	61.010	0.194	0.092	3.71	98	1.2	-	0.37	0.00	83	229	73	66

BOX A TEST DATA - ASTM E2780 / ASTM E2515

Client: IHP
Model: I3000
Run #: 9

Job #: 23-229
Tracking #: 169
Technician: AK
Date: 12/22/2023

	Particulate Sampling Data							Fuel Weight (lb)		Temperature Data (°F)			
Elapsed Time (min)	Gas Meter (ft^3)	Sample Rate (cfm)	Dilution Tunnel dP (in H_2O)	Orifice dH (in H_2O)	Meter Temp (°F)	Meter Vacuum (in Hg)	Pro. Rate (%)	Scale Reading	Weight Change	Dilution Tunnel	Flue	Filter	Ambient
320	61.204	0.194	0.090	3.70	98	1.2	101	0.34	-0.03	83	229	73	66
321	61.393	0.189	0.090	3.70	98	1.2	-	0.33	-0.01	82	229	72	66
322	61.590	0.197	0.090	3.69	98	1.2	-	0.31	-0.02	81	229	72	66
323	61.785	0.195	0.092	3.70	98	1.3	-	0.30	-0.01	82	229	72	66
324	61.976	0.191	0.091	3.71	98	1.2	-	0.29	-0.01	82	229	72	66
325	62.173	0.197	0.092	3.70	98	1.2	-	0.27	-0.02	83	229	72	66
326	62.364	0.191	0.092	3.71	98	1.2	-	0.26	-0.01	83	229	73	66
327	62.562	0.198	0.090	3.70	98	1.2	-	0.24	-0.02	82	229	72	66
328	62.759	0.197	0.090	3.70	98	1.2	-	0.23	-0.01	82	229	72	66
329	62.952	0.193	0.090	3.71	98	1.3	-	0.20	-0.03	82	230	72	65
330	63.146	0.194	0.090	3.70	98	1.2	100	0.20	0.00	82	229	72	66
331	63.343	0.197	0.089	3.69	98	1.2	-	0.18	-0.02	81	230	72	65
332	63.535	0.192	0.091	3.71	98	1.2	-	0.15	-0.03	82	229	72	65
333	63.731	0.196	0.090	3.71	98	1.2	-	0.16	0.01	83	229	72	66
334	63.922	0.191	0.090	3.70	98	1.2	-	0.13	-0.03	83	228	72	66
335	64.119	0.197	0.089	3.70	98	1.2	-	0.12	-0.01	83	228	72	66
336	64.310	0.191	0.091	3.71	98	1.3	-	0.10	-0.02	82	228	72	66
337	64.509	0.199	0.091	3.72	98	1.2	-	0.09	-0.01	82	228	72	65
338	64.703	0.194	0.091	3.70	98	1.2	-	0.08	-0.01	81	228	72	65
339	64.896	0.193	0.090	3.70	98	1.2	-	0.06	-0.02	81	228	72	65
340	65.093	0.197	0.092	3.71	98	1.2	100	0.04	-0.02	82	227	72	66
341	65.283	0.190	0.092	3.70	98	1.2	-	0.04	0.00	82	228	72	66
342	65.474	0.191	0.090	3.69	98	1.2	-	0.02	-0.02	83	227	72	66
343	65.672	0.198	0.090	3.71	98	1.2	100	0.00	-0.02	82	226	72	66
Avg/Tot	65.672	0.191	0.090	3.63	93.6	1.2	100			87.9	286.0	74.7	67.3

BOX B TEST DATA - ASTM E2780 / ASTM E2515

Client: IHP
Model: I3000
Run #: 9

Job #: 23-229
Tracking #: 169
Technician: AK
Date: 12/22/2023

	Particulate Sampling Data							Flue Gas Data		
Elapsed Time (min)	Gas Meter (ft^3)	Sample Rate (cfm)	Orifice dH (in H_2O)	Meter Temp (°F)	Meter Vacuum (in Hg)	Pro. Rate (%)	Filter (°F)	Flue Draft (in H_2O)	CO_2 (%)	CO (%)
0	-0.003		0.68	73	1.3		71	-0.061	12.19	0.643
1	0.128	0.131	3.28	72	2.0	-	74	-0.064	3.20	0.053
2	0.303	0.175	3.28	72	2.0	-	74	-0.068	6.13	0.095
3	0.480	0.177	3.28	72	1.9	-	75	-0.074	8.97	0.098
4	0.655	0.175	3.27	72	1.7	-	75	-0.077	9.59	0.098
5	0.828	0.173	3.26	72	1.8	-	76	-0.079	10.70	0.093
6	1.002	0.174	3.27	72	2.1	-	76	-0.069	10.58	0.123
7	1.176	0.174	3.28	72	2.1	-	76	-0.068	6.81	0.025
8	1.356	0.180	3.29	72	1.7	-	76	-0.067	6.53	0.037
9	1.530	0.174	3.29	73	2.0	-	76	-0.067	6.88	0.031
10	1.704	0.174	3.29	73	1.7	99	76	-0.066	7.41	0.035
11	1.878	0.174	3.28	73	1.8	-	76	-0.067	7.38	0.043
12	2.055	0.177	3.28	73	1.9	-	76	-0.069	8.21	0.052
13	2.234	0.179	3.29	73	1.8	-	77	-0.069	8.38	0.047
14	2.407	0.173	3.29	74	1.9	-	77	-0.069	8.92	0.045
15	2.581	0.174	3.29	74	1.7	-	77	-0.070	9.02	0.049
16	2.763	0.182	3.29	74	1.7	-	77	-0.070	9.33	0.049
17	2.937	0.174	3.29	74	1.9	-	77	-0.069	9.45	0.058
18	3.112	0.175	3.30	75	1.8	-	77	-0.069	9.76	0.063
19	3.288	0.176	3.30	75	1.8	-	77	-0.070	10.02	0.112
20	3.466	0.178	3.30	75	2.0	101	77	-0.070	10.30	0.136
21	3.644	0.178	3.30	76	1.8	-	78	-0.070	10.36	0.168
22	3.820	0.176	3.31	76	2.1	-	78	-0.070	10.45	0.205
23	3.995	0.175	3.30	76	2.1	-	78	-0.069	10.58	0.236
24	4.172	0.177	3.30	77	1.6	-	78	-0.070	10.73	0.250
25	4.350	0.178	3.31	77	2.1	-	78	-0.070	10.89	0.285
26	4.529	0.179	3.31	77	1.8	-	78	-0.070	10.80	0.319
27	4.706	0.177	3.32	78	1.9	-	78	-0.070	10.81	0.295
28	4.882	0.176	3.33	78	1.7	-	78	-0.068	10.67	0.309
29	5.059	0.177	3.31	79	2.2	-	78	-0.070	10.81	0.396
30	5.238	0.179	3.31	79	2.2	100	78	-0.071	8.92	0.432
31	5.416	0.178	3.31	79	2.1	-	79	-0.070	10.91	0.722

BOX B TEST DATA - ASTM E2780 / ASTM E2515

Client: IHP
Model: I3000
Run #: 9

Job #: 23-229
Tracking #: 169
Technician: AK
Date: 12/22/2023

	Particulate Sampling Data							Flue Gas Data		
Elapsed Time (min)	Gas Meter (ft^3)	Sample Rate (cfm)	Orifice dH (in H_2O)	Meter Temp (°F)	Meter Vacuum (in Hg)	Pro. Rate (%)	Filter (°F)	Flue Draft (in H_2O)	CO_2 (%)	CO (%)
32	5.597	0.181	3.33	80	2.0	-	79	-0.071	11.05	0.877
33	5.770	0.173	3.32	80	1.8	-	79	-0.070	11.13	1.114
34	5.949	0.179	3.33	80	1.7	-	79	-0.071	11.14	1.204
35	6.131	0.182	3.33	81	2.0	-	79	-0.073	11.33	1.468
36	6.306	0.175	3.32	81	1.9	-	79	-0.071	11.67	0.676
37	6.484	0.178	3.33	81	2.2	-	79	-0.071	11.55	0.513
38	6.661	0.177	3.33	82	1.6	-	79	-0.071	11.75	0.446
39	6.841	0.180	3.33	82	1.8	-	79	-0.074	11.65	0.689
40	7.020	0.179	3.33	82	2.0	101	79	-0.072	11.18	1.342
41	7.203	0.183	3.34	83	2.0	-	79	-0.071	11.12	1.564
42	7.378	0.175	3.33	83	2.0	-	79	-0.071	11.08	1.160
43	7.556	0.178	3.34	84	2.1	-	79	-0.070	11.12	0.712
44	7.736	0.180	3.35	84	1.7	-	79	-0.070	10.92	0.468
45	7.916	0.180	3.34	84	1.7	-	79	-0.072	10.82	0.326
46	8.096	0.180	3.34	85	2.1	-	80	-0.068	10.71	0.201
47	8.275	0.179	3.34	85	2.2	-	80	-0.068	10.72	0.156
48	8.453	0.178	3.35	85	2.1	-	80	-0.071	10.70	0.185
49	8.632	0.179	3.35	85	1.7	-	80	-0.069	10.75	0.129
50	8.812	0.180	3.35	86	2.2	101	80	-0.070	10.68	0.108
51	8.994	0.182	3.35	86	2.2	-	80	-0.067	10.63	0.102
52	9.174	0.180	3.36	86	1.7	-	80	-0.067	10.73	0.074
53	9.354	0.180	3.34	87	1.7	-	80	-0.069	10.68	0.065
54	9.532	0.178	3.35	87	1.8	-	80	-0.070	10.76	0.072
55	9.713	0.181	3.35	87	1.7	-	80	-0.068	11.03	0.117
56	9.894	0.181	3.36	87	2.2	-	80	-0.067	11.26	0.179
57	10.074	0.180	3.35	88	1.9	-	80	-0.067	11.09	0.248
58	10.255	0.181	3.36	88	2.2	-	80	-0.069	11.21	0.341
59	10.434	0.179	3.37	88	1.9	-	80	-0.065	11.22	0.679
60	10.615	0.181	3.36	88	2.1	101	80	-0.069	11.09	0.693
61	10.796	0.181	3.37	88	2.0	-	80	-0.067	10.62	0.886
62	10.978	0.182	3.36	89	1.7	-	80	-0.068	10.87	0.594
63	11.158	0.180	3.36	89	1.7	-	80	-0.068	10.63	0.395

BOX B TEST DATA - ASTM E2780 / ASTM E2515

Client: IHP
Model: I3000
Run #: 9

Job #: 23-229
Tracking #: 169
Technician: AK
Date: 12/22/2023

	Particulate Sampling Data							Flue Gas Data		
Elapsed Time (min)	Gas Meter (ft^3)	Sample Rate (cfm)	Orifice dH (in H_2O)	Meter Temp (°F)	Meter Vacuum (in Hg)	Pro. Rate (%)	Filter (°F)	Flue Draft (in H_2O)	CO_2 (%)	CO (%)
64	11.336	0.178	3.36	89	1.9	-	80	-0.069	10.68	0.163
65	11.520	0.184	3.36	89	1.7	-	80	-0.066	10.32	0.129
66	11.701	0.181	3.37	90	2.2	-	80	-0.069	10.71	0.129
67	11.877	0.176	3.37	90	2.2	-	80	-0.066	10.80	0.095
68	12.061	0.184	3.38	90	2.2	-	80	-0.067	10.59	0.059
69	12.242	0.181	3.37	90	1.7	-	80	-0.067	10.27	0.042
70	12.421	0.179	3.37	90	1.8	102	79	-0.064	10.02	0.086
71	12.602	0.181	3.37	90	1.8	-	79	-0.062	9.76	0.069
72	12.785	0.183	3.38	91	2.2	-	79	-0.066	9.69	0.065
73	12.967	0.182	3.38	91	2.2	-	80	-0.065	9.75	0.105
74	13.147	0.180	3.37	91	1.8	-	79	-0.065	9.87	0.128
75	13.329	0.182	3.38	91	1.7	-	79	-0.066	10.01	0.145
76	13.509	0.180	3.39	91	2.0	-	80	-0.067	9.98	0.329
77	13.690	0.181	3.38	91	1.9	-	80	-0.068	10.14	0.431
78	13.873	0.183	3.38	92	1.8	-	80	-0.065	10.20	0.337
79	14.056	0.183	3.39	92	2.0	-	80	-0.066	10.31	0.373
80	14.233	0.177	3.38	92	2.0	101	80	-0.067	10.35	0.422
81	14.413	0.180	3.38	92	2.0	-	80	-0.066	10.32	0.445
82	14.601	0.188	3.38	92	2.2	-	80	-0.068	10.50	0.451
83	14.779	0.178	3.38	92	1.6	-	80	-0.066	10.55	0.482
84	14.962	0.183	3.38	93	2.2	-	80	-0.065	10.76	0.528
85	15.146	0.184	3.40	93	1.7	-	80	-0.063	10.62	0.630
86	15.327	0.181	3.39	93	2.2	-	80	-0.068	10.59	0.769
87	15.508	0.181	3.39	93	1.8	-	80	-0.066	10.47	0.721
88	15.689	0.181	3.39	93	1.8	-	80	-0.066	10.47	0.758
89	15.871	0.182	3.39	93	1.6	-	80	-0.065	10.53	0.600
90	16.054	0.183	3.39	93	2.0	100	80	-0.068	10.43	0.527
91	16.237	0.183	3.40	93	2.2	-	80	-0.068	10.13	0.476
92	16.419	0.182	3.39	94	1.7	-	79	-0.067	10.01	0.489
93	16.597	0.178	3.39	94	1.7	-	79	-0.066	9.89	0.279
94	16.781	0.184	3.39	94	2.2	-	79	-0.065	9.75	0.304
95	16.963	0.182	3.38	94	2.0	-	79	-0.067	9.77	0.237

BOX B TEST DATA - ASTM E2780 / ASTM E2515

Client: IHP
Model: I3000
Run #: 9

Job #: 23-229
Tracking #: 169
Technician: AK
Date: 12/22/2023

	Particulate Sampling Data							Flue Gas Data		
Elapsed Time (min)	Gas Meter (ft^3)	Sample Rate (cfm)	Orifice dH (in H_2O)	Meter Temp (°F)	Meter Vacuum (in Hg)	Pro. Rate (%)	Filter (°F)	Flue Draft (in H_2O)	CO_2 (%)	CO (%)
96	17.150	0.187	3.39	94	2.0	-	79	-0.064	9.82	0.192
97	17.329	0.179	3.39	94	1.7	-	79	-0.062	9.85	0.190
98	17.512	0.183	3.39	94	2.2	-	79	-0.066	9.86	0.240
99	17.694	0.182	3.39	94	1.9	-	79	-0.065	9.99	0.188
100	17.874	0.180	3.39	94	2.1	100	79	-0.067	9.95	0.242
101	18.056	0.182	3.39	94	2.2	-	79	-0.064	9.95	0.477
102	18.240	0.184	3.39	94	1.9	-	79	-0.067	9.93	0.450
103	18.425	0.185	3.39	94	2.1	-	79	-0.065	9.88	0.389
104	18.606	0.181	3.39	94	2.1	-	79	-0.067	9.91	0.413
105	18.789	0.183	3.40	94	1.9	-	79	-0.068	9.97	0.322
106	18.968	0.179	3.40	95	1.7	-	79	-0.064	9.89	0.364
107	19.151	0.183	3.40	95	2.2	-	79	-0.065	10.00	0.396
108	19.334	0.183	3.41	95	2.1	-	79	-0.067	9.94	0.315
109	19.515	0.181	3.40	95	2.2	-	79	-0.063	9.80	0.181
110	19.701	0.186	3.40	95	1.6	101	79	-0.064	9.69	0.118
111	19.881	0.180	3.41	95	2.0	-	79	-0.063	9.53	0.074
112	20.065	0.184	3.41	95	2.2	-	79	-0.063	9.38	0.048
113	20.250	0.185	3.41	95	2.1	-	79	-0.064	9.34	0.041
114	20.430	0.180	3.40	95	1.7	-	79	-0.062	9.25	0.037
115	20.614	0.184	3.40	95	1.8	-	79	-0.063	9.16	0.031
116	20.800	0.186	3.41	95	1.8	-	79	-0.061	8.96	0.030
117	20.980	0.180	3.40	95	2.2	-	79	-0.061	8.80	0.026
118	21.163	0.183	3.40	96	1.9	-	79	-0.060	8.56	0.030
119	21.344	0.181	3.40	95	1.8	-	79	-0.060	8.40	0.027
120	21.527	0.183	3.40	96	1.9	101	79	-0.063	8.27	0.028
121	21.714	0.187	3.40	96	2.1	-	79	-0.061	8.25	0.025
122	21.894	0.180	3.41	96	1.7	-	79	-0.059	8.16	0.026
123	22.079	0.185	3.41	96	2.2	-	79	-0.059	7.93	0.028
124	22.261	0.182	3.41	96	1.7	-	79	-0.060	7.76	0.029
125	22.442	0.181	3.40	96	1.8	-	79	-0.060	7.69	0.031
126	22.625	0.183	3.40	96	1.6	-	79	-0.059	7.80	0.041
127	22.808	0.183	3.41	96	2.2	-	79	-0.059	7.53	0.033

BOX B TEST DATA - ASTM E2780 / ASTM E2515

Client: IHP
Model: I3000
Run #: 9

Job #: 23-229
Tracking #: 169
Technician: AK
Date: 12/22/2023

	Particulate Sampling Data							Flue Gas Data		
Elapsed Time (min)	Gas Meter (ft^3)	Sample Rate (cfm)	Orifice dH (in H_2O)	Meter Temp (°F)	Meter Vacuum (in Hg)	Pro. Rate (%)	Filter (°F)	Flue Draft (in H_2O)	CO_2 (%)	CO (%)
128	22.992	0.184	3.40	96	1.7	-	79	-0.060	7.67	0.033
129	23.176	0.184	3.41	96	2.2	-	79	-0.059	7.62	0.031
130	23.358	0.182	3.40	96	1.7	101	78	-0.059	7.58	0.036
131	23.541	0.183	3.41	96	2.2	-	78	-0.057	7.60	0.034
132	23.722	0.181	3.41	96	1.6	-	78	-0.058	7.61	0.033
133	23.906	0.184	3.41	96	2.1	-	78	-0.057	7.58	0.032
134	24.087	0.181	3.40	96	1.7	-	78	-0.059	7.67	0.031
135	24.274	0.187	3.41	96	2.2	-	78	-0.058	7.63	0.031
136	24.458	0.184	3.41	96	1.7	-	78	-0.058	7.63	0.033
137	24.640	0.182	3.41	96	2.2	-	78	-0.057	7.61	0.031
138	24.822	0.182	3.40	96	1.9	-	78	-0.057	7.63	0.029
139	25.005	0.183	3.40	96	1.7	-	78	-0.057	7.68	0.028
140	25.188	0.183	3.41	96	1.9	100	78	-0.056	7.72	0.036
141	25.370	0.182	3.41	96	1.7	-	78	-0.058	7.71	0.032
142	25.559	0.189	3.41	96	1.9	-	78	-0.057	7.78	0.038
143	25.740	0.181	3.40	96	2.0	-	78	-0.056	7.92	0.032
144	25.923	0.183	3.41	96	1.8	-	78	-0.058	7.92	0.033
145	26.104	0.181	3.41	96	1.9	-	78	-0.059	8.05	0.031
146	26.291	0.187	3.41	97	2.2	-	78	-0.058	8.14	0.034
147	26.472	0.181	3.41	96	2.1	-	78	-0.060	8.32	0.035
148	26.655	0.183	3.41	97	2.1	-	78	-0.056	8.46	0.031
149	26.843	0.188	3.41	97	1.8	-	78	-0.058	8.69	0.039
150	27.022	0.179	3.41	97	1.9	100	78	-0.059	9.31	0.061
151	27.205	0.183	3.41	97	2.2	-	78	-0.060	9.67	0.128
152	27.390	0.185	3.41	97	2.2	-	78	-0.058	9.81	0.148
153	27.570	0.180	3.40	97	1.7	-	78	-0.061	9.76	0.114
154	27.755	0.185	3.41	97	2.2	-	78	-0.059	9.22	0.077
155	27.942	0.187	3.41	97	2.2	-	78	-0.061	8.58	0.048
156	28.123	0.181	3.41	97	2.1	-	78	-0.056	8.23	0.050
157	28.306	0.183	3.41	97	1.6	-	78	-0.058	8.40	0.040
158	28.486	0.180	3.41	97	1.7	-	78	-0.059	8.29	0.033
159	28.670	0.184	3.41	97	2.0	-	78	-0.057	8.07	0.034

BOX B TEST DATA - ASTM E2780 / ASTM E2515

Client: IHP
Model: I3000
Run #: 9

Job #: 23-229
Tracking #: 169
Technician: AK
Date: 12/22/2023

	Particulate Sampling Data							Flue Gas Data		
Elapsed Time (min)	Gas Meter (ft^3)	Sample Rate (cfm)	Orifice dH (in H_2O)	Meter Temp (°F)	Meter Vacuum (in Hg)	Pro. Rate (%)	Filter (°F)	Flue Draft (in H_2O)	CO_2 (%)	CO (%)
160	28.854	0.184	3.41	97	2.0	101	78	-0.057	7.99	0.029
161	29.041	0.187	3.41	97	2.2	-	78	-0.058	7.92	0.032
162	29.225	0.184	3.42	97	2.2	-	77	-0.057	7.91	0.034
163	29.405	0.180	3.41	97	1.8	-	77	-0.057	7.80	0.027
164	29.589	0.184	3.41	97	1.7	-	77	-0.056	7.83	0.025
165	29.770	0.181	3.41	97	2.2	-	77	-0.057	7.81	0.029
166	29.954	0.184	3.41	97	1.7	-	77	-0.057	7.73	0.028
167	30.139	0.185	3.41	97	1.9	-	77	-0.054	7.78	0.029
168	30.322	0.183	3.41	97	1.9	-	77	-0.054	7.66	0.029
169	30.507	0.185	3.41	97	1.7	-	77	-0.056	7.59	0.032
170	30.689	0.182	3.41	97	2.0	100	77	-0.056	7.63	0.030
171	30.871	0.182	3.41	97	1.8	-	77	-0.054	7.60	0.030
172	31.055	0.184	3.42	97	1.8	-	77	-0.055	7.61	0.031
173	31.237	0.182	3.41	97	1.7	-	77	-0.054	7.61	0.029
174	31.422	0.185	3.41	97	2.2	-	77	-0.055	7.49	0.028
175	31.609	0.187	3.41	97	2.2	-	77	-0.054	7.52	0.026
176	31.794	0.185	3.41	97	2.0	-	77	-0.054	7.52	0.025
177	31.974	0.180	3.42	97	2.0	-	77	-0.055	7.46	0.028
178	32.155	0.181	3.41	97	1.9	-	77	-0.053	7.40	0.027
179	32.338	0.183	3.42	97	1.7	-	77	-0.054	7.41	0.026
180	32.522	0.184	3.41	97	1.7	99	77	-0.054	7.33	0.024
181	32.707	0.185	3.41	97	2.1	-	77	-0.053	7.41	0.025
182	32.892	0.185	3.42	97	2.0	-	77	-0.054	7.39	0.024
183	33.074	0.182	3.41	97	1.6	-	77	-0.053	7.37	0.019
184	33.258	0.184	3.41	97	1.6	-	77	-0.053	7.24	0.025
185	33.439	0.181	3.41	97	2.1	-	77	-0.052	7.32	0.024
186	33.623	0.184	3.41	97	1.9	-	77	-0.048	7.34	0.020
187	33.808	0.185	3.42	97	2.2	-	77	-0.052	7.37	0.028
188	33.994	0.186	3.41	97	1.8	-	77	-0.053	7.36	0.025
189	34.180	0.186	3.42	97	1.8	-	77	-0.052	7.37	0.022
190	34.359	0.179	3.42	97	2.1	99	76	-0.052	7.32	0.024
191	34.537	0.178	3.42	97	1.9	-	76	-0.052	7.34	0.024

BOX B TEST DATA - ASTM E2780 / ASTM E2515

Client: IHP
Model: I3000
Run #: 9

Job #: 23-229
Tracking #: 169
Technician: AK
Date: 12/22/2023

	Particulate Sampling Data							Flue Gas Data		
Elapsed Time (min)	Gas Meter (ft^3)	Sample Rate (cfm)	Orifice dH (in H_2O)	Meter Temp (°F)	Meter Vacuum (in Hg)	Pro. Rate (%)	Filter (°F)	Flue Draft (in H_2O)	CO_2 (%)	CO (%)
192	34.727	0.190	3.41	97	1.8	-	76	-0.053	7.33	0.022
193	34.905	0.178	3.42	97	2.0	-	76	-0.055	7.34	0.021
194	35.092	0.187	3.41	97	1.7	-	76	-0.053	7.29	0.020
195	35.279	0.187	3.42	97	1.7	-	76	-0.050	7.26	0.022
196	35.457	0.178	3.42	97	1.9	-	76	-0.052	7.25	0.024
197	35.644	0.187	3.42	97	2.0	-	76	-0.051	7.27	0.023
198	35.825	0.181	3.41	97	1.7	-	76	-0.052	7.28	0.024
199	36.009	0.184	3.41	97	2.1	-	76	-0.053	7.16	0.023
200	36.195	0.186	3.42	97	2.1	99	76	-0.053	7.22	0.023
201	36.374	0.179	3.42	97	1.7	-	76	-0.052	7.16	0.026
202	36.561	0.187	3.42	97	1.9	-	76	-0.053	7.16	0.019
203	36.744	0.183	3.41	97	2.1	-	76	-0.052	7.22	0.022
204	36.928	0.184	3.41	97	2.0	-	76	-0.053	7.14	0.022
205	37.112	0.184	3.41	97	1.6	-	76	-0.052	7.16	0.019
206	37.290	0.178	3.42	97	2.1	-	76	-0.051	7.19	0.022
207	37.477	0.187	3.42	97	1.8	-	76	-0.050	7.09	0.018
208	37.661	0.184	3.41	97	2.1	-	76	-0.054	7.07	0.018
209	37.843	0.182	3.41	97	2.1	-	76	-0.050	7.06	0.020
210	38.029	0.186	3.41	97	1.9	100	76	-0.050	7.07	0.018
211	38.212	0.183	3.41	97	2.0	-	76	-0.051	7.06	0.015
212	38.397	0.185	3.42	97	1.8	-	76	-0.051	7.11	0.018
213	38.577	0.180	3.41	97	2.2	-	76	-0.050	7.17	0.018
214	38.762	0.185	3.42	97	2.1	-	76	-0.050	7.10	0.018
215	38.948	0.186	3.41	97	1.9	-	76	-0.051	7.21	0.021
216	39.131	0.183	3.42	97	2.2	-	76	-0.050	7.26	0.019
217	39.313	0.182	3.41	97	1.9	-	76	-0.051	7.21	0.022
218	39.495	0.182	3.42	97	2.1	-	76	-0.051	7.26	0.019
219	39.679	0.184	3.41	97	1.6	-	76	-0.048	7.22	0.026
220	39.864	0.185	3.41	97	1.7	99	76	-0.049	7.22	0.019
221	40.047	0.183	3.41	97	1.7	-	76	-0.050	7.28	0.018
222	40.231	0.184	3.42	97	1.8	-	76	-0.050	7.21	0.021
223	40.414	0.183	3.42	97	1.9	-	76	-0.052	7.29	0.020

BOX B TEST DATA - ASTM E2780 / ASTM E2515

Client: IHP
Model: I3000
Run #: 9

Job #: 23-229
Tracking #: 169
Technician: AK
Date: 12/22/2023

	Particulate Sampling Data							Flue Gas Data		
Elapsed Time (min)	Gas Meter (ft^3)	Sample Rate (cfm)	Orifice dH (in H_2O)	Meter Temp (°F)	Meter Vacuum (in Hg)	Pro. Rate (%)	Filter (°F)	Flue Draft (in H_2O)	CO_2 (%)	CO (%)
224	40.598	0.184	3.42	97	2.1	-	76	-0.051	7.25	0.022
225	40.779	0.181	3.42	97	2.1	-	75	-0.050	7.29	0.023
226	40.960	0.181	3.41	96	1.8	-	75	-0.053	7.20	0.020
227	41.146	0.186	3.42	97	1.7	-	75	-0.048	7.21	0.022
228	41.327	0.181	3.41	96	2.2	-	75	-0.050	7.25	0.021
229	41.516	0.189	3.42	96	2.2	-	75	-0.050	7.17	0.022
230	41.698	0.182	3.42	96	2.2	99	75	-0.050	7.17	0.020
231	41.885	0.187	3.42	96	1.8	-	75	-0.050	7.12	0.025
232	42.061	0.176	3.42	96	2.2	-	75	-0.051	7.11	0.021
233	42.247	0.186	3.42	96	2.0	-	75	-0.050	7.18	0.023
234	42.432	0.185	3.42	96	1.9	-	75	-0.052	7.17	0.019
235	42.615	0.183	3.42	96	2.1	-	75	-0.050	7.17	0.028
236	42.797	0.182	3.42	96	2.0	-	75	-0.048	7.08	0.022
237	42.982	0.185	3.42	96	2.2	-	75	-0.047	7.15	0.024
238	43.165	0.183	3.42	96	2.2	-	75	-0.048	7.13	0.021
239	43.345	0.180	3.41	96	2.2	-	75	-0.049	7.08	0.021
240	43.531	0.186	3.41	96	1.6	99	75	-0.049	7.09	0.021
241	43.716	0.185	3.42	96	1.7	-	75	-0.051	7.10	0.016
242	43.898	0.182	3.43	96	2.1	-	75	-0.051	7.13	0.019
243	44.085	0.187	3.42	96	2.0	-	75	-0.049	7.12	0.022
244	44.270	0.185	3.42	96	1.8	-	75	-0.050	7.03	0.021
245	44.449	0.179	3.42	96	2.0	-	75	-0.049	7.04	0.022
246	44.633	0.184	3.41	96	1.8	-	75	-0.049	7.08	0.020
247	44.816	0.183	3.42	96	2.1	-	75	-0.049	7.09	0.019
248	45.001	0.185	3.41	96	2.0	-	75	-0.050	7.08	0.019
249	45.186	0.185	3.42	96	2.2	-	75	-0.049	6.91	0.021
250	45.368	0.182	3.41	96	2.0	99	75	-0.050	6.77	0.016
251	45.552	0.184	3.42	96	2.1	-	75	-0.050	6.70	0.023
252	45.733	0.181	3.42	96	2.2	-	75	-0.048	6.90	0.019
253	45.920	0.187	3.42	96	2.1	-	75	-0.046	6.99	0.017
254	46.102	0.182	3.42	96	2.0	-	75	-0.048	6.91	0.018
255	46.285	0.183	3.42	96	2.0	-	75	-0.051	6.85	0.020

BOX B TEST DATA - ASTM E2780 / ASTM E2515

Client: IHP
Model: I3000
Run #: 9

Job #: 23-229
Tracking #: 169
Technician: AK
Date: 12/22/2023

	Particulate Sampling Data							Flue Gas Data		
Elapsed Time (min)	Gas Meter (ft^3)	Sample Rate (cfm)	Orifice dH (in H_2O)	Meter Temp (°F)	Meter Vacuum (in Hg)	Pro. Rate (%)	Filter (°F)	Flue Draft (in H_2O)	CO_2 (%)	CO (%)
256	46.467	0.182	3.42	96	2.1	-	75	-0.049	6.93	0.020
257	46.653	0.186	3.42	96	1.7	-	75	-0.048	6.87	0.020
258	46.836	0.183	3.42	96	1.7	-	75	-0.047	6.82	0.026
259	47.021	0.185	3.42	96	2.2	-	75	-0.048	6.83	0.017
260	47.201	0.180	3.42	96	1.9	99	75	-0.048	6.90	0.025
261	47.386	0.185	3.42	96	2.2	-	75	-0.050	6.85	0.018
262	47.570	0.184	3.42	96	2.1	-	75	-0.050	6.79	0.021
263	47.752	0.182	3.42	96	2.1	-	75	-0.048	6.77	0.019
264	47.937	0.185	3.42	96	1.7	-	75	-0.049	6.81	0.017
265	48.119	0.182	3.42	96	1.6	-	75	-0.049	6.73	0.016
266	48.303	0.184	3.42	96	1.9	-	75	-0.047	6.79	0.019
267	48.489	0.186	3.42	96	1.8	-	75	-0.047	6.74	0.021
268	48.674	0.185	3.41	96	1.7	-	75	-0.050	6.68	0.025
269	48.855	0.181	3.42	96	1.9	-	75	-0.048	6.58	0.021
270	49.038	0.183	3.43	96	1.7	100	75	-0.048	6.62	0.025
271	49.222	0.184	3.42	96	2.2	-	75	-0.048	6.61	0.023
272	49.404	0.182	3.42	96	1.9	-	75	-0.049	6.62	0.022
273	49.584	0.180	3.42	96	2.1	-	75	-0.046	6.63	0.019
274	49.771	0.187	3.42	96	1.7	-	75	-0.048	6.62	0.025
275	49.955	0.184	3.43	96	2.1	-	75	-0.049	6.62	0.022
276	50.138	0.183	3.42	96	2.2	-	75	-0.048	6.62	0.024
277	50.323	0.185	3.42	96	2.1	-	75	-0.048	6.59	0.021
278	50.506	0.183	3.42	96	1.8	-	75	-0.047	6.65	0.020
279	50.688	0.182	3.42	96	2.0	-	75	-0.047	6.57	0.024
280	50.872	0.184	3.42	96	1.7	99	75	-0.047	6.57	0.021
281	51.057	0.185	3.43	96	1.8	-	75	-0.048	6.59	0.021
282	51.240	0.183	3.42	96	2.2	-	75	-0.046	6.63	0.023
283	51.425	0.185	3.42	96	1.8	-	75	-0.048	6.61	0.022
284	51.608	0.183	3.42	96	1.7	-	75	-0.048	6.60	0.028
285	51.790	0.182	3.42	96	2.1	-	75	-0.047	6.56	0.023
286	51.974	0.184	3.42	96	2.0	-	75	-0.050	6.57	0.027
287	52.156	0.182	3.42	96	2.0	-	75	-0.046	6.57	0.024

BOX B TEST DATA - ASTM E2780 / ASTM E2515

Client: IHP
Model: I3000
Run #: 9

Job #: 23-229
Tracking #: 169
Technician: AK
Date: 12/22/2023

	Particulate Sampling Data							Flue Gas Data		
Elapsed Time (min)	Gas Meter (ft^3)	Sample Rate (cfm)	Orifice dH (in H_2O)	Meter Temp (°F)	Meter Vacuum (in Hg)	Pro. Rate (%)	Filter (°F)	Flue Draft (in H_2O)	CO_2 (%)	CO (%)
288	52.341	0.185	3.41	96	1.7	-	75	-0.047	6.51	0.021
289	52.525	0.184	3.42	96	1.8	-	75	-0.049	6.42	0.018
290	52.706	0.181	3.42	96	1.8	100	75	-0.049	6.47	0.028
291	52.890	0.184	3.42	96	1.7	-	74	-0.048	6.47	0.020
292	53.074	0.184	3.42	96	2.1	-	74	-0.045	6.48	0.024
293	53.258	0.184	3.41	96	2.2	-	75	-0.048	6.46	0.020
294	53.439	0.181	3.43	96	1.7	-	75	-0.047	6.48	0.021
295	53.626	0.187	3.42	96	1.9	-	75	-0.050	6.50	0.024
296	53.811	0.185	3.43	96	1.9	-	74	-0.047	6.48	0.023
297	53.993	0.182	3.42	96	2.1	-	74	-0.046	6.43	0.023
298	54.177	0.184	3.42	96	2.2	-	74	-0.048	6.45	0.024
299	54.362	0.185	3.42	96	1.8	-	74	-0.050	6.43	0.027
300	54.539	0.177	3.42	96	1.7	99	74	-0.046	6.45	0.026
301	54.727	0.188	3.43	96	2.2	-	74	-0.047	6.39	0.022
302	54.910	0.183	3.41	96	2.1	-	74	-0.046	6.41	0.024
303	55.095	0.185	3.41	96	2.2	-	74	-0.049	6.46	0.024
304	55.281	0.186	3.43	96	1.8	-	74	-0.046	6.30	0.022
305	55.461	0.180	3.42	96	1.7	-	74	-0.048	6.33	0.022
306	55.643	0.182	3.43	96	2.2	-	74	-0.047	6.28	0.025
307	55.824	0.181	3.42	96	2.1	-	74	-0.049	6.34	0.025
308	56.012	0.188	3.42	96	1.8	-	74	-0.046	6.29	0.024
309	56.196	0.184	3.43	96	2.2	-	74	-0.047	6.29	0.029
310	56.380	0.184	3.43	96	2.0	99	74	-0.047	6.32	0.029
311	56.563	0.183	3.43	96	1.9	-	74	-0.048	6.24	0.026
312	56.744	0.181	3.42	96	2.2	-	74	-0.047	6.15	0.024
313	56.931	0.187	3.42	96	1.8	-	74	-0.048	6.14	0.026
314	57.111	0.180	3.42	96	1.9	-	74	-0.047	6.17	0.025
315	57.296	0.185	3.43	96	2.1	-	74	-0.049	6.06	0.028
316	57.480	0.184	3.42	96	2.0	-	74	-0.045	6.09	0.026
317	57.664	0.184	3.43	96	2.1	-	74	-0.046	6.07	0.022
318	57.847	0.183	3.43	96	2.0	-	74	-0.049	6.05	0.027
319	58.029	0.182	3.43	96	2.2	-	74	-0.046	6.00	0.025

BOX B TEST DATA - ASTM E2780 / ASTM E2515

Client: IHP
Model: I3000
Run #: 9

Job #: 23-229
Tracking #: 169
Technician: AK
Date: 12/22/2023

	Particulate Sampling Data							Flue Gas Data		
Elapsed Time (min)	Gas Meter (ft^3)	Sample Rate (cfm)	Orifice dH (in H_2O)	Meter Temp (°F)	Meter Vacuum (in Hg)	Pro. Rate (%)	Filter (°F)	Flue Draft (in H_2O)	CO_2 (%)	CO (%)
320	58.212	0.183	3.43	96	1.6	100	74	-0.048	6.02	0.025
321	58.394	0.182	3.43	96	2.2	-	74	-0.047	6.02	0.027
322	58.580	0.186	3.43	96	2.2	-	74	-0.048	6.02	0.029
323	58.766	0.186	3.43	96	2.2	-	74	-0.049	6.07	0.026
324	58.945	0.179	3.43	96	1.6	-	74	-0.046	5.98	0.029
325	59.131	0.186	3.42	96	1.8	-	74	-0.047	6.02	0.027
326	59.311	0.180	3.43	96	1.9	-	74	-0.046	6.02	0.023
327	59.497	0.186	3.43	96	2.2	-	74	-0.047	6.04	0.026
328	59.684	0.187	3.43	96	1.7	-	74	-0.048	6.01	0.027
329	59.865	0.181	3.43	96	2.1	-	74	-0.047	5.99	0.026
330	60.050	0.185	3.42	96	2.1	100	74	-0.048	5.98	0.028
331	60.236	0.186	3.43	96	2.2	-	74	-0.047	6.02	0.024
332	60.415	0.179	3.43	96	1.7	-	74	-0.046	6.02	0.031
333	60.599	0.184	3.43	96	1.6	-	74	-0.048	6.00	0.031
334	60.779	0.180	3.43	96	2.0	-	74	-0.046	5.98	0.032
335	60.967	0.188	3.43	96	1.8	-	74	-0.045	6.00	0.031
336	61.148	0.181	3.44	96	1.6	-	74	-0.047	5.92	0.027
337	61.335	0.187	3.43	96	2.1	-	74	-0.048	5.90	0.031
338	61.518	0.183	3.43	96	2.1	-	74	-0.049	5.84	0.032
339	61.699	0.181	3.42	96	2.0	-	74	-0.047	5.84	0.042
340	61.887	0.188	3.43	96	1.8	99	74	-0.047	5.81	0.029
341	62.067	0.180	3.42	96	1.8	-	74	-0.048	5.76	0.024
342	62.248	0.181	3.43	96	1.6	-	74	-0.046	5.72	0.027
343	62.436	0.188	3.44	96	1.7	100	74	-0.048	5.81	0.029
Avg/Tot	62.439	0.182	3.39	92.6	1.9	100	76.7	-0.057	8.11	0.131

BOX C TEST DATA - ASTM E2780 / ASTM E2515

Client: IHP
Model: I3000
Run #: 9

Job #: 23-229
Tracking #: 169
Technician: AK
Date: 12/22/2023

	Particulate Sampling Data						
Elapsed Time (min)	Gas Meter (ft^3)	Sample Rate (cfm)	Orifice dH (in H_2O)	Meter Temp (°F)	Meter Vacuum (in Hg)	Pro. Rate (%)	Filter (°F)
0	-0.002		0.22	70	1.3		69
1	0.116	0.118	0.93	69	1.7	-	69
2	0.256	0.140	0.92	69	1.7	-	69
3	0.396	0.140	0.93	69	1.5	-	70
4	0.536	0.140	0.93	69	1.7	-	70
5	0.676	0.140	0.93	69	1.7	-	70
6	0.817	0.141	0.94	69	1.5	-	70
7	0.956	0.139	0.95	69	1.6	-	71
8	1.099	0.143	0.94	70	1.8	-	71
9	1.243	0.144	0.96	70	1.7	-	71
10	1.384	0.141	0.95	70	1.7	97	71
11	1.526	0.142	0.97	70	1.7	-	71
12	1.669	0.143	0.96	71	1.6	-	72
13	1.814	0.145	0.95	71	1.8	-	72
14	1.959	0.145	0.97	71	1.8	-	72
15	2.099	0.140	0.97	71	1.7	-	72
16	2.247	0.148	0.96	71	1.8	-	72
17	2.390	0.143	0.97	72	1.8	-	72
18	2.534	0.144	0.97	72	1.7	-	72
19	2.677	0.143	0.96	72	1.6	-	72
20	2.823	0.146	0.98	72	1.7	100	73
21	2.967	0.144	0.97	72	1.6	-	73
22	3.111	0.144	0.96	73	1.6	-	73
23	3.257	0.146	0.98	74	1.7	-	73
24	3.402	0.145	0.99	74	1.7	-	73
25	3.546	0.144	0.97	74	1.6	-	73
26	3.692	0.146	0.98	75	1.6	-	73
27	3.839	0.147	0.99	75	1.7	-	73
28	3.984	0.145	0.99	75	1.7	-	74
29	4.130	0.146	0.98	76	1.6	-	74
30	4.277	0.147	0.99	76	1.8	100	74
31	4.424	0.147	1.00	76	1.8	-	74

BOX C TEST DATA - ASTM E2780 / ASTM E2515

Client: IHP
Model: I3000
Run #: 9

Job #: 23-229
Tracking #: 169
Technician: AK
Date: 12/22/2023

	Particulate Sampling Data						
Elapsed Time (min)	Gas Meter (ft^3)	Sample Rate (cfm)	Orifice dH (in H_2O)	Meter Temp (°F)	Meter Vacuum (in Hg)	Pro. Rate (%)	Filter (°F)
32	4.574	0.150	1.00	77	1.8	-	74
33	4.718	0.144	0.99	77	1.6	-	74
34	4.865	0.147	1.00	77	1.8	-	74
35	5.015	0.150	1.00	78	1.7	-	74
36	5.162	0.147	1.01	78	1.6	-	74
37	5.310	0.148	1.02	77	1.8	-	74
38	5.458	0.148	1.01	78	1.8	-	74
39	5.606	0.148	1.00	78	1.8	-	75
40	5.754	0.148	1.01	79	1.7	102	75
41	5.906	0.152	1.01	79	1.6	-	75
42	6.053	0.147	1.02	79	1.8	-	75
43	6.202	0.149	1.02	80	1.7	-	75
44	6.352	0.150	1.02	80	1.8	-	75
45	6.501	0.149	1.02	80	1.7	-	75
46	6.650	0.149	1.01	80	1.8	-	75
47	6.800	0.150	1.01	80	1.8	-	75
48	6.950	0.150	1.02	81	1.7	-	75
49	7.100	0.150	1.03	81	1.7	-	75
50	7.251	0.151	1.03	81	1.8	103	75
51	7.402	0.151	1.03	81	1.6	-	75
52	7.552	0.150	1.03	81	1.7	-	75
53	7.705	0.153	1.03	82	1.8	-	75
54	7.853	0.148	1.03	82	1.6	-	75
55	8.004	0.151	1.03	82	1.6	-	75
56	8.155	0.151	1.03	82	1.8	-	75
57	8.306	0.151	1.03	81	1.7	-	75
58	8.457	0.151	1.02	82	1.7	-	76
59	8.608	0.151	1.02	82	1.7	-	76
60	8.759	0.151	1.02	83	1.7	103	76
Avg/Tot	8.761	0.146	0.98	75.6	1.7	101	73.2

WOODSTOVE SURFACE TEMPERATURE DATA

Client: IHP
Model: I3000
Run #: 9

Job #: 23-229
Tracking #: 169
Technician: AK
Date: 12/22/2023

Stove ΔT: 79

	Temperature Data (°F)						
Elapsed Time (min)	FB Left	FB Right	FB Back	FB Top	FB Bottom	Stove Surface Average	Catalyst Exit
0	376	399	286	459	457	395.3	633.4
1	375	399	286	458	458	395.1	610.2
2	375	398	285	455	459	394.2	608.7
3	374	398	286	454	459	394.3	729.5
4	374	397	286	458	460	395.0	814.1
5	372	395	285	464	461	395.5	871.6
6	371	393	286	471	461	396.5	862.0
7	369	391	284	479	462	397.1	850.9
8	367	389	285	484	462	397.4	818.9
9	365	386	284	487	463	396.8	796.3
10	364	384	284	487	463	396.0	790.4
11	361	381	283	488	463	395.4	796.1
12	359	379	283	490	463	394.7	808.4
13	356	377	280	492	462	393.4	824.1
14	354	374	280	495	462	392.9	839.2
15	353	372	279	497	462	392.3	851.9
16	351	369	279	500	461	391.8	863.1
17	349	367	277	504	460	391.2	874.4
18	346	365	276	508	460	390.9	884.5
19	345	363	276	513	459	391.1	893.0
20	343	360	274	518	458	390.7	899.8
21	341	358	273	523	457	390.7	902.8
22	340	356	272	530	456	390.9	905.9
23	339	355	271	537	456	391.3	906.6
24	337	353	271	543	455	391.7	907.3
25	335	352	269	548	454	391.6	906.4
26	334	350	268	554	453	391.8	908.0
27	334	349	267	560	452	392.3	909.9
28	333	348	267	567	451	393.0	909.0
29	332	346	266	571	450	392.9	907.1
30	331	345	264	577	449	393.3	906.1
31	331	344	264	580	448	393.3	905.5
32	330	344	263	585	447	393.6	905.5
33	329	343	262	590	446	394.1	906.3
34	329	342	262	596	445	394.8	911.5
35	329	342	261	603	444	395.5	916.2
36	328	341	261	607	443	396.1	922.0
37	329	341	261	611	442	396.9	924.8
38	328	340	260	617	441	397.4	926.2
39	328	340	260	621	440	397.8	925.6
40	327	340	259	626	439	398.3	925.5
41	327	340	260	627	438	398.4	923.3
42	327	340	258	629	437	398.3	919.4
43	327	341	258	631	436	398.3	915.3
44	326	341	258	631	435	398.4	910.7
45	327	342	257	635	434	398.9	906.0
46	327	343	257	635	434	399.0	902.8
47	327	343	256	637	433	398.9	901.1

WOODSTOVE SURFACE TEMPERATURE DATA

Client: IHP
Model: I3000
Run #: 9

Job #: 23-229
Tracking #: 169
Technician: AK
Date: 12/22/2023

Stove ΔT: 79

	Temperature Data (°F)						
Elapsed Time (min)	FB Left	FB Right	FB Back	FB Top	FB Bottom	Stove Surface Average	Catalyst Exit
48	326	344	258	636	432	399.0	901.9
49	327	345	256	638	430	399.1	900.2
50	327	345	256	639	429	399.2	894.7
51	327	345	255	640	428	399.0	891.0
52	327	346	256	639	427	398.9	889.8
53	327	347	255	639	426	398.6	889.9
54	327	347	254	638	425	398.3	890.1
55	327	348	255	638	423	398.1	893.8
56	327	349	255	639	422	398.4	898.5
57	328	349	255	640	421	398.5	902.0
58	328	350	253	642	420	398.4	904.7
59	327	351	254	642	418	398.3	906.8
60	328	351	254	642	417	398.3	904.2
61	329	352	253	641	416	397.8	900.7
62	329	352	253	640	414	397.7	897.7
63	329	353	253	640	413	397.5	893.2
64	330	353	253	638	412	397.1	887.5
65	330	355	253	639	411	397.3	883.4
66	331	356	253	637	409	397.1	880.0
67	331	357	253	637	408	397.0	878.5
68	331	358	253	633	407	396.3	876.0
69	332	358	253	633	406	396.2	868.3
70	332	359	252	632	404	395.9	861.8
71	332	360	252	630	403	395.4	873.2
72	332	361	252	629	402	395.0	873.9
73	332	361	251	625	401	393.9	873.8
74	333	362	252	622	399	393.4	874.8
75	332	362	251	622	398	393.2	892.6
76	333	362	250	622	397	392.7	890.0
77	333	363	251	620	396	392.5	884.7
78	333	363	250	619	395	391.9	882.2
79	334	363	251	620	394	392.3	880.5
80	334	363	250	619	393	391.7	880.1
81	334	363	251	619	392	391.7	879.6
82	335	363	250	619	391	391.3	880.0
83	335	363	251	618	390	391.4	883.3
84	335	362	250	619	389	391.1	885.7
85	336	362	251	620	388	391.3	885.9
86	336	362	250	621	387	391.1	886.2
87	336	362	250	622	386	391.2	886.5
88	337	363	250	622	385	391.3	887.3
89	337	363	250	624	384	391.5	889.9
90	337	363	251	624	383	391.4	889.7
91	337	363	250	625	382	391.3	888.9
92	338	363	250	625	381	391.3	885.3
93	338	363	251	625	380	391.3	881.3
94	339	362	251	624	379	391.0	876.1
95	339	362	251	624	378	390.9	869.7

WOODSTOVE SURFACE TEMPERATURE DATA

Client: IHP
Model: I3000
Run #: 9

Job #: 23-229
Tracking #: 169
Technician: AK
Date: 12/22/2023

Stove ΔT: 79

	Temperature Data (°F)						
Elapsed Time (min)	FB Left	FB Right	FB Back	FB Top	FB Bottom	Stove Surface Average	Catalyst Exit
96	339	363	251	621	377	390.1	871.4
97	339	363	251	622	377	390.2	869.3
98	339	363	251	619	376	389.5	870.1
99	340	363	251	616	375	388.9	869.5
100	340	364	251	615	374	388.7	868.0
101	340	364	251	615	373	388.6	871.1
102	340	364	251	613	373	388.2	864.8
103	340	365	252	613	372	388.2	870.4
104	341	365	252	613	371	388.1	869.3
105	341	365	252	612	371	388.1	866.8
106	341	365	252	610	371	387.7	868.8
107	341	365	251	609	370	387.3	863.0
108	341	366	251	608	370	387.2	854.3
109	342	366	253	608	370	387.5	848.7
110	342	366	252	606	369	386.9	853.3
111	342	367	252	606	369	386.8	846.7
112	342	367	252	603	368	386.5	849.2
113	342	368	253	601	368	386.2	847.1
114	342	368	252	599	368	385.9	844.6
115	343	369	253	596	367	385.5	842.9
116	343	369	253	594	367	385.1	840.6
117	343	369	253	592	367	384.7	836.6
118	343	370	253	589	367	384.2	832.5
119	343	370	252	586	366	383.3	828.2
120	343	371	252	582	366	382.7	823.6
121	343	371	252	579	366	382.2	820.3
122	343	371	253	575	365	381.6	816.2
123	343	371	252	572	365	380.9	812.1
124	343	371	252	567	365	379.8	807.3
125	343	372	252	565	364	379.2	803.1
126	343	372	252	561	364	378.3	797.4
127	343	372	252	556	364	377.3	792.7
128	343	371	252	552	364	376.3	786.5
129	343	371	252	548	363	375.6	778.4
130	343	371	252	544	363	374.6	771.9
131	343	371	252	540	362	373.8	766.2
132	343	371	252	536	362	372.7	761.4
133	343	371	251	533	362	372.0	759.0
134	343	370	251	529	362	371.0	755.1
135	344	370	251	524	361	370.1	752.4
136	344	370	251	522	361	369.5	750.5
137	343	369	251	519	361	368.7	748.8
138	344	370	250	521	361	368.8	746.2
139	344	370	250	518	361	368.4	744.8
140	343	369	250	514	360	367.5	743.7
141	343	369	250	513	360	367.0	744.1
142	343	369	250	510	360	366.3	744.6
143	343	368	250	511	360	366.3	744.9

WOODSTOVE SURFACE TEMPERATURE DATA

Client: IHP
Model: I3000
Run #: 9

Job #: 23-229
Tracking #: 169
Technician: AK
Date: 12/22/2023

Stove ΔT: 79

	Temperature Data (°F)						
Elapsed Time (min)	FB Left	FB Right	FB Back	FB Top	FB Bottom	Stove Surface Average	Catalyst Exit
144	343	368	250	509	360	365.8	745.5
145	343	367	250	507	359	365.3	745.9
146	343	367	249	507	359	365.0	747.9
147	342	367	249	505	359	364.4	749.7
148	343	366	250	505	359	364.4	749.6
149	342	366	249	505	359	364.2	758.3
150	342	366	248	506	359	364.1	772.7
151	342	366	248	507	358	364.1	794.4
152	342	365	249	509	358	364.6	813.3
153	342	365	249	512	358	365.1	824.6
154	342	365	249	515	358	365.6	826.3
155	341	365	249	518	358	366.1	821.2
156	341	364	249	522	357	366.6	804.6
157	341	364	248	523	357	366.7	807.0
158	341	364	248	524	357	366.7	797.4
159	341	364	248	524	357	366.7	782.8
160	341	364	248	523	357	366.3	769.0
161	341	364	248	521	356	365.9	757.8
162	340	364	248	519	356	365.3	749.1
163	341	364	248	516	356	365.0	740.5
164	340	364	248	513	356	364.3	732.3
165	340	364	248	511	356	364.0	725.4
166	340	365	248	507	356	363.1	720.0
167	340	365	248	504	356	362.6	715.6
168	340	365	248	502	356	362.1	711.4
169	340	366	248	499	356	361.8	706.8
170	340	366	248	496	356	361.3	703.7
171	339	366	248	494	357	360.7	701.0
172	339	366	249	491	357	360.4	698.1
173	339	367	248	488	357	359.9	695.7
174	339	367	248	486	357	359.4	693.8
175	339	367	249	483	357	359.0	691.8
176	339	368	249	480	358	358.6	690.4
177	339	368	249	478	358	358.1	687.9
178	339	368	249	477	358	358.1	685.8
179	338	369	248	474	358	357.5	683.8
180	338	369	249	472	359	357.2	682.9
181	338	369	250	470	359	357.0	681.3
182	338	369	250	468	359	356.8	680.5
183	338	369	250	467	359	356.6	679.1
184	338	369	250	465	359	356.3	678.9
185	337	369	251	464	360	356.0	678.4
186	337	369	250	462	360	355.5	677.3
187	337	369	250	461	360	355.6	675.4
188	337	369	251	460	360	355.5	674.6
189	336	369	250	459	361	354.9	674.9
190	336	369	250	457	361	354.6	674.4
191	336	369	251	457	361	354.6	674.8

WOODSTOVE SURFACE TEMPERATURE DATA

Client: IHP
Model: I3000
Run #: 9

Job #: 23-229
Tracking #: 169
Technician: AK
Date: 12/22/2023

Stove ΔT: 79

	Temperature Data (°F)						
Elapsed Time (min)	FB Left	FB Right	FB Back	FB Top	FB Bottom	Stove Surface Average	Catalyst Exit
192	336	369	251	455	361	354.2	674.4
193	335	369	251	455	361	354.0	672.7
194	335	368	251	454	361	353.7	671.8
195	335	369	251	453	361	353.6	669.6
196	334	369	251	453	361	353.4	671.6
197	334	368	251	452	361	353.1	670.3
198	333	368	251	452	361	352.9	668.5
199	333	368	251	451	361	352.6	669.8
200	333	368	251	450	360	352.3	668.2
201	333	368	252	449	360	352.4	668.3
202	332	367	252	448	360	351.9	668.9
203	332	367	251	448	360	351.6	667.0
204	332	367	251	448	360	351.5	663.3
205	331	367	252	447	360	351.3	659.6
206	331	366	251	446	359	350.8	658.4
207	330	366	252	445	359	350.5	656.9
208	330	366	252	445	359	350.1	653.1
209	330	365	252	444	359	349.7	650.7
210	330	365	252	442	358	349.5	648.4
211	330	365	253	441	358	349.3	643.6
212	329	364	253	440	358	348.8	643.1
213	329	364	253	439	358	348.3	642.3
214	328	364	252	438	358	347.9	641.7
215	328	363	252	437	358	347.7	640.8
216	328	363	252	436	358	347.3	641.0
217	328	362	252	435	358	347.1	641.2
218	328	362	252	434	358	346.6	641.3
219	327	362	253	434	358	346.7	639.5
220	327	362	253	433	358	346.3	639.2
221	327	361	253	433	358	346.1	639.7
222	327	361	252	432	358	345.7	639.6
223	326	361	252	431	357	345.4	638.2
224	326	360	252	431	357	345.1	637.3
225	326	360	252	430	357	345.0	639.4
226	326	359	252	430	357	344.8	638.1
227	326	359	253	429	357	344.6	636.0
228	325	359	252	428	357	344.4	634.4
229	325	358	253	428	357	344.1	635.7
230	325	359	253	427	357	344.0	635.9
231	325	358	253	426	357	343.8	633.4
232	325	358	252	427	357	343.6	634.6
233	324	358	253	426	356	343.3	635.1
234	324	358	253	425	356	343.3	635.3
235	324	357	253	425	356	343.0	633.6
236	324	357	253	424	356	342.8	631.9
237	324	357	253	424	356	342.7	632.7
238	323	356	254	424	356	342.6	632.4
239	323	356	253	423	356	342.2	629.7

WOODSTOVE SURFACE TEMPERATURE DATA

Client: IHP
Model: I3000
Run #: 9

Job #: 23-229
Tracking #: 169
Technician: AK
Date: 12/22/2023

Stove ΔT: 79

	Temperature Data (°F)						
Elapsed Time (min)	FB Left	FB Right	FB Back	FB Top	FB Bottom	Stove Surface Average	Catalyst Exit
240	323	356	253	423	355	341.9	631.4
241	323	356	254	422	355	341.9	629.3
242	323	355	254	422	355	341.9	629.8
243	323	355	254	421	355	341.5	628.9
244	322	354	254	421	355	341.3	625.6
245	322	354	254	421	355	341.1	627.3
246	322	353	254	420	355	340.9	626.3
247	322	353	255	420	355	341.0	625.4
248	322	353	255	419	355	340.8	624.5
249	322	352	254	419	355	340.5	627.2
250	322	352	255	419	355	340.5	625.2
251	322	352	254	418	355	340.2	624.1
252	322	352	255	418	355	340.2	621.5
253	322	351	255	417	355	339.9	617.1
254	321	350	255	417	355	339.6	619.8
255	322	351	256	416	355	339.7	617.4
256	321	351	255	415	355	339.4	616.4
257	321	350	255	414	356	339.2	616.2
258	321	350	255	413	356	338.9	616.2
259	321	349	256	413	356	338.9	614.8
260	320	349	255	412	356	338.5	612.7
261	321	349	255	412	357	338.6	610.7
262	320	348	254	411	357	338.2	610.9
263	320	348	255	410	357	338.1	611.0
264	320	348	256	410	357	338.2	607.6
265	320	348	255	409	358	337.7	608.9
266	320	347	255	409	358	337.7	610.1
267	320	347	255	409	358	337.5	608.0
268	319	347	255	408	358	337.2	605.4
269	319	346	254	407	358	336.9	605.3
270	319	346	255	407	359	336.9	607.6
271	318	345	254	407	359	336.7	607.8
272	319	345	254	406	359	336.6	608.2
273	318	345	254	406	359	336.2	607.7
274	318	344	254	406	359	336.1	608.8
275	318	344	254	405	359	335.9	608.9
276	318	344	254	404	359	335.7	604.6
277	317	343	253	405	360	335.6	605.8
278	317	343	254	404	360	335.4	604.2
279	317	343	253	404	360	335.2	606.8
280	316	342	253	404	360	334.8	605.4
281	316	342	253	403	360	334.7	606.7
282	316	341	253	403	359	334.4	605.2
283	315	341	253	403	359	334.3	605.3
284	315	341	253	403	359	334.2	602.7
285	315	340	253	403	359	334.0	603.3
286	315	340	252	402	359	333.7	603.1
287	314	340	251	402	359	333.3	602.3

WOODSTOVE SURFACE TEMPERATURE DATA

Client: IHP
Model: I3000
Run #: 9

Job #: 23-229
Tracking #: 169
Technician: AK
Date: 12/22/2023

Stove ΔT: 79

	Temperature Data (°F)						
Elapsed Time (min)	FB Left	FB Right	FB Back	FB Top	FB Bottom	Stove Surface Average	Catalyst Exit
288	314	339	252	402	359	333.2	601.3
289	314	339	251	402	359	333.0	603.4
290	313	339	251	402	359	332.8	603.7
291	313	338	251	402	359	332.7	602.9
292	314	338	252	401	359	332.6	600.6
293	313	338	251	400	359	332.1	596.1
294	312	337	251	400	358	331.9	597.8
295	312	337	251	400	358	331.5	598.1
296	312	337	250	400	358	331.3	599.9
297	312	336	251	399	358	331.1	597.9
298	312	336	250	400	357	330.9	600.9
299	311	336	250	398	357	330.5	599.9
300	311	336	250	399	357	330.5	599.9
301	311	335	249	398	357	330.0	597.8
302	310	335	249	398	356	329.8	597.0
303	310	334	249	398	356	329.4	598.9
304	310	334	249	398	356	329.3	597.6
305	310	334	249	397	356	329.1	596.7
306	310	333	249	397	355	328.8	594.8
307	310	333	249	396	355	328.5	596.3
308	309	333	249	396	355	328.3	594.2
309	309	332	248	396	355	327.9	591.4
310	309	332	248	396	354	327.7	593.4
311	308	332	248	396	354	327.6	594.0
312	308	332	247	395	354	327.2	593.6
313	308	331	248	394	354	327.1	593.6
314	308	331	248	394	353	326.8	592.6
315	308	331	248	394	353	326.5	594.0
316	308	330	248	394	353	326.5	591.6
317	307	330	247	394	352	326.1	589.0
318	307	329	247	393	352	325.7	588.3
319	307	329	247	393	352	325.3	588.6
320	306	329	247	392	351	325.0	589.2
321	306	328	246	392	351	324.7	588.3
322	306	327	247	391	351	324.3	589.1
323	306	327	246	391	350	324.0	590.5
324	305	327	246	391	350	323.6	587.9
325	305	326	246	391	349	323.4	588.4
326	305	326	247	390	349	323.1	587.0
327	304	325	247	389	348	322.7	588.7
328	304	325	246	389	348	322.2	587.9
329	303	324	245	389	347	321.7	588.5
330	303	324	245	388	347	321.5	587.2
331	303	323	246	388	347	321.1	587.9
332	302	323	247	387	346	320.9	585.6
333	302	322	246	387	346	320.5	584.9
334	301	322	246	387	345	320.2	584.1
335	301	321	245	387	344	319.6	585.5

WOODSTOVE SURFACE TEMPERATURE DATA

Client: IHP
Model: I3000
Run #: 9

Job #: 23-229
Tracking #: 169
Technician: AK
Date: 12/22/2023

Stove ΔT: 79

	Temperature Data (°F)						
Elapsed Time (min)	FB Left	FB Right	FB Back	FB Top	FB Bottom	Stove Surface Average	Catalyst Exit
336	301	321	245	386	344	319.3	585.0
337	300	320	246	385	343	318.9	583.9
338	300	320	246	385	343	318.7	584.5
339	299	319	246	385	342	318.2	584.7
340	299	319	246	384	342	318.0	583.6
341	299	318	246	384	341	317.5	581.8
342	298	318	246	384	340	317.2	579.2
343	298	317	246	383	340	316.7	579.2
Average	329.9	355.5	253.9	495.4	377.5	362.4	732.2

LAB SAMPLE DATA - ASTM E2515

Client: IHP
Model: I3000
Run #: 9

Job #: 23-229
Tracking #: 169
Technician: AK
Date: 12/22/2023

		Sample ID	Tare, mg	Final, mg	Catch, mg
Filters	**A**	G00803	231.9	234.2	2.3
	B	G00804	233.2	235.9	2.7
	C - 1st Hour	G00805	231.8	232.8	1.0
	Amb	G00806	231.4	231.4	0.0
Probes	**A**	15A	117239.9	117240.7	0.8
	B	15B	116752.6	116753.1	0.5
	C - 1st Hour	15C	116847.5	116847.8	0.3
O-rings	**A**	15A	3570.0	3570.4	0.4
	B	15B	3571.2	3571.5	0.3
	C - 1st Hour	15C	3396.8	3396.6	0.0

**Negative value corrected to zero*

Placed in Dessicator on:	12/19/2023

Balance Audit (mg):		200.0		200.0				
		Weight (mg)	Date/Time	Weight (mg)	Date/Time	Weight (mg)	Date/Time	Weight (mg)	Date/Time
Filters	**A**	234.1	1/2 12:00	234.2	1/3 8:30				
	B	235.9	1/2 12:00	235.9	1/3 8:30				
	C - 1st Hour	232.6	1/2 12:00	232.8	1/3 8:30				
	Amb	231.5	1/2 12:00	231.4	1/3 8:30				
Probes	**A**	117240.7	1/2 12:00	117240.7	1/3 8:30				
	B	116753.0	1/2 12:00	116753.1	1/3 8:30				
	C - 1st Hour	116847.7	1/2 12:00	116847.8	1/3 8:30				
O-Rings	**A**	3570.3	1/2 12:00	3570.4	1/3 8:30				
	B	3571.5	1/2 12:00	3571.5	1/3 8:30				
	C - 1st Hour	3396.9	1/2 12:00	3396.6	1/3 8:30				

Train A Aggregate, mg:	**3.5**
Train B Aggregate, mg:	**3.5**
Train C Aggregate, mg:	**1.3**
Ambient, mg:	**0.0**

ASTM E2780 Wood Heater Run Sheets

Client: FPI Job Number: 23-229 Tracking #: 169
Model: I3000 Run Number: 9 Test Date: 12/22/23

Wood Heater Run Notes

Test Control Settings

Primary Air Setting(s): Open 0.232”
Targeted Burn Category: II

Preburn Notes

Time	Notes
	-None-

Test Notes

Test Burn Start Time: 13:27 Test Fuel Loaded by: 35 seconds
Door Closed: 40 seconds Air Control Set at: 300 seconds
Other Loading Notes: Bypass open while door open, fan off (fan confirmation)

Time	Notes
	-None-

Test Burn End Time: 19:10

Flue Gas Concentration Measurement

Calibration Gas Values: Span Gas CO_2 (%): 16.98 CO (%): 4.30
Mid Gas CO_2 (%): 10.00 CO (%): 2.51

Calibration Results:

	Pre Test			Post Test		
	Zero	Span	Mid	Zero	Span	Mid
Time	11:58	12:01	12:03	19:15	19:16	19:17
CO_2	0.00	17.06	10.15	0.02	17.11	10.09
CO	-0.002	4.318	2.542	0.000	4.321	2.539

Flue Gas Probe Leak Check: Initial: No Leakage Final: No Leakage

Technician Signature: Date: 12/22/23

ASTM E2780 Wood Heater Run Sheets

Client: FPI Job Number: 23-229 Tracking #: 169
Model: I3000 Run Number: 9 Test Date: 12/22/23

Test Fuel Front/Side View

Test Fuel Iso View

Test Fuel Loaded in Stove

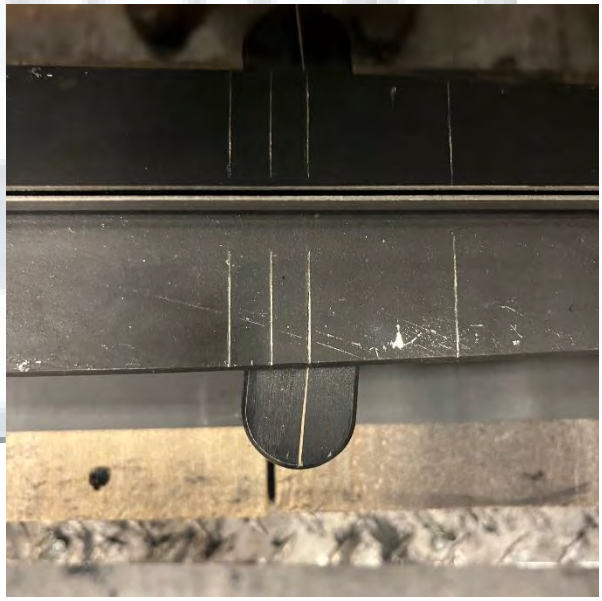

Air Setting

Technician Signature: Date: 12/22/23

ASTM E2515 - Glass Fiber Filters

Date:	11/8	11/9	11/15				
Time:	12:00	8:30	6:00				
	Weight 1	Weight 2	Weigth 3	Weight 4	Initial	Project	Run
G00741	248.1	248.2	–	–	SB	23-226	#5
G00742	247.9	247.8	–	–	SB	↓	↓
G00743	248.1	248.3	–	–	SB		
G00744	248.9	248.7	–	–	SB		
G00745	248.6	248.7	–	–	SB	22-291	C1#6
G00746	240.2	240.2	–	–	SB	↓	↓
G00747	248.5	248.4	–	–	SB	22-291	C1#7
G00748	248.9	248.8	–	–	SB	↓	↓
G00749	256.9	257.2	257.0	–	SB	22-291	C2#1
G00750	248.2	248.4	–	–	SB	↓	↓
G00751	240.0	240.0	–	–	SB	22-291	C2#2
G00752	250.5	250.6	–	–	SB	22-291	C2#2
G00753	251.0	250.9	–	–	SB	23-229	#1
G00754	250.9	250.8	–	–	SB	↓	↓
G00755	250.7	250.5	–	–	SB		
G00756	251.2	251.1	–	–	SB		

Date:	11/21	11/22	11/27				
Time:	13:30	17:00	10:45				
	Weight 1	Weight 2	Weigth 3	Weight 4	Initial	Project	Run
G00757	250.7	250.9	–	–	A	23-229	#2
G00758	250.4	250.5	–	–	A	↓	↓
G00759	250.6	251.0	250.9	–	A		
G00760	250.0	250.0	–	–	A		
G00761	250.4	250.6	–	–	A		#3
G00762	250.6	250.6	–	–	A		↓
G00763	250.1	250.2	–	–	A		
G00764	251.3	251.5	–	–	A		
G00765	251.9	252.0	–	–	A		#4
G00766	251.3	251.3	–	–	A		↓
G00767	250.7	250.8	–	–	A		
G00768	251.2	251.1	–	–	A		
G00769	251.1	251.2	–	–	A		#5
G00770	259.6	259.6	–	–	A		↓
G00771	250.6	250.5	–	–	A		
G00772	249.6	249.6	–	–	A		

ASTM E2515 - Glass Fiber Filters

Date:	11/28	11/29	11/30				
Time:	13:00	11:00	12:00				
	Weight 1	Weight 2	Weigth 3	Weight 4	Initial	Project	Run
G00773	251.7	251.5	–	–	SB	~~22-791~~	~~C2#3~~
G00774	251.3	251.0	251.2	–	SB	↓	↓
G00775	250.6	250.6	–	–	SB		
G00776	251.5	251.4	–	–	SB		
G00777	250.9	250.9	–	–	SB	23-238	#1
G00778	251.4	251.4	–	–	SB		
G00779	240.9	241.0	–	–	SB		
G00780	250.4	250.4	–	–	SB	↓	↓
G00781	249.7	249.7	–	–	SB	22-791	C2#3
G00782	250.1	250.1	–	–	SB	↓	↓
G00783	251.3	251.4	–	–	SB	22-791	C2#4
G00784	250.3	250.3	–	–	SB	↓	↓
G00785	250.4	250.5	–	–	SB	22-791	C2#5
G00786	251.0	251.1	–	–	SB	↓	↓
G00787	235.5	235.6	–	–	SB	22-791	C2#6
G00788	230.6	230.7	–	–	SB	↓	↓

Date:	12/12	12/13					
Time:	10:30	12:00					
	Weight 1	Weight 2	Weigth 3	Weight 4	Initial	Project	Run
G00789	230.7	230.5	–	–	SB	22-791	C2#7
G00790	230.5	230.4	–	–	SB	↓	↓
G00791	230.6	230.6	–	–	SB	23-224	#6
G00792	231.9	231.8	–	–	SB		
G00793	232.1	232.0	–	–	SB		
G00794	232.0	232.0	–	–	SB	↓	↓
G00795	232.3	232.2	–	–	SB		#7
G00796	235.2	235.1	–	–	SB		
G00797	232.3	232.2	–	–	SB		
G00798	230.7	230.6	–	–	SB	↓	↓
G00799	231.2	231.2	–	–	SB		#8
G00800	232.0	232.1	–	–	SB		
G00801	231.2	231.3	–	–	SB		
G00802	231.3	231.3	–	–	SB	↓	↓
G00803	231.9	231.9	–	–	SB		#9
G00804	233.2	233.2	–	–	SB	↓	↓

ASTM E2515 - Glass Fiber Filters

Date:	12/20/23	12/22/23					
Time:	15:00	0830					
	Weight 1	Weight 2	Weigth 3	Weight 4	Initial	Project	Run
G00805	231.8	231.8	-	-	A	23-229	#9
G00806	231.3	231.4	-	-	A	↓	↓
G00807	228.5	228.7	-	-	A	23-235	#1
G00808	233.9	233.8	-	-	A	↓	↓
G00809	232.1	232.1	-	-	A	↓	↓
G00810	231.6	231.5	-	-	A	↓	↓
G00811	231.4	231.3	-	-	A		
G00812	230.5	230.4	-	-	A		
G00813	231.1	231.1	-	-	A		
G00814	230.9	230.9	-	-	A		
G00815	232.1	232.0	-	-	A	23-237	#1
G00816	231.5	231.5	-	-	A	↓	↓
G00817	231.6	231.6	-	-	A	↓	↓
G00818	231.0	231.0	-	-	A	↓	↓
G00819	231.3	231.2	-	-	A	23-236	#1
G00820	230.6	230.5	-	-	A	↓	↓

Date:	1/8/24	1/9/24					
Time:	10:30	0730					
	Weight 1	Weight 2	Weigth 3	Weight 4	Initial	Project	Run
G00821	231.3	231.3	-	-	A	23-231	#1
G00822	231.7	231.6	-	-	A	↓	↓
G00823	231.5	231.5	-	-	A	23-234	#1
G00824	231.1	231.0	-	-	A	↓	↓
G00825	231.9	231.8	-	-	A	↓	↓
G00826	231.0	230.9	-	-	A	↓	↓
G00827	230.7	230.6	-	-	A	23-242	#1
G00828	231.4	231.2	-	-	A	↓	↓
G00829	232.3	232.3	-	-	A	↓	↓
G00830	231.1	231.2	-	-	A	↓	↓
G00831	231.5	231.6	-	-	A	23-242	#2
G00832	230.6	230.6	-	-	A	↓	↓
G00833	230.3	230.3	-	-	A	↓	↓
G00834	231.2	231.2	-	-	A	↓	↓
G00835	231.1	231.0	-	-	A	23-242	#3
G00836	230.7	230.7	-	-	A	↓	↓

ASTM E2515 - O-Ring Samples 1-10

Date:	11/21	11/22					
Time:	13:30	14:00					
	Weight 1	Weight 2	Weigth 3	Weight 4	Initial	Project	Run
1A	3569.0	3569.2	-	-	A	23-229	#1
1B	3557.3	3557.5	-	-	A		
1C	4167.8	4167.9	-	-	A		
2A	3554.8	3554.8	-	-	A	23-229	#2
2B	3574.0	3574.0	-	-	A		
2C	3391.7	3391.9	-	-	A		
3A	3580.9	3581.1	-	-	A	23-229	#3
3B	3569.9	3569.9	-	-	A		
3C	3623.9	3624.0	-	-	A		
4A	3377.3	3377.5	-	-	A	23-229	#4
4B	3581.0	3581.1	-	-	A		
4C	3373.3	3373.3	-	-	A		
5A	3536.6	3536.7	-	-	A	23-229	#5
5B	3532.9	3532.9	-	-	A		
5C	3376.9	3377.0	-	-	A		

Date:	11/28	11/29					
Time:	13:00	11:00					
	Weight 1	Weight 2	Weigth 3	Weight 4	Initial	Project	Run
6A	3614.5	3614.3	-	-	JB	~~22-791~~	~~C2#3~~
6B	3397.2	3397.2	-	-	JB		
6C	3402.2	3402.0	-	-	JB		
7A	3572.4	3572.2	-	-	JB	23-23[illegible]	#1
7B	3523.5	3523.6	-	-	JB		
7C	3407.0	3407.1	-	-	JB		
8A	3552.6	3552.7	-	-	JB	22-791	C2#3
8B	3357.6	3357.7	-	-	JB		
8C	3586.9	3587.0	-	-	JB	22-791	C2#4
9A	3581.0	3581.2	-	-	JB	↓	↓
9B	3523.7	3523.9	-	-	JB	22-791	C2#5
9C	3431.4	3431.6	-	-	JB		
10A	3361.6	3361.5	-	-	JB	22-791	C2#6
10B	3571.5	3571.4	-	-	JB		
10C	3367.0	3366.9	-	-	JB		

ASTM E2515 - O-Ring Samples 11-20

Date:	12/12	12/13	12/14				
Time:	10:30	12:00	10:00				
	Weight 1	Weight 2	Weigth 3	Weight 4	Initial	Project	Run
11A	3424.0	3423.9	–	–	SB	22-741	C2 #7
11B	4233.7	4233.6	–	–	SB		
11C	3588.4	3588.3	–	–	SB		
12A	3586.1	3585.9	–	–	SB	23-229	#6
12B	3550.7	3550.4	3550.4	–	SB		
12C	3616.3	3616.1	–	–	SB		
13A	3596.3	3596.2	–	–	SB		#7
13B	3642.5	3642.5	–	–	SB		
13C	4410.1	4409.7	4409.5	–	SB		
14A	3366.9	3366.6	3366.4	–	SB		#8
14B	3342.0	3341.7	3341.5	–	SB		
14C	3445.1	3445.0	–	–	SB		
15A	3570.1	3570.0	–	–	SB		#9
15B	3571.3	3571.2	–	–	SB		
15C	3397.2	3396.8	3396.8	–	SB		

Date:	1/2/24	1/3/24					
Time:	14:30	08:30					
	Weight 1	Weight 2	Weigth 3	Weight 4	Initial	Project	Run
16A	3573.0	3573.2	–	–	SB	23-235	#1
16B	3638.5	3638.6	–	–	SB		
16C	3601.7	3601.6	–	–	SB		
17A	3613.2	3613.1	–	–	SB		
17B	3568.9	3568.9	–	–	SB		
17C	3596.8	3596.7	–	–	SB		
18A	3602.7	3602.8	–	–	SB	23-237	#1
18B	3546.3	3546.2	–	–	SB		
18C	3528.5	3528.5	–	–	SB		
19A	3585.6	3585.7	–	–	SB	23-236	#1
19B	3632.9	3633.0	–	–	SB		
19C	3615.1	3615.2	–	–	SB		
20A	3558.4	3558.6	–	–	SB	23-234	#1
20B	* ~~3617.~~ 3614.0	3614.1	–	–	SB		
20C	3610.3	3610.5	–	–	SB		

ASTM E2515 - Probe Samples 1-10

Date:	11/21	11/22					
Time:	13:30	14:15					
	Weight 1	Weight 2	Weigth 3	Weight 4	Initial	Project	Run
1A	115627.3	115627.4	-	-	A	23-229	#1
1B	115902.7	115902.6	-	-	A		
1C	116433.4	116433.3	-	-	A		
2A	116057.2	116057.3	-	-	A	23-229	#2
2B	116174.3	116174.3	-	-	A		
2C	116429.5	116429.6	-	-	A		
3A	115881.2	115881.1	-	-	A	23-229	#3
3B	116121.1	116121.0	-	-	A		
3C	116619.0	116618.9	-	-	A		
4A	116023.4	116023.4	-	-	A	23-229	#4
4B	116182.7	116182.6	-	-	A		
4C	116998.2	116998.3	-	-	A		
5A	116757.7	116757.6	-	-	A	23-229	#5
5B	116875.9	116876.0	-	-	A		
5C	115855.5	115855.4	-	-	A		

Date:	11/28	11/29	11/30				
Time:	13:00	11:00	12:00				
	Weight 1	Weight 2	Weigth 3	Weight 4	Initial	Project	Run
6A	116382.5	116382.9	116382.9	-	SB	~~22-791~~	C2 #3
6B	115954.1	115954.5	115954.6	-	SB		
6C	115128.5	115128.9	115128.9	-	SB		
7A	116558.2	116558.2	-	-	SB	23-238	#1
7B	117128.4	117128.8	117128.6	-	SB		
7C	116551.0	116551.2	-	-	SB		
8A	116633.3	116633.7	116633.5	-	SB	22-791	C2#3
8B	116665.5	116665.8	116665.8	-	SB		
8C	116662.8	116663.2	116663.1	-	SB	22-791	C2#4
9A	116530.3	116530.8	116530.8	-		↓	↓
9B	117738.0	117738.1	-	-	SB	22-791	C2#5
9C	116603.1	116603.2	-	-	SB		
10A	116645.7	116645.7	-	-	SB	22-791	C2#6
10B	117753.3	117753.5	-	-	SB		
10C	116728.6	116728.6	-	-	SB		

ASTM E2515 - Probe Samples 11-20

Date:	12/12	12/13	12/15	12/18			
Time:	10:30	12:00	10:00	9:00			
	Weight 1	Weight 2	Weigth 3	Weight 4	Initial	Project	Run
11A	116865.6	116865.7	–	–	SB	22-791	C2#7
11B	117339.3	117339.4	–	–	SB		
11C	116185.5	116185.6	–	–	SB		
12A	116705.4	116705.8	116705.9	–	SB	23-229	#6
12B	117771.8	117771.8	–	–	SB		
12C	117171.5	117171.7	–	–	SB		
13A	117315.1	117314.9	–	–	SB		#7
13B	116941.6	116941.4	–	–	SB		
13C	115650.4	115650.2	–	–	SB		
14A	116633.4	116633.2	–	–	SB		#8
14B	116619.5	116619.3	–	–	SB		
14C	116530.6	116530.4	–	–	SB		
15A	117239.8	117239.5	117239.8	117239.9	SB		#9
15B	116752.8	116752.6	–	–	SB		
15C	116847.7	116847.5	–	–	SB		

Date:	1/2/24	1/3/24					
Time:	1400	0830					
	Weight 1	Weight 2	Weigth 3	Weight 4	Initial	Project	Run
16A	116378.3	116378.4	–	–	SB	23-235	#1
16B	115860.5	115860.7	–	–	SB		
16C	114147.1	114147.3	–	–	SB		
17A	116810.0	116810.2	–	–	SB		
17B	117139.7	117139.8	–	–	SB		
17C	113140.6	113140.7	–	–	SB		
18A	117499.6	117499.7	–	–	SB	23-237	#1
18B	117331.9	117331.8	–	–	SB		
18C	114334.9	114335.1	–	–	SB		
19A	117026.1	117025.9	–	–	SB	23-236	#1
19B	117013.0	117012.9	–	–	SB		
19C	114230.8	114230.9	–	–	SB		
20A	115626.1	115626.2	–	–	SB	23-234	#1
20B	115965.4	115965.9	115966.1	–	A		
20C	113774.9	113775.0	–	–	SB		

Pre-Conditioning Data

Client:	FPI	Job #:	23-229
Model:	I3000	Tracking #:	169
Date(s):	6/2/23 - 8/4/23	Technician:	SB

Elapsed Time (hrs)	Flue (°F)	Catalyst Exit (°F)	Notes: Indicate initial air setting and any changes in in setting during conditioning, as well as weight and average moisture content of all fuel additions.
0	350	631	+17.83 lb, Doug Fir, 21.29%. Air Medium Low
1	338	870	
2	331	894	
3	280	758	
4	239	653	
5	219	587	
6	200	529	
7	349	686	+18.53 lb, Doug Fir, 21.97%. Air Medium Low
8	338	861	
9	332	877	
10	304	813	
11	249	671	
12	231	616	
13	344	610	+17.90 lb, Doug Fir, 20.88%. Air Medium Low
14	326	848	
15	305	835	
16	301	821	
17	240	652	
18	222	596	
19	210	559	
20	335	625	+17.61 lb, Doug Fir, 21.14%. Air Medium Low
21	288	740	
22	314	845	
23	265	751	
24	218	637	
25	201	585	
26	186	541	
27	330	637	+18.22 lb, Doug Fir, 20.79%. Air Medium Low
28	322	827	
29	320	861	
30	262	720	
31	228	655	
32	207	589	
33	189	532	
34	342	595	+18.35 lb, Doug Fir, 21.89%. Air Medium Low
35	334	784	
36	314	790	
37	271	738	
38	206	562	
39	188	530	
40	181	507	
41	390	646	+18.57 lb, Doug Fir, 21.47%. Air Medium Low
42	354	772	
43	341	784	
44	304	735	
45	240	588	
46	223	550	
47	210	518	
48	330	595	+17.92 lb, Doug Fir, 22.61%. Air Medium Low
49	316	775	
50	297	787	

Signature/Date: 2/5/2024

Sample Calculations – ASTM E2780 & E2515

Client: IHP
Model: I3000
Run: 5

Equations used to calculate the parameters listed below are described in this appendix. Sample calculations are provided for each equation. The raw data and printout results from a sample run are also provided for comparison to the sample calculations.

M_{Sdb} – Weight of test fuel spacers, dry basis, kg

M_{Cdb}– Weight of test fuel crib, excluding nails and spacers, dry basis, kg

D_{Cdb} - Density of fuel crib, excluding spacers and nails, dry basis, lbs/ft^3

M_{FTAdb} - Total weight of fuel crib excluding nails, dry basis, kg

BR – Dry burn rate, kg/hr

V_s – Average gas velocity in the dilution tunnel, ft/sec

Q_{sd} – Average gas flow rate in dilution tunnel, dscf/hr

$V_{m(std)}$ – Volume of gas sampled, corrected to dry standard conditions, dscf

m_n – Total particulate matter collected, mg

C_s - Concentration of particulate matter in tunnel gas, dry basis, corrected to STP, g/dscf

E_T – Total particulate emissions, g

PR - Proportional rate variation

PM_R – Particulate emissions for test run, g/hr

PM_F – Particulate emission factor for test run, g/dry kg of fuel burned

M_{Sdb} – Weight of test fuel spacers, dry basis, kg
ASTM E2780 equation (1)

$$M_{Sdb} = (M_{Swb})(100/(100 + FM_S))$$

Where,

FM_S = average fuel moisture of test fuel spacers, % dry basis

M_{Swb} = weight of test fuel spacers, wet basis, kg

Sample Calculation:

FM_S = 16.0 %

M_{Swb} = 2.1 lbs

0.4536 = Conversion factor from lbs to kg

M_{Sdb} = [(2.1 x 0.4536) (100/(100 + 16.0)

M_{Sdb} = **0.81** kg

M_{Cdb}– Weight of test fuel crib, excluding nails and spacers, dry basis, kg
ASTM E2780 equation (2)

$$M_{Cdb} = \Sigma[(M_{CPnwb})(100/(100 + FM_{CPn}))]$$

Where,

M_{CPnwb} = weight of each test fuel piece n in fuel crib, excluding nails and spacers, wet basis, kg

FM_{CPn} = Average fuel moisture of test fuel n in fuel crib, % dry basis

Sample Calculation (test fuel piece 1):

MC_{Pnwb} = 4.01

FM_{CPn} = 19.5

= 4.0 (100/(100+ 19.5)

= 3.4 lbs

Total dry crib weight, excluding spacers = 13.73 lbs

M_{Cdb} = **6.23** kg

D_{Cdb} - Density of fuel crib, excluding spacers and nails, dry basis, lbs/ft^3
ASTM E2780 equation (3)

$$D_{Cdb} = M_{Cdb}/V_C$$

Where,

V_C = Volume of fuel crib, ft^3

Sample calculation:

V_C = 831.3 in^3

1728 = conversion from in^3 to ft^3

D_{Cdb} = 13.73 / 831.3 * 1728

= **28.53** lbs/ft^3

M_{FTAdb} - Total weight of fuel crib excluding nails, dry basis, kg
ASTM E2780 equation (4)

$$M_{FTAdb} = M_{Sdb} + M_{Cdb}$$

Sample calculation:

$$M_{FTAdb} = 0.81 + 6.23$$

$$= \mathbf{7.03} \text{ kg}$$

BR – dry burn rate, kg/hr
ASTM E2780 equation (5)

$$BR = \frac{60\ M_{FTAdb}}{\theta}$$

Where,

θ = Total length of test run, min

Sample Calculation:

M_{Bdb} = 7.03 kg
θ = 448 min

$$BR = \frac{60 \times 7.03}{448}$$

BR = **0.94** kg/hr

V_s – Average gas velocity in the dilution tunnel, ft/sec
ASTM E2515 equations (9)

$$v_s = F_P \times k_p \times C_p \times (\sqrt{\Delta P})_{avg} \times \sqrt{\frac{T_{s(avg)}}{P_s \times M_s}}$$

Where:

F_p	=	Adjustment factor for pitot tube center point reading = $\frac{V_{strav}}{V_{scent}}$, ASTM E2515 Equation (1)
v_{scent}	=	Dilution tunnel velocity calculated after the multi-point pitot traverse at the center, ft/sec
v_{strav}	=	Dilution tunnel velocity calculated after the multi-point pitot traverse, ft/sec
k_p	=	Pitot tube constant, 85.49
C_p	=	Pitot tube coefficient: 0.99, unitless
ΔP*	=	Velocity pressure in the dilution tunnel, in H_2O
T_s	=	Absolute average gas temperature in the dilution tunnel, °R; (°R = °F + 460)
P_s	=	Absolute average gas static pressure in dilution tunnel, = P_{bar} + P_g , in Hg
P_{bar}	=	Barometric pressure at test site, in. Hg
P_g	=	Static pressure of tunnel, in. H_20; (in Hg = in H_20/13.6)
M_s	=	
		**The dilution tunnel wet molecular weight; M_s = 28.78 assuming a dry weight of 29 lb/lb-mole

Sample calculation:

$$Fp = \frac{19.52}{20.27} = 0.963$$

$$V_s = 0.963 \times 85.49 \times 0.99 \times 0.297 \times \left(\frac{83.1 + 460}{\left(29.56 + \frac{-0.16}{13.6}\right) \times 28.78} \right)^{1/2}$$

V_s = **19.36** ft/s

*The ASTM test standard mistakenly has the square root of the average delta p instead of the average of the square root of delta p. The current EPA Method 2 is also incorrect. This was verified by Mike Toney at EPA.

**The ASTM test standard mistakenly identifies Ms as the dry molecular weight. It should be the wet molecular weight as indicated in EPA Method 2.

Q_{sd} – Average gas flow rate in dilution tunnel, dscf/hr
ASTM E2515 equation (3)

$$Q_{sd} = 3600 \times (1 - B_{ws}) \times v_s \times A \times \frac{T_{std}}{T_{s(avg)}} \times \frac{P_s}{P_{std}}$$

Where:

3600	=	Conversion from seconds to hours (ASTM method uses 60 to convert in minutes)
B_{ws}	=	Water vapor in gas stream, proportion by volume; assume 2%
A	=	Cross sectional area of dilution tunnel, ft^2
T_{std}	=	Standard absolute temperature, 528 °R
P_s	=	Absolute average gas static pressure in dilution tunnel, = P_{bar} + P_g , in Hg
$T_{s(avg)}$	=	Absolute average gas temperature in the dilution tunnel, °R; (°R = °F + 460)
P_{std}	=	Standard absolute pressure, 29.92 in Hg

Sample calculation:

$$Q_{sd} = 3600 \times (1 - 0.02) \times 19.36 \times 0.1963 \times \frac{528}{83.1 + 460} \times \frac{29.56 + \frac{-0.16}{13.6}}{29.92}$$

Q_{sd} = **12876.7** dscf/hr

$V_{m(std)}$ – Volume of Gas Sampled Corrected to Dry Standard Conditions, dscf
ASTM E2515 equation (6)

$$V_{m(std)} = K_1 \, V_m \, Y \frac{P_{bar} + \left(\frac{\Delta H}{13.6}\right)}{T_m}$$

Where:

K_1	=	17.64 °R/in. Hg
V_m	=	Volume of gas sample measured at the dry gas meter, dcf
Y	=	Dry gas meter calibration factor, dimensionless
P_{bar}	=	Barometric pressure at the testing site, in. Hg
ΔH	=	Average pressure differential across the orifice meter, in. H_2O
T_m	=	Absolute average dry gas meter temperature, °R

Sample Calculation:

Using equation for Train A:

$$V_{m(std)} = 17.64 \times 86.083 \times 1.004 \times \frac{\left(29.56 + \frac{3.61}{13.6}\right)}{(93.0 + 460)}$$

$V_{m(std)}$ = **82.223** dscf

Using equation for Train B:

$$V_{m(std)} = 17.64 \times 81.669 \times 1.004 \times \frac{\left(29.56 + \frac{3.33}{13.6}\right)}{(91.7 + 460)}$$

$V_{m(std)}$ = **78.134** dscf

Using equation for ambient train:

$$V_{m(std)} = 17.64 \times 48.58 \times 1.003 \times \frac{\left(\underline{29.56} + \frac{0.00}{13.6}\right)}{(64.6 + 460)}$$

$V_{m(std)}$ = **48.430** dscf

m_n – Total Particulate Matter Collected, mg
ASTM E2515 Equation (12)

$$m_n = m_p + m_f + m_g$$

Where:

m_p	=	mass of particulate matter from probe, mg
m_f	=	mass of particulate matter from filters, mg
m_g	=	mass of particulate matter from filter seals, mg

Sample Calculation:

Using equation for Train A:

m_n = 0.7 + 4.0 + 0.0

m_n = **4.7** mg

Using equation for Train B:

m_n = 0.3 + 4 + 0.1

m_n = **4.4** mg

C_s - Concentration of particulate matter in tunnel gas, dry basis, corrected to STP, g/dscf
ASTM E2515 equation (13)

$$C_s = K_2 \times \frac{m_n}{V_{m(std)}}$$

Where:

K_2	=	Constant, 0.001 g/mg
m_n	=	Total mass of particulate matter collected in the sampling train, mg
$V_{m(std)}$	=	Volume of gas sampled corrected to dry standard conditions, dscf

Sample calculation:

For Train A:

$$C_s = 0.001 \times \frac{4.7}{82.22}$$

C_s = **0.00006** g/dscf

For Train B

$$C_s = 0.001 \times \frac{4.4}{78.13}$$

C_s = **0.00006** g/dscf

For Ambient Train

$$C_r = 0.001 \times \frac{0.1}{48.43}$$

C_r = **0.000002** g/dscf

E_T – Total Particulate Emissions, g
ASTM E2515 equation (15)

$$E_T = (c_s - c_r) \times Q_{std} \times \theta$$

Where:

C_s	=	Concentration of particulate matter in tunnel gas, g/dscf
C_r	=	Concentration particulate matter room air, g/dscf
Q_{std}	=	Average dilution tunnel gas flow rate, dscf/hr
θ	=	Total time of test run, minutes

Sample calculation:

For Train A

E_T = (0.000057 - 0.000002) x 12876.7 x 448 /60

E_T = **5.30** g

For Train B

E_T = (0.000056 - 0.000002) x 12876.7 x 448 /60

E_T = **5.22** g

Average

E = **5.26** g

PR - Proportional Rate Variation

ASTM E2515 equation (16)

$$PR = \left[\frac{\theta \times V_{mi} \times V_s \times T_m \times T_{si}}{\theta_i \times V_m \times V_{si} \times T_{mi} \times T_s} \right] \times 100$$

Where:

θ	=	Total sampling time, min
θ_i	=	Length of recording interval, min
V_{mi}	=	Volume of gas sample measured by the dry gas meter during the “ith” time interval, dcf
V_m	=	Volume of gas sample as measured by dry gas meter, dcf
V_{si}	=	Average gas velocity in the dilution tunnel during the "ith" time interval, ft/sec
V_s	=	Average gas velocity in the dilution tunnel, ft/sec
T_{mi}	=	Absolute average dry gas meter temperature during the "ith" time interval, ^oR
T_m	=	Absolute average dry gas meter temperature, ^oR
T_{si}	=	Absolute average gas temperature in the dilution tunnel during the "ith" time interval, ^oR
T_s	=	Absolute average gas temperature in the dilution tunnel, ^oR

Sample calculation (for the first 10-min interval of Train 1):

$$PR = \left(\frac{448 \times 1.694 \times 19.36 \times (84.4 + 460) \times (93.0 + 460)}{10 \times 86.083 \times 19.56 \times (83.1 + 460) \times (71.4 + 460)} \right) \times 100$$

PR = **91** %

PM_R – Particulate emissions for test run, g/hr
ASTM E2780 equation (6)

$$PM_R = 60\ (E_T/\theta)$$

Where,

E_T = Total particulate emissions, grams

θ = Total length of full integrated test run, min

Sample Calculation:

E_T (Dual train average) = 5.26 g

θ = 448 min

$$PM_R = 60 \times (5.26 / 448)$$

PM_R = **0.70** g/hr

PM_F – Particulate emission factor for test run, g/dry kg of fuel burned
ASTM E2780 equation (7)

$$PM_F = E_T/M_{FTAdb}$$

Sample Calculation:

E_T (Dual train average)	=	5.26	g
M_{Bdb}	=	7.03	kg
PM_F =		5.26 / 7.03	
PM_F	=	**0.75**	g/kg

Stack Loss Efficiency and CO emissions calculations are done in accordance with CSA B415.1, using the password protected excel spreadsheet provided with the test standard. No alterations or alternative calculations are used for determining efficiency or CO emissions. The following pages are a sample of the calculations page from the B415.1 Spreadsheet (V2_4 - Dated April 15, 2010).

Manufacturer:	IHP
Model:	I3000
Date:	12/18/23
Run:	5
Control #:	23-229
Test Duration: 448	**min**

	HHV	LHV
Eff	**78.67%**	**85.03%**
Comb Eff	**98.47%**	**98.47%**
HT Eff	**79.90%**	**86.35%**
Output	**14,542**	**kJ/h**
Burn Rate	**0.93**	**kg/h**
Grams CO	**180**	**g**
Input	**18,483**	**kJ/h**
MC wet	**17.58**	

Note: In the "Input data", "Calc. % O_2", "Fuel Properties", and "Mass Balance" columns, [e], [d], [g], [a]. [b], [c], [h], [u], [w], [j], and [k] refer to their respective variables in Clauses 13.7.3 to 13.7.5.

Ultimate CO_2

$CO_{2\text{-ult}}$ 19.64

F_0

1.061

Overall Heating Efficiency:	78.67%	Air Fue		
Combustion Efficiency:	98.47%	Dry Molecular W		
Heat Transfer Efficiency:	79.90%	Dry Moles Exhaus		
		Air Fuel Ratio		
Heat Output:	13,794 Btu/h		14,542 kJ/h	
Heat Input:	17,533 Btu/h		18,483 kJ/h	
Burn Duration:	7.47	h		
Burn Rate:	2.06	lb/h	0.933 kg/h	
Stack Temp:	251.5 Deg. F		122.0 Deg. C	

	Averages	**0.15**	**7.89**	**1.60**	**20.41**	**12.44**	**122.10**	**18.09**	**99.1%**	**80.7%**	**80.0%**	**15.66**	**2.43**
INPUT DATA				**Oxygen Calculation**			**Input Data**		**Combust**	**Heat**	**Net**	**Air**	**Wet Wt**
Elapsed Time	**Weight Remaining (kg)**	**% CO [e]**	**% CO_2 [d]**	**Excess Air EA**	**Total O_2**	**Calc. % O_2 [g]**	**Flue Gas (°C)**	**Room Temp (°C)**	**Eff %**	**Transfer %**	**Eff %**	**Fuel Ratio**	**Now Wt**
0	8.45	0.04	3.83	407.7%	20.68	16.84	179.2	16.4	100.4%	62.6%	62.9%	30.7	8.45
1	8.44	0.04	2.77	599.8%	20.75	17.97	185.8	16.4	100.7%	51.5%	51.8%	42.4	8.44
2	8.39	0.46	4.38	305.6%	20.62	16.01	160.2	16.6	92.9%	68.6%	63.7%	24.1	8.39
3	8.33	0.22	7.83	143.9%	20.41	12.46	164.0	16.3	98.1%	76.8%	75.4%	14.7	8.33
4	8.26	0.12	9.22	110.4%	20.32	11.05	178.3	16.6	99.3%	77.5%	76.9%	12.7	8.26
5	8.18	0.12	9.49	104.4%	20.31	10.75	197.6	16.4	99.3%	76.3%	75.8%	12.3	8.18
6	8.13	0.12	9.47	105.0%	20.31	10.78	173.7	16.3	99.3%	78.1%	77.5%	12.4	8.13
7	8.10	0.04	6.23	213.6%	20.53	14.28	161.7	16.2	100.2%	74.2%	74.4%	18.9	8.10
8	8.06	0.03	5.87	233.0%	20.55	14.67	154.9	16.1	100.3%	74.1%	74.3%	20.1	8.06
9	8.04	0.04	5.95	228.1%	20.54	14.58	151.4	16.0	100.2%	74.7%	74.9%	19.8	8.04
10	7.99	0.04	6.11	219.4%	20.53	14.40	148.1	16.1	100.2%	75.5%	75.6%	19.3	7.99
11	7.96	0.04	6.24	212.7%	20.53	14.26	145.5	16.0	100.1%	76.0%	76.1%	18.9	7.96
12	7.93	0.05	6.33	208.2%	20.52	14.17	143.6	15.9	100.0%	76.3%	76.4%	18.6	7.93
13	7.90	0.06	6.41	203.7%	20.51	14.07	143.2	16.1	99.9%	76.6%	76.5%	18.3	7.90
14	7.86	0.04	6.48	201.2%	20.51	14.01	143.4	16.1	100.1%	76.7%	76.7%	18.2	7.86
15	7.83	0.04	6.57	197.1%	20.50	13.91	143.8	15.9	100.1%	76.8%	76.8%	17.9	7.83
16	7.79	0.05	6.70	191.0%	20.49	13.77	144.6	15.8	100.0%	76.9%	76.9%	17.6	7.79
17	7.74	0.05	6.79	187.3%	20.49	13.68	144.6	15.9	100.0%	77.1%	77.1%	17.4	7.74
18	7.70	0.05	6.91	182.5%	20.48	13.55	144.7	15.8	100.0%	77.2%	77.2%	17.1	7.70
19	7.66	0.05	7.00	178.6%	20.47	13.45	144.4	15.6	100.0%	77.4%	77.4%	16.8	7.66
20	7.62	0.05	7.10	175.0%	20.47	13.35	144.9	15.4	100.0%	77.5%	77.5%	16.6	7.62
21	7.58	0.05	7.20	171.1%	20.46	13.24	145.1	15.8	99.9%	77.6%	77.6%	16.4	7.58
22	7.54	0.05	7.23	169.9%	20.46	13.20	145.2	15.9	100.0%	77.7%	77.7%	16.3	7.54
23	7.50	0.05	7.28	168.1%	20.46	13.15	145.6	15.7	100.0%	77.7%	77.7%	16.2	7.50
24	7.45	0.05	7.37	164.5%	20.45	13.05	145.2	15.7	99.9%	77.9%	77.8%	16.0	7.45
25	7.42	0.05	7.50	160.2%	20.44	12.92	145.6	15.7	99.9%	78.0%	78.0%	15.7	7.42
26	7.37	0.05	7.59	157.2%	20.44	12.82	146.2	15.4	99.9%	78.1%	78.0%	15.5	7.37
27	7.34	0.05	7.70	153.6%	20.43	12.71	146.1	15.4	99.9%	78.2%	78.1%	15.3	7.34
28	7.30	0.05	7.75	151.8%	20.42	12.65	146.7	15.5	99.9%	78.2%	78.1%	15.2	7.30
29	7.27	0.05	7.74	152.1%	20.43	12.66	147.2	15.9	99.9%	78.2%	78.1%	15.2	7.27
30	7.23	0.05	7.85	148.6%	20.42	12.54	147.0	16.2	99.9%	78.4%	78.3%	15.0	7.23
31	7.19	0.06	7.99	144.0%	20.41	12.39	146.3	16.5	99.8%	78.6%	78.5%	14.7	7.19
32	7.16	0.06	8.15	139.3%	20.40	12.22	146.2	16.7	99.8%	78.9%	78.7%	14.5	7.16
33	7.11	0.07	8.27	135.6%	20.39	12.08	147.2	16.8	99.8%	78.9%	78.7%	14.2	7.11
34	7.08	0.07	8.57	127.3%	20.37	11.76	148.4	16.9	99.7%	79.2%	79.0%	13.7	7.08
35	7.04	0.08	8.76	122.3%	20.36	11.56	148.6	17.1	99.6%	79.4%	79.0%	13.4	7.04
36	7.00	0.08	8.99	116.6%	20.34	11.31	150.1	17.2	99.7%	79.5%	79.2%	13.1	7.00
37	6.96	0.08	9.18	112.2%	20.33	11.11	151.4	17.3	99.7%	79.6%	79.3%	12.8	6.96

el Ratio (A/F)		
Veight (M_d)	29.76	
st Gas (N_r):	528.30	%HC
o (A/F)	15.21	0.88

Combustion Efficiency:	98.47%	
Total Input (kJ):	138,008	130,894 (Btu)
Total Output (kJ):	108,577	102,980 (Btu)
Efficiency:	78.67%	
Total CO (g):	180.37	

Moisture of Wood (wet basis):	17.5824
Initial Dry Weight Wt_{do} (kg):	6.97
Moisture Content Dry	21.33

Load Weight (kg):	**8.45**			
Fuel Heating	**HHV**	**LHV**		**HHV**
Value in kj/kg - CV:	**19,810**	**18,329**	Btu/lb	**8522.5**

71.28	**2.16**	**69.05**	**138137**	**4.06**	**6.87**	**2.74**	**19810.00**	**17.58**	**79.52**	**21.09**	**1.98**	**6.80**	**0.00**	**0.20**	**40.17**
% Wet Consumed	**Dry Wt. Now**	**% Dry Comsumed**	**Total Input**	**Fuel Properties**				**Mw Moisture Fuel Burnt**	**Mass Balance (moles/100 mole dry flue gas)**					**kg Wood per 100 mole dfp**	
				Carbon /12= [a]	**Hydrogen /1= [b]**	**Oxygen /16= [c]**	**Calorific Value**								
x	**Wt_{dn}**	**y**							**[h]**	**[u]**	**[w]**	**[j]**	**[k]**	**Nk**	**CO_2**
0.00	6.97	0.00	0	4.06	6.87	2.74	19810.00	17.58	79.30	21.03	0.95	3.30	-0.02	0.09	40.61
0.11	6.96	0.11	556	4.06	6.87	2.74	19810.00	17.58	79.22	21.01	0.69	2.40	-0.02	0.07	40.55
0.70	6.92	0.70	889	4.06	6.87	2.74	19810.00	17.58	79.15	20.99	1.20	4.05	0.04	0.12	36.60
1.40	6.87	1.40	1074	4.06	6.87	2.74	19810.00	17.58	79.48	21.08	1.99	6.80	0.01	0.20	39.63
2.25	6.81	2.25	1296	4.06	6.87	2.74	19810.00	17.58	79.62	21.12	2.30	7.90	0.00	0.23	40.30
3.27	6.74	3.27	1074	4.06	6.87	2.74	19810.00	17.58	79.64	21.12	2.37	8.13	0.00	0.24	40.31
3.81	6.70	3.81	630	4.06	6.87	2.74	19810.00	17.58	79.63	21.12	2.36	8.11	0.00	0.23	40.32
4.19	6.67	4.19	556	4.06	6.87	2.74	19810.00	17.58	79.46	21.08	1.54	5.32	-0.02	0.15	40.69
4.62	6.65	4.62	519	4.06	6.87	2.74	19810.00	17.58	79.43	21.07	1.45	5.01	-0.02	0.14	40.72
4.94	6.62	4.94	556	4.06	6.87	2.74	19810.00	17.58	79.44	21.07	1.47	5.08	-0.02	0.15	40.68
5.42	6.59	5.42	630	4.06	6.87	2.74	19810.00	17.58	79.45	21.07	1.51	5.22	-0.02	0.15	40.67
5.85	6.56	5.85	519	4.06	6.87	2.74	19810.00	17.58	79.45	21.08	1.54	5.33	-0.02	0.15	40.66
6.17	6.54	6.17	444	4.06	6.87	2.74	19810.00	17.58	79.46	21.08	1.57	5.41	-0.02	0.16	40.61
6.49	6.51	6.49	556	4.06	6.87	2.74	19810.00	17.58	79.46	21.08	1.59	5.49	-0.01	0.16	40.55
6.98	6.48	6.98	630	4.06	6.87	2.74	19810.00	17.58	79.47	21.08	1.60	5.53	-0.02	0.16	40.65
7.41	6.45	7.41	593	4.06	6.87	2.74	19810.00	17.58	79.48	21.08	1.62	5.61	-0.02	0.16	40.65
7.84	6.42	7.84	704	4.06	6.87	2.74	19810.00	17.58	79.48	21.08	1.66	5.73	-0.02	0.17	40.61
8.43	6.38	8.43	704	4.06	6.87	2.74	19810.00	17.58	79.49	21.08	1.68	5.80	-0.02	0.17	40.61
8.86	6.35	8.86	630	4.06	6.87	2.74	19810.00	17.58	79.50	21.09	1.71	5.90	-0.01	0.17	40.62
9.34	6.32	9.34	667	4.06	6.87	2.74	19810.00	17.58	79.50	21.09	1.73	5.98	-0.01	0.17	40.63
9.82	6.28	9.82	667	4.06	6.87	2.74	19810.00	17.58	79.51	21.09	1.76	6.06	-0.01	0.17	40.63
10.31	6.25	10.31	704	4.06	6.87	2.74	19810.00	17.58	79.51	21.09	1.78	6.15	-0.01	0.18	40.60
10.84	6.21	10.84	667	4.06	6.87	2.74	19810.00	17.58	79.52	21.09	1.79	6.17	-0.01	0.18	40.64
11.27	6.18	11.27	667	4.06	6.87	2.74	19810.00	17.58	79.52	21.09	1.80	6.21	-0.01	0.18	40.62
11.81	6.14	11.81	667	4.06	6.87	2.74	19810.00	17.58	79.52	21.09	1.83	6.30	-0.01	0.18	40.59
12.24	6.11	12.24	667	4.06	6.87	2.74	19810.00	17.58	79.53	21.10	1.86	6.40	-0.01	0.18	40.60
12.78	6.08	12.78	667	4.06	6.87	2.74	19810.00	17.58	79.54	21.10	1.88	6.48	-0.01	0.19	40.60
13.20	6.05	13.20	556	4.06	6.87	2.74	19810.00	17.58	79.55	21.10	1.90	6.57	-0.01	0.19	40.61
13.58	6.02	13.58	556	4.06	6.87	2.74	19810.00	17.58	79.55	21.10	1.92	6.61	-0.01	0.19	40.59
14.01	5.99	14.01	630	4.06	6.87	2.74	19810.00	17.58	79.55	21.10	1.92	6.61	-0.01	0.19	40.61
14.49	5.96	14.49	630	4.06	6.87	2.74	19810.00	17.58	79.55	21.10	1.94	6.70	-0.01	0.19	40.60
14.92	5.93	14.92	593	4.06	6.87	2.74	19810.00	17.58	79.56	21.10	1.98	6.82	-0.01	0.20	40.55
15.35	5.90	15.35	630	4.06	6.87	2.74	19810.00	17.58	79.57	21.11	2.02	6.96	-0.01	0.20	40.56
15.83	5.86	15.83	630	4.06	6.87	2.74	19810.00	17.58	79.58	21.11	2.05	7.07	-0.01	0.20	40.54
16.26	5.83	16.26	593	4.06	6.87	2.74	19810.00	17.58	79.60	21.11	2.13	7.32	-0.01	0.21	40.53
16.69	5.80	16.69	667	4.06	6.87	2.74	19810.00	17.58	79.60	21.11	2.17	7.48	-0.01	0.22	40.47
17.23	5.77	17.23	704	4.06	6.87	2.74	19810.00	17.58	79.62	21.12	2.23	7.68	-0.01	0.22	40.51
17.71	5.73	17.71	704	4.06	6.87	2.74	19810.00	17.58	79.63	21.12	2.28	7.84	-0.01	0.23	40.51

Moisture Content M_{Cwb}: 17.58242

Dry kg : 6.97

CA: 49

HY: 7

OX: 43.9

LHV
7885.2

69.84	**0.66**	**-0.02**	**429.16**	**34.56**	**11.85**	**395.25**	**4120.08**	**3110.74**	**3027.44**	**2993.37**	**3944.13**	**3623.60**	**291.24**	**74146.06**	**89419.31**
Moles per kg of Dry Wood					**Moisture**	**Stack Temp**	**Heat Content Change - Ambient to Stack Temperature Flue Gas Constituent**						**Room Temp**		
O_2	**CO**	**HC**	**N_2**	**H_2O**	**Present**	**K**	**CO_2**	**O_2**	**CO**	**N_2**	**CH_4**	**H_2O**	**K**	**CO_2**	**O_2**
178.57	0.42	-0.23	841.07	34.97	11.85	452.37	6561.81	4904.64	4761.14	4710.10	6390.31	5694.84	289.54	266.50	875.83
263.40	0.60	-0.34	1161.38	35.19	11.85	458.98	6844.47	5108.81	4957.58	4904.81	6681.13	5929.25	289.54	277.53	1345.66
133.75	3.87	0.35	661.29	33.83	11.85	433.37	5750.20	4315.15	4193.14	4147.30	5562.37	5016.81	289.71	210.43	577.17
63.07	1.12	0.06	402.15	34.40	11.85	437.15	5917.92	4437.66	4311.36	4264.40	5731.94	5157.98	289.48	234.54	279.87
48.30	0.52	0.00	348.11	34.53	11.85	451.48	6517.58	4872.32	4729.95	4679.21	6345.62	5657.59	289.71	262.65	235.35
45.67	0.50	0.00	338.21	34.52	11.85	470.71	7348.76	5471.79	5306.50	5250.71	7202.80	6345.49	289.54	296.24	249.91
45.91	0.50	0.00	339.12	34.53	11.85	446.87	6329.73	4736.71	4599.50	4549.91	6152.17	5501.94	289.48	255.19	217.48
93.33	0.24	-0.12	519.24	34.75	11.85	434.82	5823.70	4369.27	4245.48	4199.12	5635.72	5079.35	289.37	236.98	407.78
101.83	0.22	-0.13	551.43	34.79	11.85	428.09	5545.23	4166.40	4049.85	4005.31	5352.99	4845.76	289.26	225.81	424.26
99.67	0.26	-0.12	543.13	34.77	11.85	424.54	5400.46	4060.80	3947.98	3904.40	5206.28	4724.13	289.15	219.66	404.72
95.86	0.26	-0.12	528.72	34.76	11.85	421.21	5259.01	3957.21	3847.95	3805.33	5063.85	4604.64	289.21	213.88	379.32
92.92	0.27	-0.11	517.59	34.74	11.85	418.65	5154.50	3880.74	3774.13	3732.21	4958.48	4516.47	289.15	209.56	360.59
90.97	0.31	-0.10	510.10	34.73	11.85	416.76	5080.04	3826.32	3721.60	3680.19	4883.25	4453.74	289.04	206.28	348.08
89.00	0.35	-0.09	502.50	34.71	11.85	416.32	5053.11	3806.22	3702.10	3660.89	4856.98	4430.41	289.26	204.90	338.75
87.90	0.26	-0.10	498.62	34.73	11.85	416.59	5066.78	3816.33	3711.89	3670.58	4870.51	4442.12	289.21	205.97	335.46
86.11	0.26	-0.10	491.84	34.72	11.85	416.98	5087.18	3831.47	3726.56	3685.10	4890.62	4459.65	289.09	206.81	329.91
83.42	0.30	-0.09	481.57	34.70	11.85	417.71	5121.47	3856.79	3751.06	3709.35	4924.69	4488.94	288.98	207.96	321.72
81.83	0.29	-0.09	475.60	34.70	11.85	417.76	5119.57	3855.22	3749.50	3707.82	4923.17	4487.06	289.09	207.93	315.48
79.72	0.28	-0.09	467.61	34.70	11.85	417.87	5130.52	3863.51	3757.58	3715.80	4933.59	4496.73	288.93	208.39	307.98
78.01	0.27	-0.09	461.20	34.69	11.85	417.59	5125.27	3859.92	3754.18	3712.42	4927.74	4492.69	288.76	208.22	301.13
76.41	0.26	-0.08	455.16	34.69	11.85	418.09	5152.42	3880.09	3773.72	3731.77	4954.45	4516.06	288.59	209.36	296.47
74.72	0.29	-0.08	448.71	34.68	11.85	418.26	5146.72	3875.39	3769.05	3727.16	4949.88	4510.43	288.93	208.97	289.58
74.19	0.26	-0.08	446.80	34.69	11.85	418.32	5144.82	3873.82	3767.49	3725.63	4948.36	4508.56	289.04	209.06	287.41
73.41	0.27	-0.08	443.79	34.68	11.85	418.71	5167.35	3890.60	3783.76	3741.73	4970.43	4528.01	288.87	209.92	285.60
71.84	0.30	-0.07	437.77	34.67	11.85	418.37	5155.56	3882.05	3775.52	3733.57	4958.39	4518.18	288.82	209.25	278.87
69.96	0.28	-0.07	430.73	34.67	11.85	418.76	5169.67	3892.30	3785.40	3743.35	4972.76	4529.97	288.87	209.90	272.32
68.65	0.28	-0.07	425.78	34.66	11.85	419.37	5205.68	3919.13	3811.43	3769.11	5008.01	4561.10	288.59	211.37	269.06
67.06	0.27	-0.07	419.76	34.66	11.85	419.21	5200.83	3915.67	3808.11	3765.81	5002.95	4557.14	288.54	211.18	262.57
66.31	0.28	-0.07	416.89	34.65	11.85	419.82	5222.11	3931.08	3822.95	3780.52	5024.74	4574.85	288.65	211.99	260.65
66.42	0.27	-0.07	417.34	34.66	11.85	420.37	5230.54	3936.63	3828.15	3785.71	5034.60	4581.01	289.04	212.39	261.46
64.87	0.28	-0.06	411.48	34.65	11.85	420.15	5208.63	3920.04	3812.00	3769.74	5013.71	4561.68	289.37	211.45	254.30
62.91	0.31	-0.06	403.96	34.63	11.85	419.48	5170.28	3891.51	3784.33	3742.36	4976.09	4528.59	289.65	209.67	244.82
60.82	0.31	-0.05	396.06	34.63	11.85	419.32	5154.90	3879.88	3773.01	3731.17	4961.38	4515.05	289.87	209.07	235.97
59.21	0.32	-0.05	389.93	34.62	11.85	420.32	5194.50	3908.81	3800.93	3758.82	5001.44	4548.38	289.93	210.60	231.43
55.61	0.33	-0.04	376.33	34.61	11.85	421.54	5239.20	3941.28	3832.21	3789.81	5047.04	4585.72	290.09	212.33	219.19
53.44	0.37	-0.03	367.97	34.59	11.85	421.71	5241.95	3943.11	3833.93	3791.53	5050.19	4587.76	290.21	212.17	210.71
50.95	0.34	-0.03	358.64	34.59	11.85	423.21	5298.31	3984.08	3873.42	3830.66	5107.60	4634.91	290.37	214.62	202.98
49.02	0.34	-0.03	351.35	34.58	11.85	424.54	5351.97	4023.25	3911.20	3868.09	5161.95	4680.03	290.43	216.79	197.21

SUMS					AVERAGE	SUMS						
84433.02	547039.87	-6643.13	738364.59	253265.19	3964.42	29422.69	2104.31	27318.37	108714.03	2113.08	180.37	5.06
Energy Losses (kJ/kg of Dry Fuel) Flue Gas Constituent					Total Loss Rate	Total Loss	Chemical Loss 1	Sensible and Latent Loss	Total Output	Chem Loss 2	Grams Produced	
CO	N_2	CH_4	H_2O Comb	H_2O Fuel MC							CO	HC
122.06	3961.55	-202.13	1736.92	588.61	7349.34	0.00	0	0.00	0	0	0.00	0.00
173.07	5696.34	-301.48	1756.17	591.39	9538.66	267.52	-4	271.14	288	-4	0.47	-0.15
1110.95	2742.57	312.34	1656.96	580.58	7191.00	322.68	63	259.63	566	63	4.86	0.25
321.26	1714.94	55.12	1689.95	582.25	4877.94	264.49	20	244.36	810	20	1.70	0.05
148.44	1628.86	-2.25	1713.49	588.17	4574.72	299.37	9	289.96	997	9	0.95	0.00
144.48	1775.82	-0.39	1737.03	596.32	4799.42	260.23	8	252.57	814	8	0.76	0.00
143.29	1542.98	-1.11	1707.99	586.33	4452.15	141.51	4	137.07	488	4	0.44	0.00
67.57	2180.34	-103.79	1704.64	581.32	5074.85	142.33	-1	143.35	413	-1	0.18	-0.05
63.76	2208.63	-117.71	1698.05	578.55	5081.35	133.01	-1	134.43	386	-1	0.16	-0.06
74.55	2120.60	-109.66	1692.94	577.11	4979.92	139.67	-1	140.66	416	-1	0.20	-0.05
74.45	2011.97	-104.19	1688.20	575.69	4839.32	153.82	-1	154.78	476	-1	0.23	-0.06
76.59	1931.76	-98.96	1684.57	574.65	4738.75	124.04	-1	124.64	395	-1	0.20	-0.05
88.35	1877.27	-90.79	1681.50	573.90	4684.60	105.11	0	105.18	339	0	0.19	-0.04
101.53	1839.61	-81.95	1679.74	573.63	4656.20	130.59	1	130.06	425	1	0.28	-0.04
75.55	1830.24	-92.19	1681.25	573.77	4610.05	146.53	-1	147.08	483	-1	0.23	-0.05
74.52	1812.50	-90.08	1681.63	573.97	4589.27	137.29	0	137.77	455	0	0.22	-0.05
85.13	1786.30	-81.39	1681.71	574.32	4575.75	162.55	0	162.44	541	0	0.30	-0.05
82.35	1763.44	-80.37	1681.53	574.30	4544.67	161.45	0	161.40	542	0	0.29	-0.05
80.96	1737.56	-77.96	1681.61	574.41	4512.95	143.45	0	143.37	486	0	0.25	-0.04
78.18	1712.18	-76.77	1681.34	574.37	4478.64	150.73	0	150.70	516	0	0.26	-0.05
75.52	1698.55	-75.68	1682.03	574.64	4460.89	150.13	0	150.16	517	0	0.25	-0.05
82.53	1672.41	-70.06	1681.23	574.58	4439.23	157.70	0	157.28	546	0	0.29	-0.04
74.12	1664.61	-73.12	1681.49	574.55	4418.12	148.69	0	148.68	518	0	0.24	-0.04
76.82	1660.56	-70.76	1681.91	574.78	4418.83	148.72	0	148.53	518	0	0.25	-0.04
85.25	1634.43	-64.67	1680.91	574.67	4398.71	148.04	1	147.37	519	1	0.28	-0.04
80.76	1612.38	-64.01	1681.25	574.81	4367.41	146.99	1	146.45	520	1	0.27	-0.04
79.84	1604.82	-62.55	1682.17	575.18	4359.88	146.73	1	146.17	520	1	0.26	-0.04
78.70	1580.72	-60.77	1681.84	575.13	4329.37	121.42	0	120.94	434	0	0.22	-0.03
81.17	1576.06	-58.57	1682.21	575.34	4328.86	121.41	1	120.79	434	1	0.22	-0.03
78.25	1579.92	-60.06	1682.59	575.41	4329.96	137.63	1	137.07	492	1	0.24	-0.03
80.10	1551.15	-56.98	1681.58	575.18	4296.79	136.58	1	135.86	493	1	0.25	-0.03
90.28	1511.75	-49.53	1679.63	574.79	4261.41	127.48	1	126.29	465	1	0.26	-0.03
88.50	1477.79	-47.32	1678.92	574.63	4217.55	134.06	1	132.78	496	1	0.27	-0.03
91.34	1465.69	-43.71	1679.68	575.03	4210.06	133.82	1	132.33	496	1	0.28	-0.02
93.57	1426.21	-37.53	1680.31	575.47	4169.55	124.73	2	123.09	468	2	0.27	-0.02
106.07	1395.16	-28.71	1679.42	575.49	4150.31	139.68	3	137.12	527	3	0.35	-0.02
96.91	1373.82	-29.30	1681.12	576.05	4116.20	146.23	2	143.87	558	2	0.34	-0.02
96.20	1359.04	-26.84	1682.41	576.59	4101.39	145.70	2	143.28	558	2	0.33	-0.02

Appendix B: Labels & Manuals

Tested and listed to:

0219WN026S

LISTED MASONRY FIREPLACE INSERT
CERTIFIED FOR USE IN CANADA AND U.S.A./HOMOLOGUÉ POUR UNE UTILISATION AU CANADA ET AUX ÉTATS-UNIS
MODEL/MODÈLE : I3000A/I3000R CERTIFIED TO /HOMOLOGUÉ : CAN/ULC 628:2022/ UL-1482-2022 - PFS PROJECT # 23-229

DO NOT REMOVE THIS LABEL/NE PAS RETIRER CETTE ÉTIQUETTE

REGENCY FIREPLACE PRODUCTS

U.S. ENVIRONMENTAL PROTECTION AGENCY CERTIFIED TO COMPLY WITH 2020 PARTICULATE EMISSION STANDARDS USING CRIB WOOD." TESTED TO METHOD 28R, E2780-10, E2515-11. MODEL REGENCY I3000A/I3000R 0.95 G /HR. THIS WOOD HEATER NEEDS PERIODIC INSPECTION AND INSPECTION FOR PROPER OPERATION. CONSULT THE OWNER'S MANUAL FOR FURTHER INFORMATION. IT IS AGAINST FEDERAL REGULATIONS TO OPERATE THIS WOOD HEATER IN A MANNER INCONSISTENT WITH THE OPERATING INSTRUCTIONS IN THE OWNER'S MANUAL. **COMPONENTS REQUIRED FOR INSTALLATION: 5.5" (140mm) or 6" (152mm) STAINLESS STEEL LINER.**
CERTIFIÉ CONFORME AUX NORMES 2020 DU U.S. ENVIRONMENTAL PROTECTION AGENCY EN MATIÈRE D'ÉMISSION DE PARTICULES DE BOIS AVEC DU BOIS D'ESSAI NORMALISÉ (CRIB WOOD). HOMOLOGUÉ SELON LA MÉTHODE 28R, E2780-10, E2515-11. MODÈLE REGENCY I3000A/I3000R 0,95 G /H. CET APPAREIL DE CHAUFFAGE AU BOIS DOIT ÊTRE INSPECTÉ PÉRIODIQUEMENT ET RÉPARÉ POUR FONCTIONNER CORRECTEMENT. CONSULTER LE MANUEL D'INSTALLATION POUR PLUS D'INFORMATION. LA RÉGLEMENTATION FÉDÉRALE INTERDIT DE FAIRE FONCTIONNER UN TEL APPAREIL SI LES CONSIGNES D'UTILISATION CONTENUES DANS LE PRÉSENT MANUEL NE SONT PAS RESPECTÉES.
PIÈCES REQUISES POUR L'INSTALLATION : DOUBLURE EN ACIER INOXYDABLE DE 5,5 PO (140 mm) OU 6 PO (152 mm)

INSTALL AND USE ONLY IN ACCORDANCE WITH THE MANUFACTURER'S INSTALLATION AND OPERATING INSTRUCTIONS. INSTALL AND USE ONLY IN MASONRY FIREPLACE. NOT TO BE INSTALLED IN ANY FACTORY-BUILT FIREPLACE. CONTACT LOCAL BUILDING OR FIRE OFFICIALS ABOUT RESTRICTIONS AND INSTALLATION INSPECTION IN YOUR AREA.
INSTALLER ET UTILISER SELON LES INSTRUCTIONS DU FABRICANT. INSTALLER ET UTILISER DANS UN FOYER DE MAÇONNERIE OU PRÉFABRIQUÉ.
APPELER UN INSPECTEUR EN BÂTIMENT OU LE DÉPARTEMENT INCENDIE LOCAL POUR CONNAÎTRE LES RESTRICTIONS ET LESCONDITIONS D'INSPECTION À L'INSTALLATION DANS VOTRE SECTEUR.
FLOOR THERMAL INSULATION/PROTECTION WITH A R VALUE OF XX IS REQUIRED IF THE UNIT IS RAISED XX" (XXMM) (MEASURED FROM THE BOTTOM OF THE APPLIANCE).
THERMAL FLOOR PROTECTION IS NOT REQUIRED WHEN UNIT IS RAISER GREATER THAN XX" (XXMM) (MEASURED FROM THE BOTTOM OF THE APPLIANCE).
INSTALLER OBLIGATOIREMENT UNE ISOLATION/PROTECTION THERMIQUE D'UNE VALEUR R DE XX SI L'APPAREIL EST INSTALLÉ À UNE DISTANCE INFÉRIEURE À XX PO (XX MM) DU SOCLE (MESURE PRISE À PARTIR DU BAS DE L'APPAREIL).
LA PROTECTION THERMIQUE N'EST PAS REQUISE SI L'APPAREIL SE TROUVE À PLUS DE XX PO (XXMM) DU SOCLE (MESURE PRISE À PARTIR DU BAS DE L'APPAREIL).

920-723

MINIMUM CLEARANCES TO COMBUSTIBLE MATERIALS (MEASURED FROM INSERT BODY)

ADJACENT SIDEWALL MANTEL	A)12 in / 305 mm
	B)14 in / 356 mm (3-1/2" MANTEL)
	B)16 in / 406 mm (12" MANTEL)
TOP FACING	C)14 in / 356 mm
SIDE FACING	D)0.5 in / 13 mm (TO SIDE SURROUND)

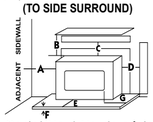

Serial No./ No de série

600

OPTIONAL COMPONENT: FAN (166-917), ELECTRICAL RATING: VOLTS 115, 60 HZ, 0.6 AMPS
DANGER: RISK OF ELECTRIC SHOCK. DISCONNECT POWER BEFORE SERVICING UNIT. DO NOT ROUTE POWER CORD UNDER OR IN FRONT OF APPLIANCE. DO NOT CONNECT THIS UNIT TO A CHIMNEY FLUE SERVICING ANOTHER APPLIANCE. DO NOT REMOVE BRICKS OR MORTAR IN MASONRY FIREPLACE. FOR USE WITH SOLID WOOD FUEL ONLY. DO NOT USE GRATE OR ELEVATE FIRE. BUILD WOOD FIRE DIRECTLY ON HEARTH. RISK OF SMOKE AND FLAME SPILLAGE, OPERATE ONLY WITH DOORS FULLY OPEN OR FULLY CLOSED. OPEN FEED DOOR TO FEED FIRE ONLY. REPLACE GLASS ONLY WITH CERAMIC GLASS (5MM). INSPECT AND CLEAN CHIMNEY FREQUENTLY. UNDER CERTAIN CONDITIONS OF USE CREOSOTE BUILDUP MAY OCCUR RAPIDLY. DO NOT OVERFIRE, IF INSERT GLOWS YOU ARE OVER-FIRING. CATALYTIC COMBUSTOR PART#166-571.

PIÈCE FACULTATIVE : VENTILATEUR (166-917); PUISSANCE ÉLECTRIQUE : 115 VOLTS, 60 HZ, 0,6 A
DANGER : RISQUE D'ÉLECTROCUTION. DÉBRANCHER L'APPAREIL AVANT TOUTE RÉPARATION. NE PAS FAIRE PASSER LE FIL ÉLECTRIQUE DEVANT L'APPAREIL NI EN DESSOUS. NE PAS RELIER CET APPAREIL À UNE CHEMINÉE DESTINÉE À L'ÉVACUATION D'UN AUTRE APPAREIL. NE PAS ENLEVER DE BRIQUES NI DE MORTIER D'UNE CHEMINÉE DE MAÇONNERIE. N'UTILISER QUE DU COMBUSTIBLE DE BOIS SOLIDE. NE PAS SURÉLEVER LES BÛCHES NI LES PLACER SUR DES GRILLES, MAIS LES DÉPOSER DIRECTEMENT SUR L'ÂTRE. RISQUE DE DÉGAGEMENT DE FUMÉE OU DE FLAMMES : TOUJOURS GARDER LES PORTES COMPLÈTEMENT OUVERTES OU FERMÉES LORSQUE L'APPAREIL FONCTIONNE. DANS UNE MAISON MOBILE, TOUJOURS GARDER LES PORTES BIEN FERMÉES LORSQUE L'APPAREIL FONCTIONNE. OUVRIR LA PORTE UNIQUEMENT POUR ALIMENTER LE FEU. SI LES PORTES DU POÊLE RESTENT OUVERTES, TOUJOURS UTILISER LE PARE-ÉTINCELLES FOURNI PAR LE FABRICANT. REMPLACER LA VITRE UNIQUEMENT PAR UNE VITRE EN VITROCÉRAMIQUE (5 MM). INSPECTER ET NETTOYER FRÉQUEMMENT LA CHEMINÉE. SELON LE TYPE D'USAGE, DE LA CRÉOSOTE PEUT S'ACCUMULER RAPIDEMENT. NE PAS SURCHAUFFER; SI L'ENCASTRABLE SE MET À ROUGIR, IL SURCHAUFFE. CATALYSEUR DE POSTCOMBUSTION PIÈCE N°166-571

CAUTION / ATTENTION

HOT WHILE IN OPERATION DO NOT TOUCH. KEEP CHILDREN, CLOTHING AND FURNITURE AWAY. CONTACT MAY CAUSE SKIN BURNS. READ ABOVE INSTRUCTIONS.

SURFACES CHAUDES LORS DE FONCTIONNEMENT. NEPASTOUCHER.ÉLOIGNERLESENFANTS,LESVÊTEMENTSET LES MEUBLES. TOUT CONTACT AVEC LA PEAU PEUT OCCASIONNER DES BRÛLURES. LIRE LES CONSIGNES DE CET APPAREIL.

Manufactured By:
FIREPLACE PRODUCTS INTERNATIONAL LTD.
6988 VENTURE ST., DELTA, BC V4G 1H4
MADE IN CANADA
920-723

DATE OF MANUFACTURE

Jan ☐ Feb ☐ Mar ☐ Apr ☐ May ☐ June ☐
2024 ☐
2025 ☐
2026 ☐
2027 ☐
2028 ☐
July ☐ Aug ☐ Sept ☐ Oct ☐ Nov ☐ Dec ☐

(Duplicate Serial #) 600

Part #: **920-723**

Size: **3" H x 20-1/2" W (file at 100%)**

Colour: **Black on grey, except for what is indicated as being printed red on grey.**

Jan 05/24: Created decal

REGENCY
FIREPLACE PRODUCTS

Alterra Pro™
i3000A/i3000R Wood Fireplace Insert

Owners & Installation Manual

MODEL: i3000A/i3000R

Tested & listed by:
O-TL
0219WN032S

***Installer*: Please complete the details on the back cover and leave this manual with the homeowner.**
***Homeowner:* Please keep these instructions for future reference.**

Thank you for purchasing a
REGENCY FIREPLACE PRODUCT.

The pride of workmanship that goes into each of our products will give you years of trouble-free enjoyment. Should you have any questions about your product that are not covered in this manual, please contact the **REGENCY DEALER** in your area.

"This wood heater has a manufacturer set minimum low burn rate that must not be altered. It is against federal regulations to alter this setting or otherwise operate this wood heater in a manner inconsistent with operating instructions in this manual." Failure to follow the manual details can lead to smoke and CO emissions spilling into the home. It is recommended to have monitors in areas that are expected to generate CO such as heater fueling areas.

"U.S. ENVIRONMENTAL PROTECTION AGENCY Certified to comply with 2020 particulate emission standards using crib wood." Tested & listed to Method 28R, E2780 - 10, E2515 - 11. Model Regency i3000A/i3000R 0.95 g/hr.

"This manual describes the installation and operation of the Regency i3000A/i3000R wood heater. This heater meets the 2020 U.S. Environmental Protection Agency's cord wood emission limits for wood heaters. Under specific test conditions, this heater has been shown to deliver heat at rates ranging from 13,794 Btu/hr to 33,155 Btu/hr." Efficiency is determined using the B415 method, resulting in lower and higher heat values. This heater generates the best efficiency when operated using well-seasoned wood and installed in the main living areas where the majority of the chimney is within the building envelope. "

It is against federal regulation to operate this wood heater in a manner inconsistent with the operating instructions in this manual, or if elements are deactivated or removed."

"This heater is designed to burn natural wood only. Higher efficiencies and lower emissions generally result when burning air-dried, seasoned hardwoods, as compared to softwoods or to green or freshly cut hardwoods."

CAUTION
- **Burn untreated wood only. Other materials such as wood preservatives, metal foils, coal, plastic,garbage, sulphur, or oil may damage the heater.**

DO NOT BURN:

- Treated wood
- Coal
- Garbage
- Cardboard
- Solvents
- Colored Paper
- Bio Bricks
- Trash
- **Lawn clippings or yard waste**
- **Materials containing rubber including tires**
- **Materials containing plastic**
- **Waste petroleum products , paints or paint thinners or asphalt products**
- **Materials containing asbestos**
- **Construction or demolition debris**
- **Railroad ties**
- **Manure or animal remains**
- **Saltwater driftwood or other previously salt water saturated materials**
- **Unseasoned wood**
- **Paper products, cardboard, plywood, or particle board. The prohibition against burning these materials does not prohibit the use of fire starters made from paper, cardboard, saw dust, wax and similar substances for the purpose of starting a fire in a wood heater.**

Burning these materials may result in release of toxic fumes or render the heater ineffective and cause smoke.

The authority having jurisdiction (such as Municipal Building Department, Fire Department, Fire Prevention Bureau, etc.) should be consulted before installation to determine the need to obtain a permit.

ULC628-2022 - Canada
This fireplace insert must be installed with a continuous chimney liner liner of 5.5 or 6 inch diameter extending from the fireplace insert to the top of the chimney. The chimney liner must conform to the class 3 requirements of CAN/ULS-S635 Standard for lining systems for existing Masonry or factory built chimneys and vents or to the requirements of CAN/ULC-S640, Standard for lining systems for new masonry chimneys.
UL1482-2022 - U.S.A
A chimney complying with the requirement for type HT chimneys in the standard for chimneys,factory built residential and building heating appliance UL103 or a code approved masonry chimney liner with a flue liner.
This fireplace insert must be installed with a continuous chimney liner liner of 5.5 or 6 inch diameter extending from the fireplace insert to the top of the chimney. When this room heater is not properly installed, a house fire may result. To reduce the risk of fire follow the installation instructions. Contact local building or fire official as about restrictions and installation requirements in your area.

i3000A/i3000R is tested and certified to CAN/ULC 628:2022 and UL 1482-2022.

SAVE THESE INSTRUCTIONS

NATIONAL FIREPLACE INSTITUTE NFI CERTIFIED www.nficertified.org
We recommend that our products be installed and serviced by professionals who are certified in the U.S. by the National Fireplace Institute® (NFI) or in Canada by Wood Energy Technical Training (WETT).
Wood Energy Technical Training www.wett.ca

CAUTION
To avoid burns or wood splinters, when opening/closing the fuel door or adding wood to the fire, You should always wear appropriate protective gloves to protect your hands from the heat being emitted from this fireplace.

WARNING: Cancer and Reproductive Harm
www.P65Warnings.ca.gov
919-874

Safety Label for i3000A/i3000R 4

Dimensions

Contemporary Faceplate Options 5
Classic & Arched Faceplate Options..... 6
Faceplate with Traditional Extrusion and Premium Surround Option... 7
Oversize Faceplate Options 8
Cast Faceplate Options 9

Installation

Masonry Fireplace Clearances 10
How To Determine If Alternate Floor Protection Materials Are Acceptable..... 11
Installation into a Masonry Fireplace..... 11
Before Installing Your Insert..... 11
Chimney Specifications 11
Draft 11
Refacing of i3000A/i3000R Using Steel Studs and Concrete Board Over Masonry Fireplace Front Only 12
Installing Your Unit..... 13
Catalytic Combustor Monitor 14
Catalytic Combustor Digital Disply Monitor - Optional Accessory..... 15
Faceplate Installation..... 16
Cast Faceplate Installation 17
Fan Installation 18
Fan Installation - Optional Hardwire Kit..... 19
Fan Installation When Using Cast Faceplate..... 21
Fan Operation 22
Floor Protection..... 23
Levelling Bolt Installation 23
Brick Panel Installation 24
Seasoned Wood 25

Operation

Operating Instructions..... 26
Draft Control..... 26
First Fire..... 26
Ash Disposal 27
Fan Operation 27
Creosote..... 27
Removal for Cleaning..... 27
Ways to Prevent and Keep Unit Free of Creosote 27
Wood Storage 27
Safety Guidelines and Warnings..... 27
Troubleshooting Guide..... 28
Catalytic Combustor (Part #166-571)..... 29
Combustor Assembly Removal / Replacement..... 30

Maintenance

Bypass Door Gasket Replacement..... 31
Glass Cleaning 32
Glass Replacement 32
Door Removal 32
Glass Removal..... 33
Maintenance 33
Annual Maintenance 34
Secondary Air Tube Removal / Installation..... 35
Cast Bypass Top Plate Removal / Installation..... 36
Fan Operation Into Auto Mode 36
Sweeping the Flue From the Top Down..... 37
Door Gasket..... 38
Glass Cleaning 38
Handle Replacement..... 38
Door Latch Maintenance 38
Glass Removal..... 39
Door Adjustment..... 40

Parts

Main Assembly & Options - i3000A/i3000R 41
Brick Panels (Part #166-960) 42
Faceplates and Surrounds..... 43
Hampton Faceplate 44

Warranty 46

ALL PICTURES / DIAGRAMS SHOWN THROUGHOUT THIS MANUAL ARE FOR ILLUSTRATION PURPOSES ONLY. ACTUAL PRODUCT MAY VARY DUE TO PRODUCT ENHANCEMENTS.

Safety Label for i3000A/i3000R

This is a copy of the label that accompanies your **Regency Insert**. We have printed a copy of the contents here for your review.

NOTE Regency units are constantly improved. Check the label on the unit and if there is a difference, the label on the unit is the correct one.

Tested and listed to:

0219WN032S

LISTED MASONRY FIREPLACE INSERT
CERTIFIED FOR USE IN CANADA AND U.S.A./HOMOLOGUÉ POUR UNE UTILISATION AU CANADA ET AUX ÉTATS-UNIS
MODEL/MODÈLE : I3000A/I3000R
CERTIFIED TO /HOMOLOGUÉ : CAN/ULC 628:2022 / UL-1482-2022
PFS PROJECT #23-229

DO NOT REMOVE THIS LABEL
NE PAS RETIRER CETTE ÉTIQUETTE

REGENCY FIREPLACE PRODUCTS

U.S. ENVIRONMENTAL PROTECTION AGENCY CERTIFIED TO COMPLY WITH 2020 PARTICULATE EMISSION STANDARDS USING CRIB WOOD." TESTED TO METHOD 28R, E2780-10, E2515-11. MODEL REGENCY I3000 0.95 G /HR. THIS WOOD HEATER NEEDS PERIODIC INSPECTION AND REPAIR FOR PROPER OPERATION. CONSULT THE OWNER'S MANUAL FOR FURTHER INFORMATION. IT IS AGAINST FEDERAL REGULATIONS TO OPERATE THIS WOOD HEATER IN A MANNER INCONSISTENT WITH THE OPERATING INSTRUCTIONS IN THE OWNER'S MANUAL. **COMPONENTS REQUIRED FOR INSTALLATION: 5.5" (140mm) or 6" (152mm) STAINLESS STEEL LINER.**
CERTIFIÉ CONFORME AUX NORMES 2020 DU U.S. ENVIRONMENTAL PROTECTION AGENCY EN MATIÈRE D'ÉMISSION DE PARTICULES DE BOIS AVEC DU BOIS D'ESSAI NORMALISÉ (CRIB WOOD). HOMOLOGUÉ SELON LA MÉTHODE 28R, E2780-10, E2515-11. MODÈLE REGENCY I3000 0.95 G /H. CET APPAREIL DE CHAUFFAGE AU BOIS DOIT ÊTRE INSPECTÉ PÉRIODIQUEMENT ET RÉPARÉ POUR FONCTIONNER CORRECTEMENT. CONSULTER LE MANUEL D'INSTALLATION POUR PLUS D'INFORMATION. LA RÉGLEMENTATION FÉDÉRALE INTERDIT DE FAIRE FONCTIONNER UN TEL APPAREIL SI LES CONSIGNES D'UTILISATION CONTENUES DANS LE PRÉSENT MANUEL NE SONT PAS RESPECTÉES.
PIÈCES REQUISES POUR L'INSTALLATION : DOUBLURE EN ACIER INOXYDABLE DE 5,5 PO (140 mm) OU 6 PO (152 mm).

INSTALL AND USE ONLY IN ACCORDANCE WITH THE MANUFACTURER'S INSTALLATION AND OPERATING INSTRUCTIONS. INSTALL AND USE ONLY IN MASONRY FIREPLACE. NOT TO BE INSTALLED IN ANY FACTORY-BUILT FIREPLACE. CONTACT LOCAL BUILDING OR FIRE OFFICIALS ABOUT RESTRICTIONS AND INSTALLATION INSPECTION IN YOUR AREA.
INSTALLER ET UTILISER SELON LES INSTRUCTIONS DU FABRICANT. INSTALLER ET UTILISER DANS UN FOYER DE MAÇONNERIE SEULEMENT. NE PAS INSTALLER DANS UNE CHEMINÉE PRÉFABRIQUÉE. APPERLER UN INSPECTEUR EN BÂTIMENT OU LE DÉPARTEMENT INCENDIE LOCAL POUR CONNAÎTRE LES RESTRICTIONS ET LES CONDITIONS D'INSPECTION À L'INSTALLATION DANS VOTRE SECTEUR.

FLOOR THERMAL INSULATION/PROTECTION WITH A R VALUE OF 2.8 IS REQUIRED IF THE UNIT IS RAISED TO 6" (152 MM) (MEASURED FROM THE BOTTOM OF THE APPLIANCE).
THERMAL FLOOR PROTECTION IS NOT REQUIRED WHEN UNIT IS RAISER GREATER THAN 6" (152 MM) (MEASURED FROM THE BOTTOM OF THE APPLIANCE).
INSTALLER OBLIGATOIREMENT UNE ISOLATION/PROTECTION THERMIQUE D'UNE VALEUR R DE 2,8 SI L'APPAREIL EST INSTALLÉ À UNE DISTANCE INFÉRIEURE À 6 PO (152 MM) DU SOCLE (MESURE PRISE À PARTIR DU BAS DE L'APPAREIL).
LA PROTECTION THERMIQUE N'EST PAS REQUISE SI L'APPAREIL SE TROUVE À PLUS DE 6 PO (152 MM) DU SOCLE (MESURE PRISE À PARTIR DU BAS DE L'APPAREIL).

920-723

MINIMUM CLEARANCES TO COMBUSTIBLE MATERIALS (MEASURED FROM INSERT DOOR)

ADJACENT SIDEWALL MANTEL
A)15-1/2 in / 394 mm
B)15 in / 381 mm
(3"/76 mm MANTEL)
B)20-1/2 in / 521 mm
(12 in/305 mm MANTEL)
TOP FACING C)13-3/4 in / 349 mm
SIDE FACING D)11-3/4 in / 298 mm

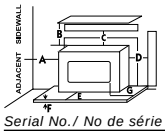

Serial No./ No de série
600

OPTIONAL COMPONENT: FAN (166-917), ELECTRICAL RATING: VOLTS 115, 60 HZ, 0.6 AMPS
DANGER: RISK OF ELECTRIC SHOCK. DISCONNECT POWER BEFORE SERVICING UNIT. DO NOT ROUTE POWER CORD UNDER OR IN FRONT OF APPLIANCE. DO NOT CONNECT THIS UNIT TO A CHIMNEY FLUE SERVICING ANOTHER APPLIANCE. DO NOT REMOVE BRICKS OR MORTAR IN MASONRY FIREPLACE. FOR USE WITH SOLID WOOD FUEL ONLY. DO NOT USE GRATE OR ELEVATE FIRE. BUILD WOOD FIRE DIRECTLY ON HEARTH. RISK OF SMOKE AND FLAME SPILLAGE, OPERATE ONLY WITH DOORS FULLY OPEN OR FULLY CLOSED. OPEN FEED DOOR TO FEED FIRE ONLY. REPLACE GLASS ONLY WITH CERAMIC GLASS (5MM). INSPECT AND CLEAN CHIMNEY FREQUENTLY. UNDER CERTAIN CONDITIONS OF USE CREOSOTE BUILDUP MAY OCCUR RAPIDLY. DO NOT OVERFIRE, IF INSERT GLOWS YOU ARE OVER-FIRING. CATALYTIC COMBUSTOR PART#166-543.
PIÈCE FACULTATIVE : VENTILATEUR (166-917); PUISSANCE ÉLECTRIQUE : 115 VOLTS, 60 HZ, 0,6 A
DANGER : RISQUE D'ÉLECTROCUTION. DÉBRANCHER L'APPAREIL AVANT TOUTE RÉPARATION. NE PAS FAIRE PASSER LE FIL ÉLECTRIQUE DEVANT L'APPAREIL NI EN DESSOUS. NE PAS RELIER CET APPAREIL À UNE CHEMINÉE DESTINÉE À L'ÉVACUATION D'UN AUTRE APPAREIL. NE PAS ENLEVER DE BRIQUES NI DE MORTIER D'UNE CHEMINÉE DE MAÇONNERIE. N'UTILISER QUE DU COMBUSTIBLE DE BOIS SOLIDE. NE PAS SURÉLEVER LES BÛCHES NI LES PLACER SUR DES GRILLES, MAIS LES DÉPOSER DIRECTEMENT SUR L'ÂTRE. RISQUE DE DÉGAGEMENT DE FUMÉE OU DE FLAMMES : TOUJOURS GARDER LES PORTES COMPLÈTEMENT OUVERTES OU FERMÉES LORSQUE L'APPAREIL FONCTIONNE. OUVRIR LA PORTE UNIQUEMENT POUR ALIMENTER LE FEU. SI LES PORTES DU POÊLE RESTENT OUVERTES, TOUJOURS UTILISER LE PARE-ÉTINCELLES FOURNI PAR LE FABRICANT. REMPLACER LA VITRE UNIQUEMENT PAR UNE VITRE EN VITROCÉRAMIQUE (5 MM). INSPECTER ET NETTOYER FRÉQUEMMENT LA CHEMINÉE. SELON LE TYPE D'USAGE, DE LA CRÉOSOTE PEUT S'ACCUMULER RAPIDEMENT. NE PAS SURCHAUFFER; SI L'ENCASTRABLE SE MET À ROUGIR, IL SURCHAUFFE. CATALYSEUR DE POSTCOMBUSTION PIÈCE N°166-543

CAUTION / ATTENTION

HOT WHILE IN OPERATION DO NOT TOUCH. KEEP CHILDREN, CLOTHING AND FURNITURE AWAY. CONTACT MAY CAUSE SKIN BURNS. READ ABOVE INSTRUCTIONS.

SURFACES CHAUDES LORS DE FONCTIONNEMENT. NEPASTOUCHER.ÉLOIGNERLESENFANTS,LESVÊTEMENTSET LES MEUBLES. TOUT CONTACT AVEC LA PEAU PEUT OCCASIONNER DES BRÛLURES. LIRE LES CONSIGNES DE CET APPAREIL.

Manufactured By:
FIREPLACE PRODUCTS INTERNATIONAL LTD.
6988 VENTURE ST., DELTA, BC V4G 1H4
920-723
MADE IN CANADA

DATE OF MANUFACTURE

Jan Feb Mar Apr May June
2024
2025
2026
2027
2028
July Aug Sept Oct Nov Dec

(Duplicate Serial #) 600

Location of Safety Label

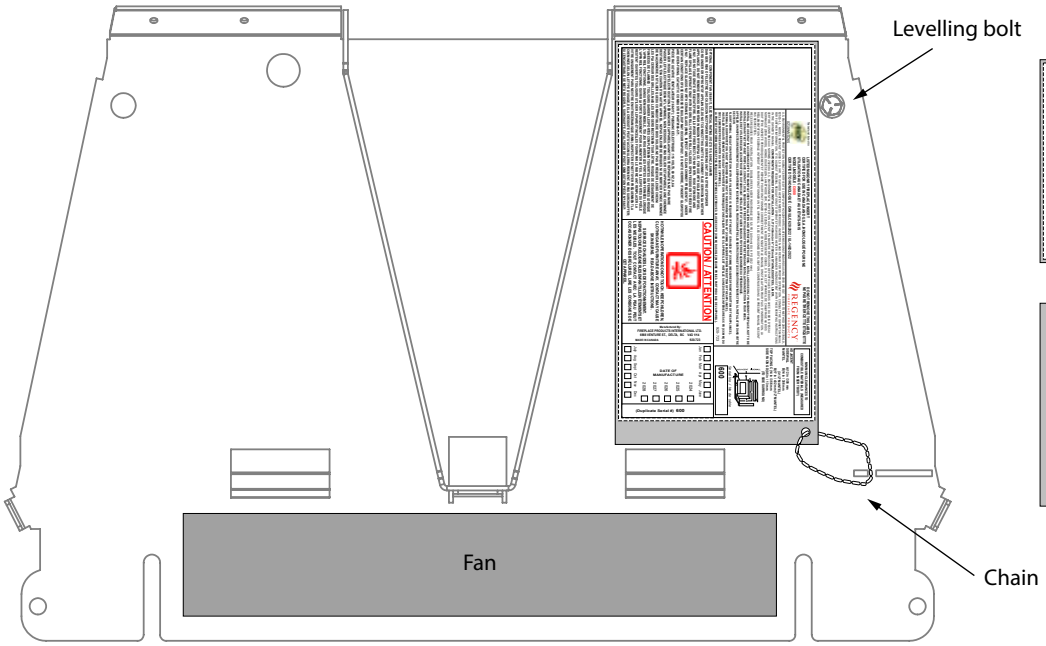

Top view

12.26 x 6.17″

Sheet metal

Contemporary Faceplate Option

Top View

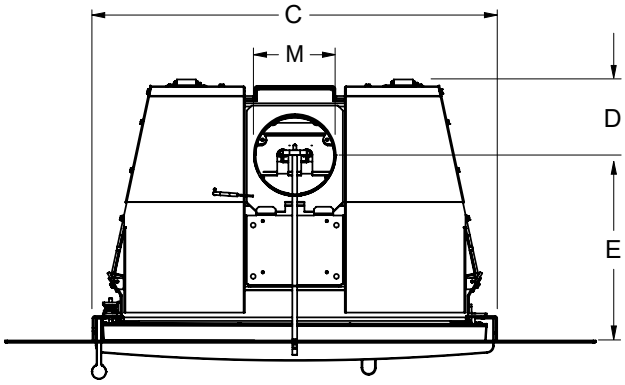

Front View

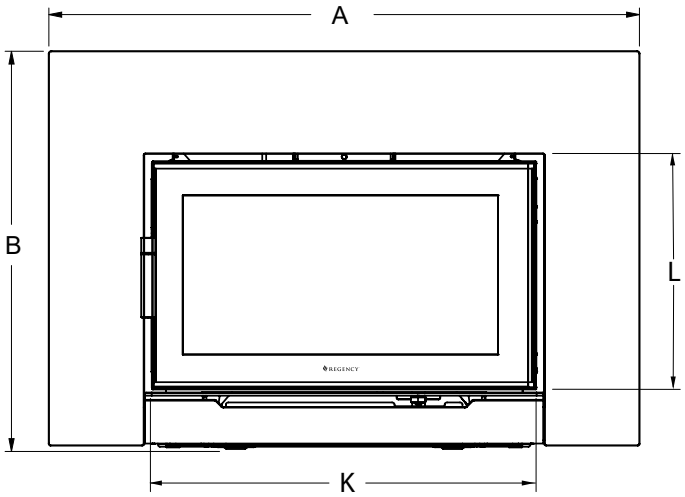

Side View

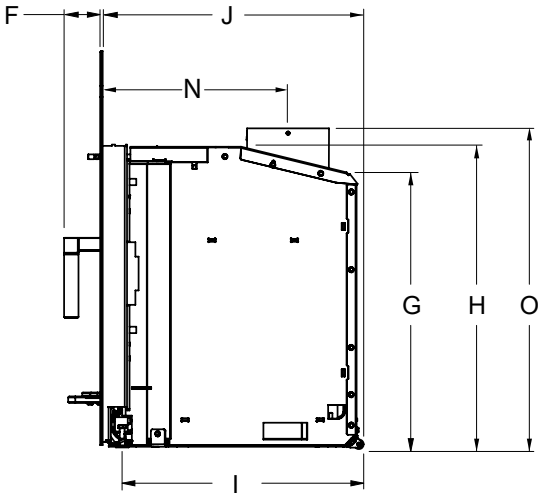

A	45-3/4" (1162 mm)
B	31" (787 mm)
C	31-5/8" (803 mm)
D	5-13/16" (147 mm)
E	14-9/16" (370 mm)
F	2-5/16" (59 mm)
G	21-5/8" (549 mm)
H	23-13/16" (605 mm)

I	18-7/8" (479 mm)
J	20-3/8" (517 mm)
K	30" (762 mm)
L	17-13/16" (452 mm)
M	6" (152 mm)
N	14-9/16" (370 mm)
O	25" (635 mm)

Classic & Arched Faceplate Options

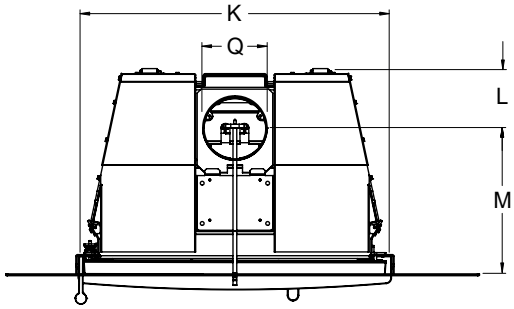

Classic

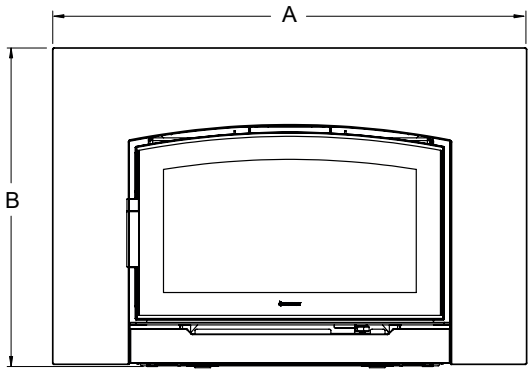

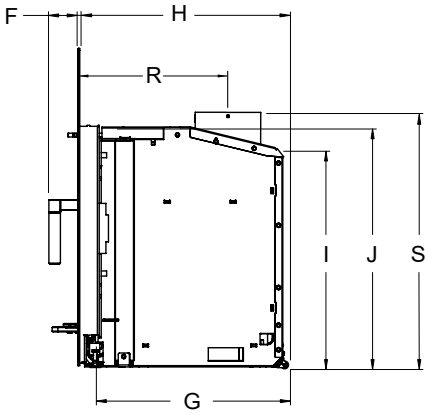

Arched

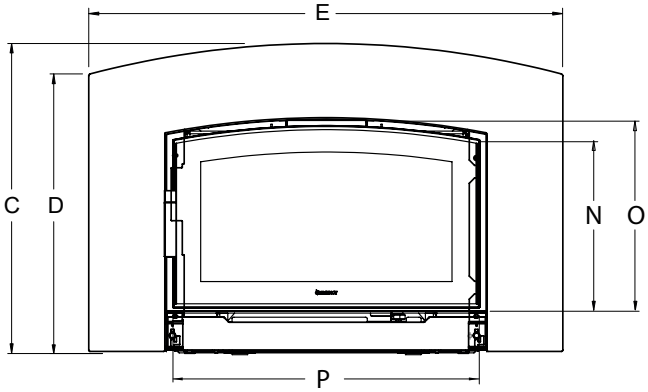

A	46-1/8" (1172 mm)
B	31" (787 mm)
C	31" (787 mm)
D	28" (711 mm)
E	46-1/8" (1172 mm)
F	2-15/16" (74 mm)
G	18-7/8" (479 mm)
H	20-3/8" (518 mm)
I	21-5/8" (549 mm)

J	23-13/16" (604 mm)
K	31-5/8" (803 mm)
L	5-13/16" (147 mm)
M	14-9/16" (370 mm)
N	17" (432 mm)
O	18-7/16" (468 mm)
P	30" (762 mm)
Q	6" (152 mm)
R	14-9/16" (370 mm)
S	25" (635 mm)

Faceplate with Traditional Extrusion and Premium Surround Option

Faceplate with Traditional Extrusion Option

Front View

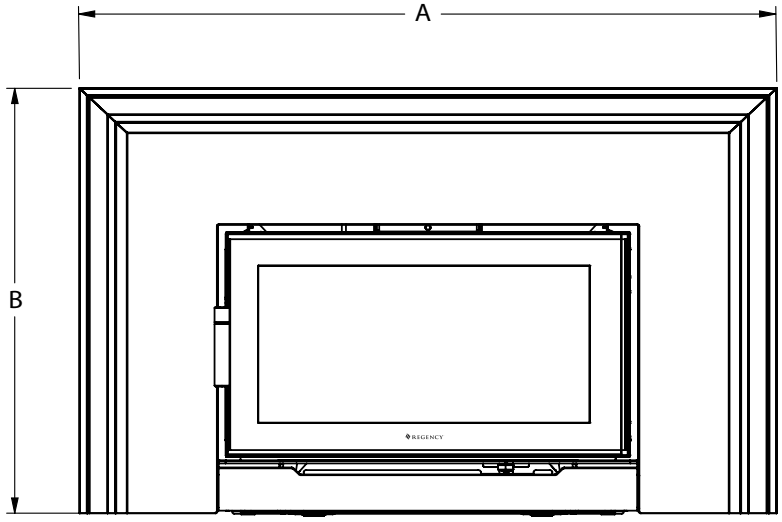

Side View

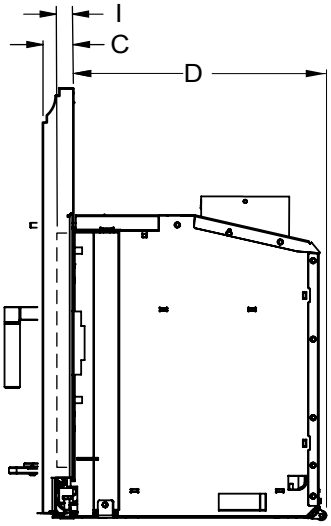

*Allows unit to fit into a 32" wide and 19" deep opening.

Faceplate with Premium Surround Option

Front View

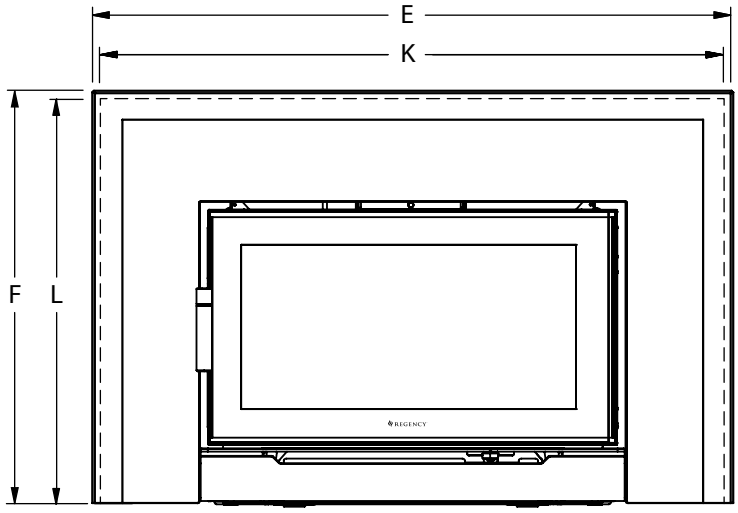

Side View

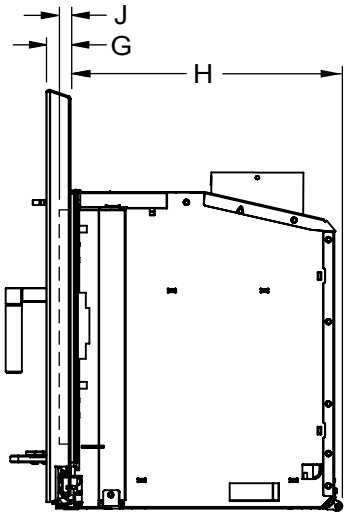

*Allows unit to fit into a 32" wide and 19.5" deep opening.

A	51-3/4" (1314 mm)
B	33-7/8" (860 mm)
C	2-1/4" (57 mm)
D	18-1/2" (470 mm)

E	46-3/4" (1187 mm)
F	31-1/8" (790 mm)
G	1-3/4" (45 mm)
H	19" (483 mm)

I**	2.0" (51 mm)
J**	1-1/2" (38 mm)
K	44-3/4" (1136 mm)
L	30-1/4" (768 mm)

NOTE: These can only be installed on Contemporary or Classic Faceplates

**The dotted lines refer to fuel door opening from back of traditional extrusion/premium surround.

Oversize Faceplate Options

Contemporary

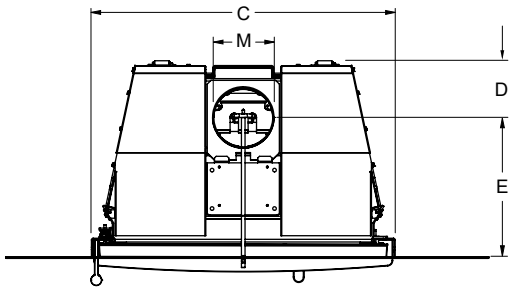

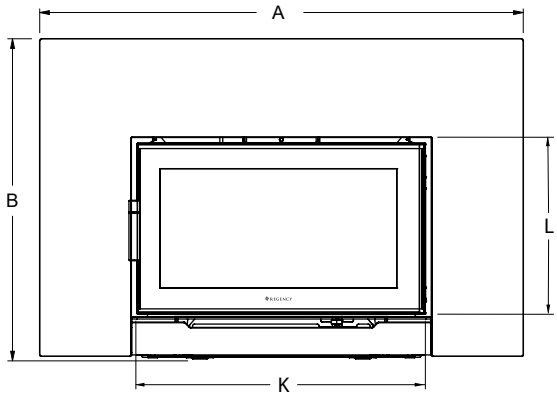

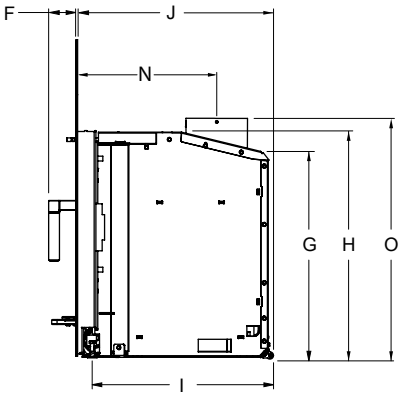

A	50-1/4" (1276 mm)
B	33-1/4" (845 mm)
C	31-5/8" (803 mm)
D	5-13/16" (147 mm)
E	14-9/16" (370 mm)
F	2-5/16" (59 mm)
G	21-5/8" (549 mm)
H	23-13/16" (605 mm)
I	18-7/8" (479 mm)
J	20-3/8" (517 mm)
K	30" (762 mm)
L	17-13/16" (452 mm)
M	6" (152 mm)
N	14-9/16" (370 mm)
O	25" (635 mm)

Classic

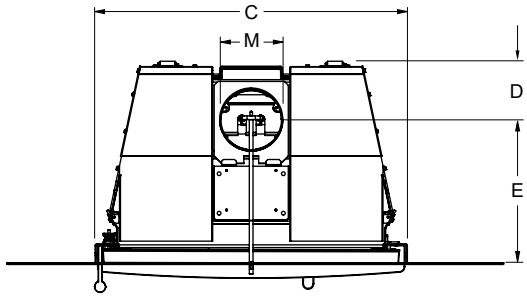

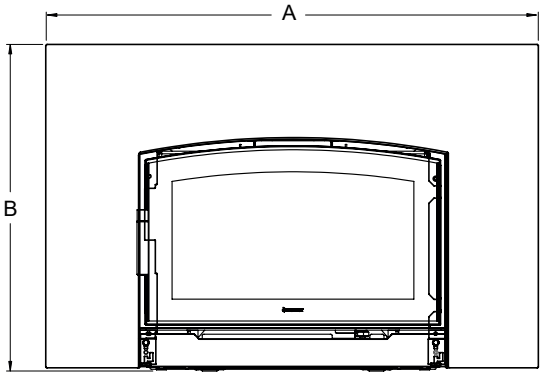

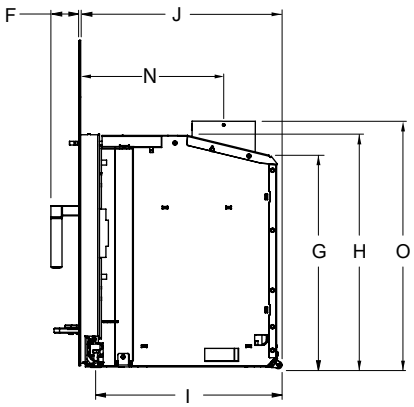

Cast Faceplate Options

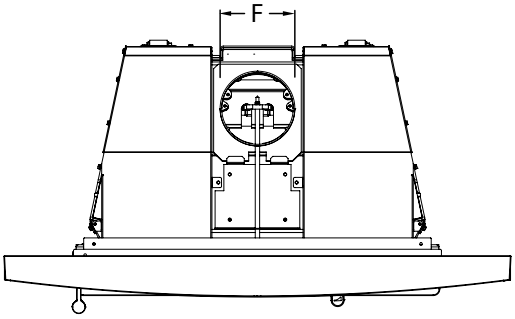

Cast Faceplate Front View

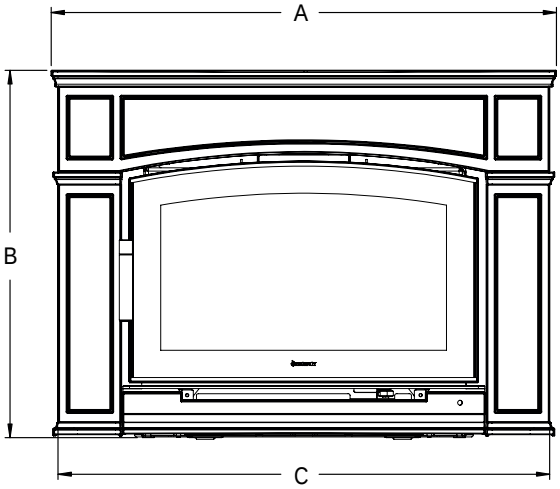

Cast Faceplate Side View

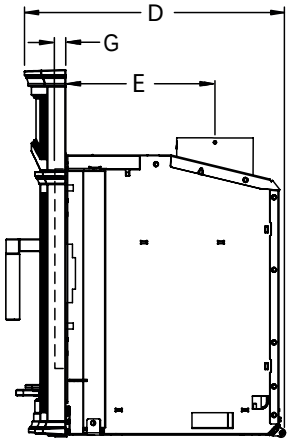

A	43-7/16" (1103 mm)
B	30-7/16" (773 mm)
C	42-1/4" (1073 mm)
D	21-15/16" (557 mm)
E	12-5/8" (321 mm)
F	6" (152 mm)
G**	2" (51 mm)

**The dotted lines refer to fuel door opening from back of cast surround.

Masonry Fireplace Clearances

The minimum required clearances to combustible materials when installed into a masonry fireplace are listed below.

ITEM	MEASUREMENT	DESCRIPTION
A	15-1/2" (394 mm)	Adjacent side wall to side of door
B	15" (381 mm) for 3-1/2" (89mm) mantel 20" (508 mm) for 12" (305mm) mantel	Mantel** to top of Door
C	13-3/4" (349 mm)	Top facing to top of Door*
D	11-3/4" (298 mm)	Side facing to side of Door*
E	16" (406 mm) USA	Minimum hearth extension***
	18" (457 mm) Canada	
F	8" (203 mm)	Minimum hearth side extension***
G	23-1/2" (597 mm)	To top of Door (Reference Dimension Only)
H	30" (762 mm)	From Side of Door (Reference Dimension Only)

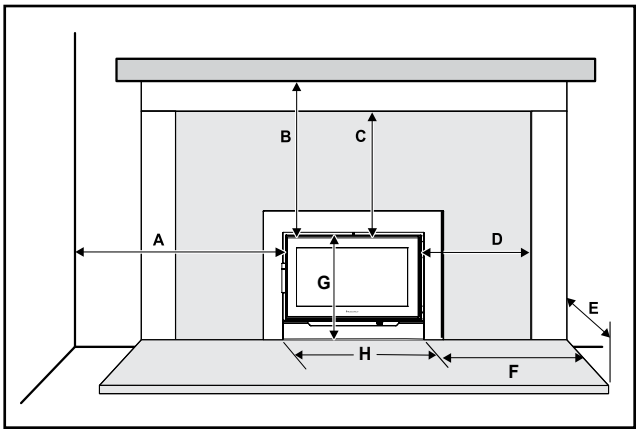

Clearance diagram for installations

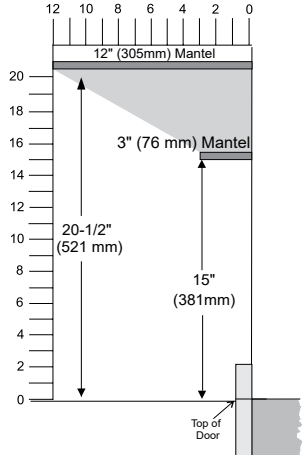

Note: Shown with rectangular door. Arch door clearances are exactly the same.

*****Both Canada/USA:**
Minimum Hearth Extension for the front (E) is measured from the fuel door opening.
(F) measurement (minimum hearth side extension) is taken from the side of the door.

**The mantel can be installed anywhere in the shaded area or higher, using the above scale.

NOTES

- *If there is only a top facing (C) and no side facing (D), refer to (B) mantle (to top of unit) clearance requirements. Side facing (D) and top facing (C) is 1-1/2" (38 mm) thick, maximum.
- Ensure the paint that is used on the mantel and the facing is heat resistant, or the paint may discolour.

Floor Protection

Floor thermal insulation/protection with an R value of 2.8 is required if the unit is raised 0 to 6" (152 mm) measured from the bottom of the appliance.

Thermal floor protection is not required when unit is raiser greater than 6" (152 mm) measured from the bottom of the appliance.

However ember protection is still required. Non-combustible material such as brick, tile, concrete board, etc. or certified to UL-1618 Type 1 or as defined by local codes. Type 1 Hearth pad extensions typically provide protection from embers only, but won't provide thermal protection from the heat of the appliance.

ADD HEARTH PROTECTION R FACTOR AFTER TESTING

Please check to ensure that your floor protection and hearth will meet the standards for clearance to combustibles. Your hearth extension must be made from a non-combustible material extending 16" (406 mm) for US and 18" (457 mm) for Canada—measured from the fuel loading door.

Wood Insert Specifications

Your fireplace opening requires the following minimum sizes:

Dimensions	Contemporary/Classic/ Arched Faceplates	Classic/Contemporary Faceplate with Traditional Extrusion	Classic/Contemporary Faceplate with Premium Surround	Cast Faceplate
Height	24" (610 mm)	24" (610 mm)	24" (610 mm)	24" (610 mm)
Width	32" (813 mm)	32" (813 mm)	32" (813 mm)	32" (813 mm)
Depth	21" (533 mm)	19" (483 mm)	19-1/2" (496 mm)	19" (483 mm)

Model # Reference
i3000A = Wood Fireplace Insert with Arched Door
i3000R = Wood Fireplace Insert with Rectangular Door

How To Determine If Alternate Floor Protection Materials Are Acceptable

The specified floor protector should be 3/8" (18mm) thick material with a K - factor of 0.84.

The proposed alternative is 4" (100mm) brick with a C-factor of 1.25 over 1/8" (3mm) mineral board with a K-factor of 0.29.

Step (a):
Use formula above to convert specification to R-value.
R = 1/k x T = 1/0.84 x .75 = 0.893.

Step (b):
Calculate R of proposed system.
4" brick of C = 1.25, therefore
Rbrick = 1/C = 1/1.25 = 0.80
1/8" mineral board of k = 0.29, therefore
Rmin.bd. = 1/0.29 x 0.125 = 0.431
Total R = Rbrick + Rmineral board =
0.8 + 0.431 = 1.231.

Step (c):
Compare proposed system R of 1.231 to specified R of 0.893. Since proposed system R is greater than required, the system is acceptable.

DEFINITIONS

Thermal Conductance:

$$C = \frac{Btu}{(hr)(ft^2)(^oF)} = \frac{W}{(m^2)(K)}$$

Thermal Conductivity:

$$k = \frac{(Btu)(inch)}{(hr)(ft^3)(^oF)} = \frac{W}{(m)(K)} = \frac{Btu}{(hr)(ft)(^oF)}$$

Thermal Resistance:

$$R = \frac{(ft^2)(hr)(^oF)}{Btu} = \frac{(m^2)(K)}{W}$$

Installation into a Masonry Fireplace

Regency Inserts are constructed with the highest quality materials and assembled under strict quality control procedures that ensure years of trouble-free, reliable performance. It is important that you read this manual thoroughly and fully understand safe installation and operating procedures. The more you understand the way your Regency Insert operates, the more enjoyment you will experience from knowing that your unit is operating at peak performance.

WARNING: The room heater shall not be installed in a factory-built fireplace.

Before Installing Your Insert

1. Please read this entire manual before you install and use your new wood insert. Failure to follow instructions may result in property damage, bodily injury, or even death. Install and use only in accordance with manufacturer's installation and operating instructions.
2. Check your local building codes - Building Inspection Department. You may need a permit before installing your insert. Be aware that local codes and regulations may override some items in the manual.
3. Notify your home insurance company that you plan to install a fireplace insert or hearth heater.
4. Your fireplace insert is heavy and requires two or more people to move it safely. The insert can be badly damaged by mishandling.

WARNING Careless installation is the major cause of safety hazard. Check all local building and safety codes before installation of unit.

5. If your existing fireplace damper control is inaccessible with your Regency Insert installed, you should either remove or secure it in the open position.
6. Inspect your fireplace and chimney prior to installing your insert to ensure it is free from cracks, loose mortar, or other signs of damage. If repairs are required, they should be completed before installing your insert. Do not remove bricks or mortar from your masonry fireplace.
7. Do not connect the insert to a chimney system servicing another appliance or an air distribution duct.

When referencing installation or connection to masonry fireplaces or chimneys, the masonry construction must be code compliant.

Chimney Specifications

Before installing, check and clean your chimney system thoroughly. If in doubt about its condition, seek professional advice. Your Regency Insert is designed for installation into a masonry fireplace that is constructed in accordance with the requirements of "The Standard for Chimneys, Fireplaces, Vents, and Solid Fuel Burning Appliance", N.F.P.A. 211, the National Building Code of Canada, or the applicable local code requirements.

The appliance, when installed, must be electrically grounded in accordance with local codes or, in the absence of local codes, with the National Electrical Code, ANSI/NFPA 70, or the Canadian Electrical code, CSA C22.1. Regency Inserts are designed to use either a 5-1/2" (140 mm) or 6" (152 mm) flue. This insert must be connected to a code-approved masonry chimney or listed factory-built fireplace chimney with a direct flue connector into the first chimney liner section. The chimney size should not be larger or smaller than three times greater than the cross-sectional area of the flue collar.

ULC628-2022 - Canada
This fireplace insert must be installed with a continuous chimney liner liner of 5.5 or 6 inch diameter extending from the fireplace insert to the top of the chimney. The chimney liner must conform to the class 3 requirements of CAN/ULS-S635 Standard for ling systems for existing Masonry or factory built chimneys and vents or to the requirements of CAN/ULC-S640, Standard for lining systems for new masonry chimneys.

UL1482-2022 - U.S.A
A chimney complying with the requirement for type HT chimneys in the standard for chimneys,factory built residential and building heating appliance UL103 or a code approved masonry chimney liner with a flue liner.
This fireplace insert must be installed with a continuous chimney liner liner of 5.5 or 6 inch diameter extending from the fireplace insert to the top of the chimney. When this room heater is not properly installed, a house fire may result. To reduce the risk of fire follow the installation instructions. Contact local building or fire official as about restrictions and installation requirements in your area.

Draft

Draft is the force which moves air from the appliance up through the chimney. The amount of draft in your chimney depends on the length of the chimney, local geography, nearby obstructions and other factors. Too much draft may cause excessive temperatures in the appliance, resulting in damage. An uncontrollable burn or excessive temperature indicates excessive draft. Inadequate draft may cause back puffing into the room and plugging of the chimney. Inadequate draft will cause the appliance to leak smoke into the room through appliance and chimney connector joints. Ensure the heater is installed in areas that are not too close to neighbors, or in valleys that would cause unhealthy air quality or nuisance conditions.

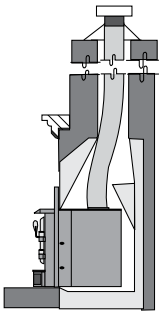

Recommended chimney height from top of flue collar:
Minimum 15 feet (4.6 meters)

Note: If the fireplace has been modified to accommodate a fireplace liner, the installer is to attach the metal tag to the fireplace using screws or nails, in a location readily visible should the fireplace insert be removed. A metal tag is supplied with this wood insert.

IMPORTANT:
Smoke and CO Detectors:
Make sure your home has a working smoke and CO detector, especially near any bedrooms. We recommend having a smoke and CO detector in the same room as the wood appliance for additional safety. Location of both detectors should be chosen wisely to avoid false alarms when reloading the appliance.

Fire Extinguisher:
A fire extinguisher should be installed in the home. The location of the fire extinguisher should be known by all family members.

Refacing of i3000A/i3000R Using Steel Studs and Concrete Board Over Masonry Fireplace Front Only

The front brick facing may be removed and replaced with non-combustible materials such as steel studs and concrete board/durarock/micor board, or other similar non combustible materials. The opening between the firebox and non-combustible materials must be sealed to ensure that heat from the wood insert cannot exit between the insert's face and the re-facing materials. Roxul insulation must be used to fill the void between the steel stud work, concrete board,durarock/micor board, or similar materials and brick face. Use finishing materials such as tile, stone, brick, or similar non combustible materials only. Use only non combustible materials that are uniform so that when the unit is positioned, there are no visible gaps on the sides and or top of the surround.

Non combustible material must run the full width and height of the masonry chimney. No portion of this addition may be constructed with combustible material. Steel studs must be anchored either to the masonry chimney structure and secured above at ceiling level and below on the hearth, or a finished floor depending on the hearth (flush or raised up).

NOTE Be aware that local codes and regulations may override some items in the manual.

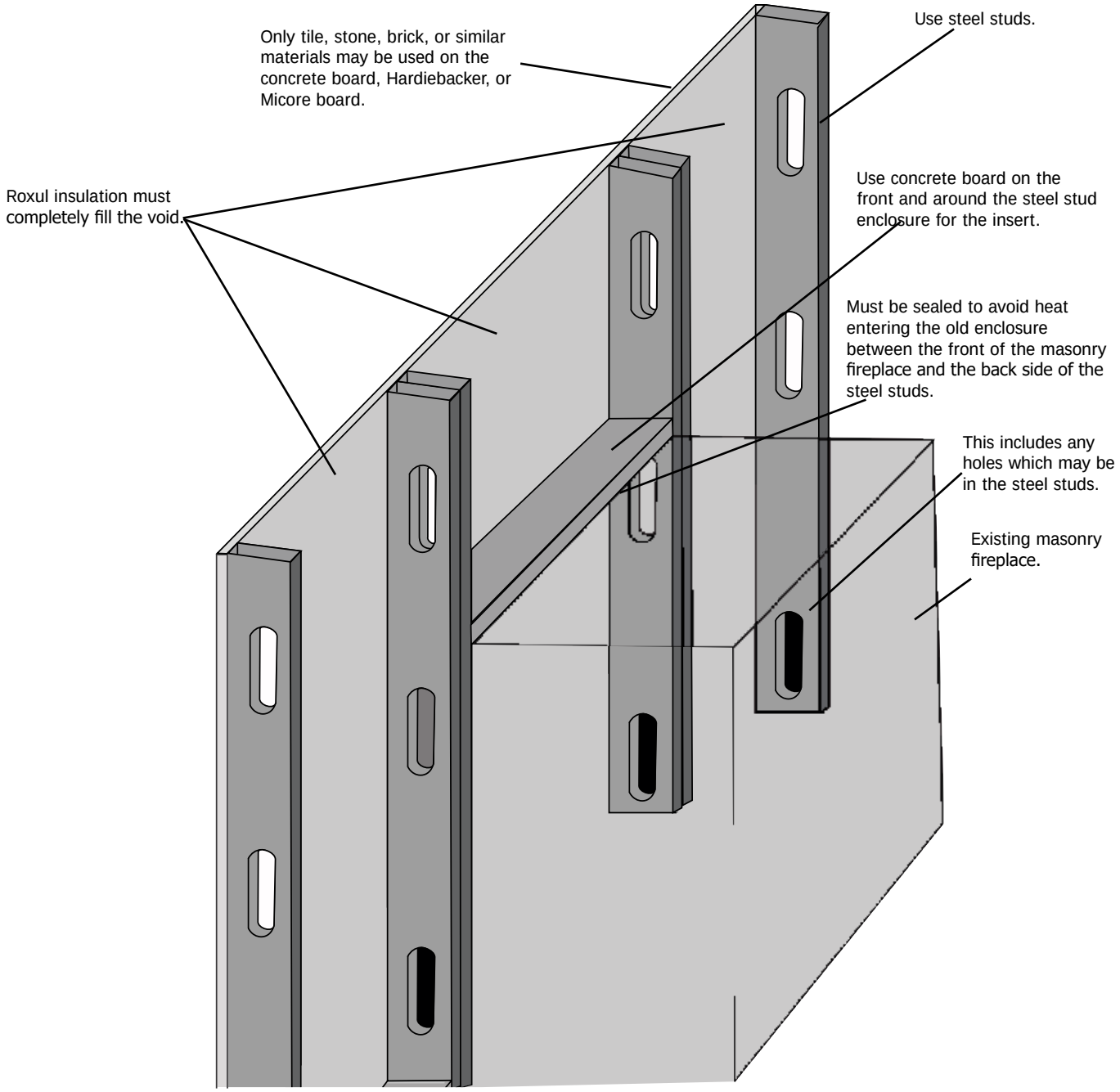

Installing Your Unit

Your insert is very heavy and will require two or three people to move it into position. The insert can be made lighter by opening the cast iron door and lifting it off its hinges. Be sure to protect your hearth extension with a heavy blanket or carpet scrap during the installation.

Evaluate the minimum cavity opening. If the cavity is high enough to install the insert without removing the flue collar, slide the unit into place, position the liner within the flue collar, and secure.

If the cavity is too small and the flue collar needs to be removed, please follow the steps below.

1. Remove the door, manual package, bricks, and C-Cast baffle packages from inside the unit.

2. From inside the firebox, remove the two 7/16" bolts holding the flue collar; using a socket with an extension is ideal. Slide the collar off the unit. See following 3 diagrams.

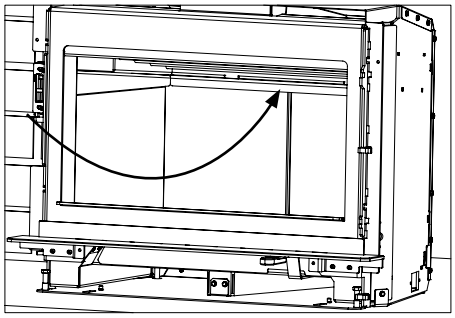

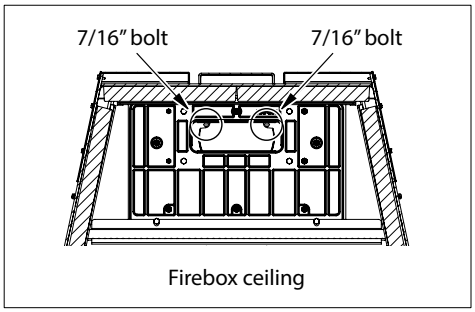

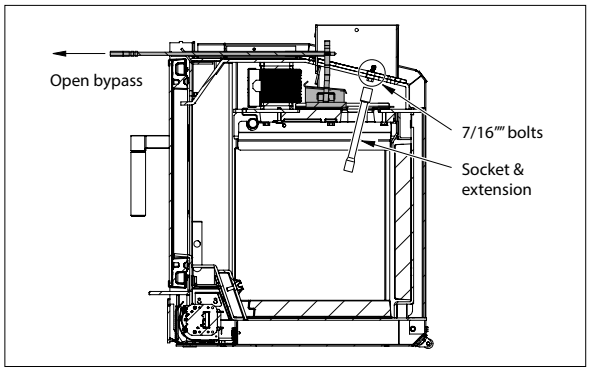

3. Install the stainless steel flex liner into the existing chimney per manufacturer's specifications.

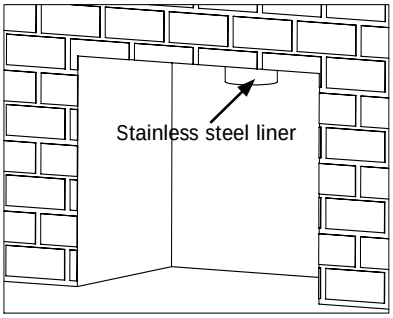

4. Install the flue collar removed in Step 2 onto the end of the flex liner. Secure the collar using 3 screws - 1 on the front, and 1 on the left and right sides.

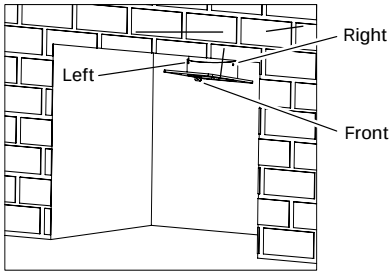

5. Start by setting the rear of the unit into the fireplace. Ensure that the unit is centered in the existing fireplace and lined up with the flue collar.

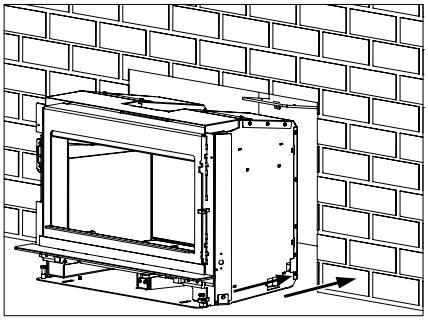

6. Once the unit is in its final position, install the flue collar by attaching the two 7/16" bolts that were removed in step 2.

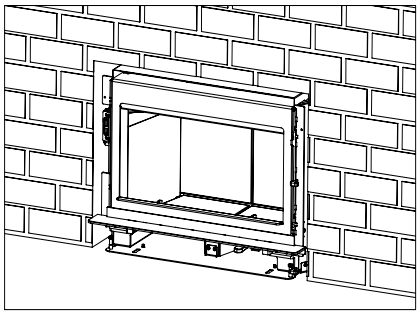

Catalytic Combustor Monitor Probe (Included)

The i3000A/i3000R is equipped with a provision to accept a catalytic temperature monitoring device. Please follow instructions below for the installation of the probe. Follow the user instructions of the catalytic monitoring device for product set up and details.

Important: The catalytic monitor probe which is supplied with this appliance must be installed prior to sliding the unit into final position in the masonry fireplace.

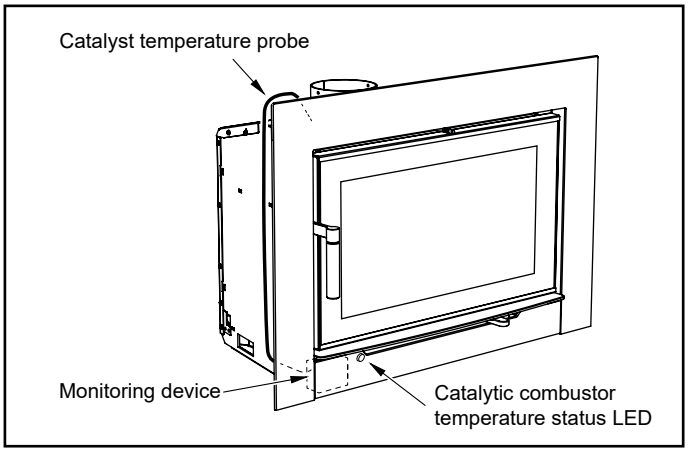

1. Remove two (2) bolts from the top of the unit to remove plate as shown below.

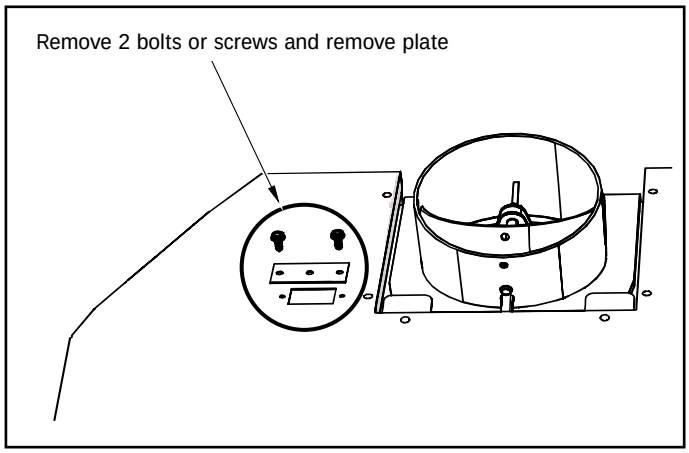

2. Locate the 7/16" bolt below the metal and remove.

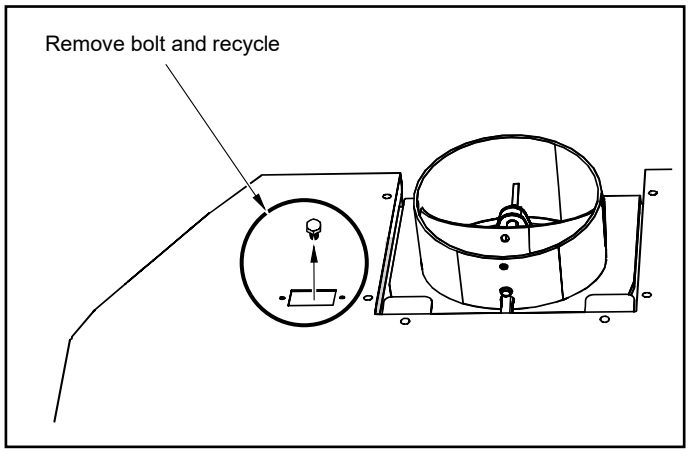

3. Reinstall & secure the plate removed in Step 1 and insert the temperature probe through the plate and into the hole created by removing the 7/16" bolt in Step 2.

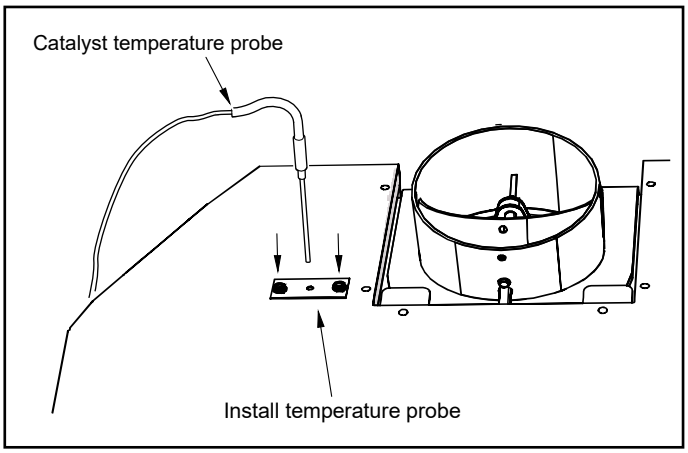

4. Complete the installation of the i3000. Ensure temperature probe wire is routed behind the faceplate and to the left side of the unit. Plug in the probe to the monitoring device.

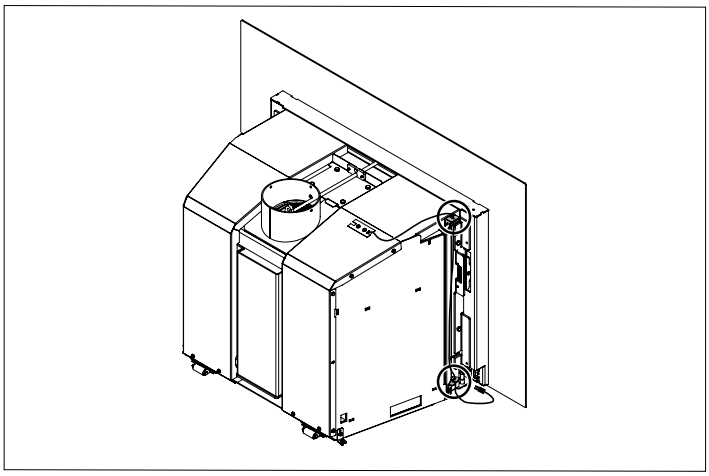

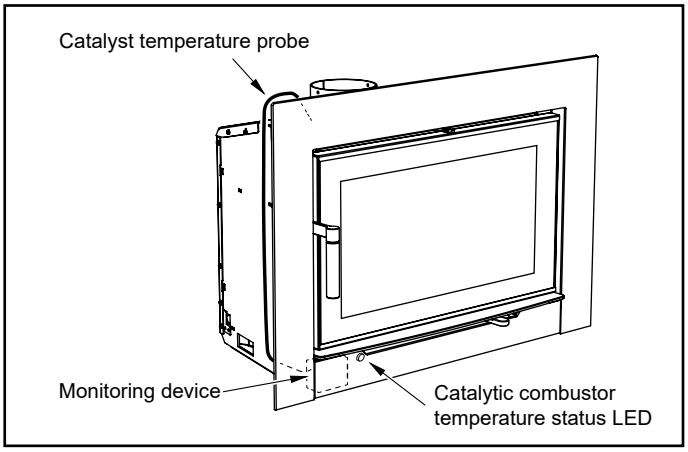

Catalytic Combustor Monitor Device (Included)

The i3000A/i3000R is equipped with a provision to accept a catalytic temperature monitoring device. Please follow instructions below for the installation of the monitoring device. Follow the user instructions of the catalytic monitoring device for product setup and details.

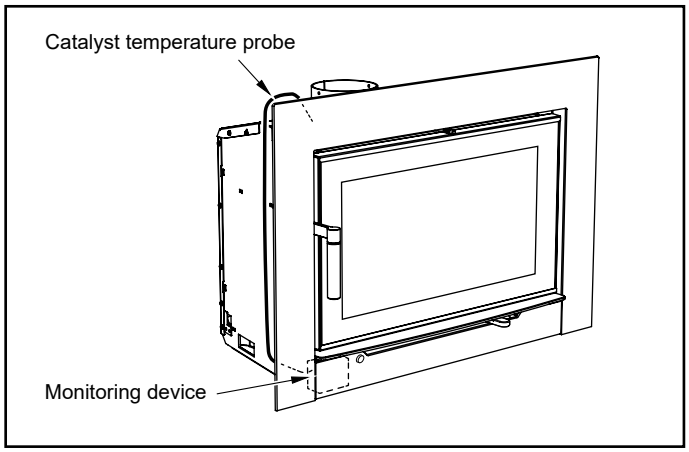

1. Ensure the catalyst temperature probe is installed on unit.
2. Locate the monitoring device located in the manual pack.

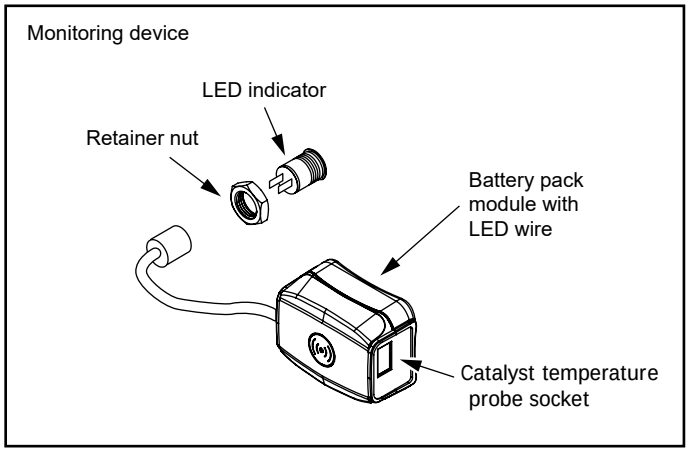

3. Install the LED indicator onto the fan cover by inserting through the fan cover and tightening the retainer nut.

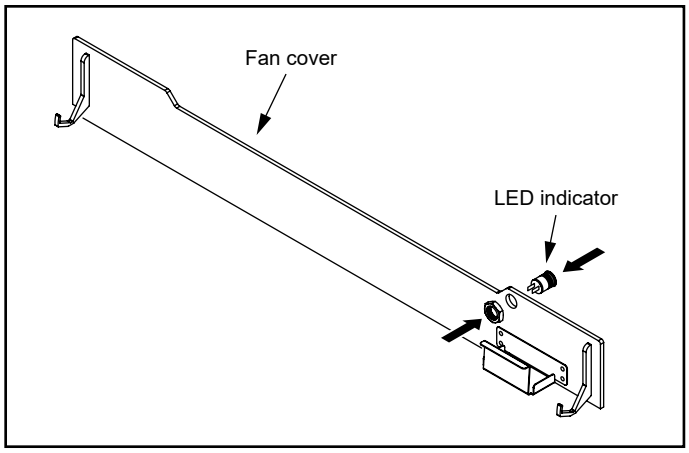

4. Install the battery pack module with LED wire into the module holder. The battery access door is towards the front and the catalyst temperature probe socket is closest to outside edge.

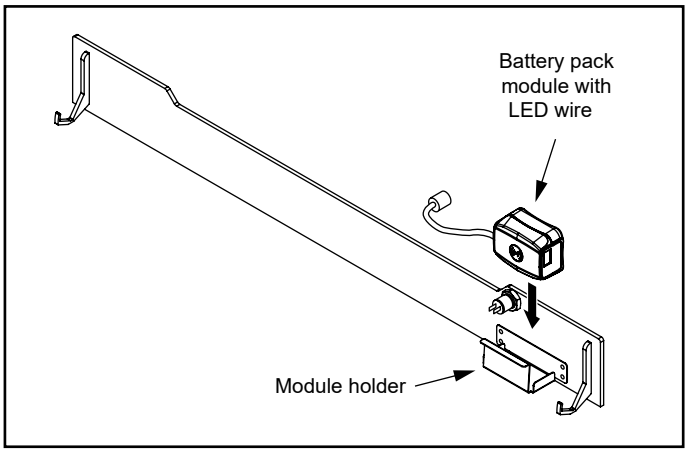

5. Install 3 AAA batteries accessible from the front in to the battery pack module.

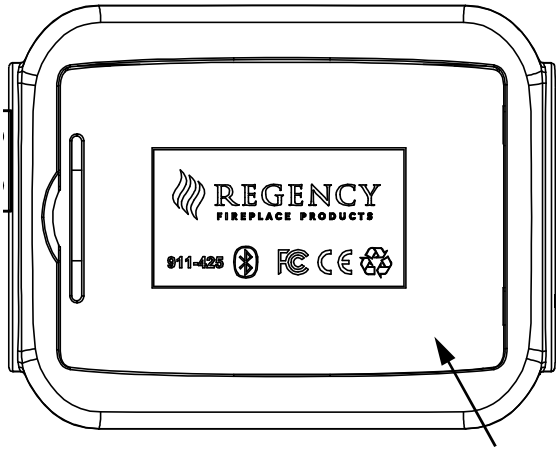

FRONT

3 x AA Batteries accessible from front

6. Attach the LED wire socket to the LED indicator.

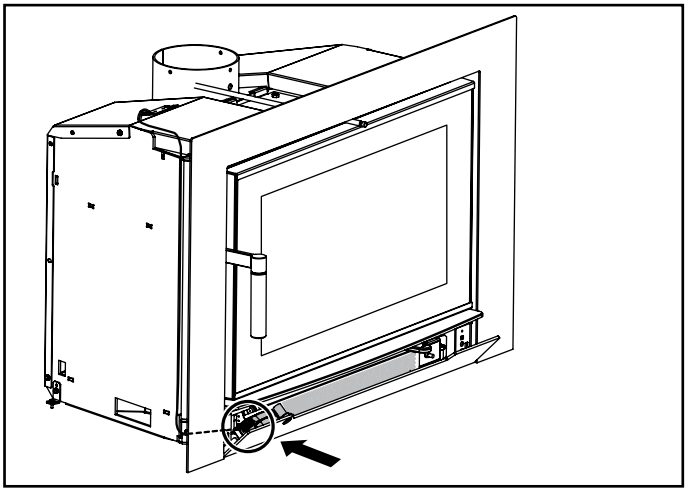

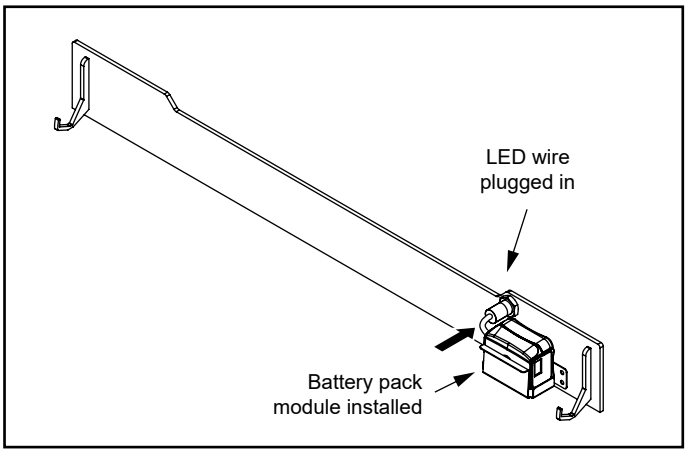

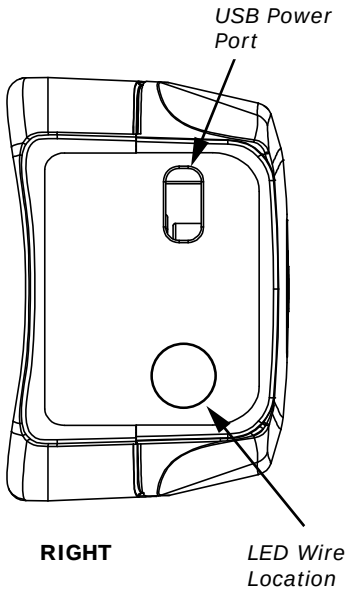

7. Attach the catalyst temperature probe to the battery pack module. Route the wire behind the faceplate and coil up any excess wiring and attach to the unit. Close the fan cover.

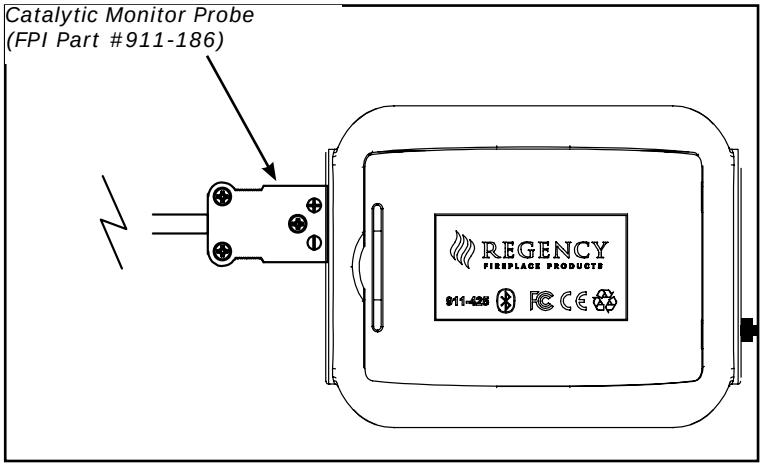

Catalytic Combustor Monitor Device - Operating Information

The catalytic combustor monitor operation is listed below.

1. The LED monitor indicates when the bypass should be open or closed.
During start-up the bypass should be open as indicated by a flashing white light

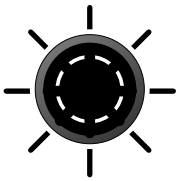

Flashing WHITE

2. Once the unit has reached steady operating temperature of 500 degrees F / 260 degrees C (after approximately 20 minutes) the LED will glow solid white. This indicates the bypass should be closed.

Solid WHITE

3. If the temperature drops below 500 degrees F / 260 degrees C, the light will flash white

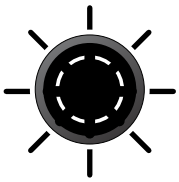

Flashing WHITE

4. If the temperature goes beyond 1500 degrees F / 815 degrees C the unit is over temperature, and the light will rapidly flash red. Close the draft control to lower the temperature

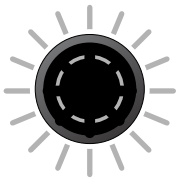

Flashing RED

Temperature F/C	LED	Bypass	Status
< 200°F/93°C	OFF	Open	Cold
> 250°F/121°C	FLASH WHITE	Open	Warm up
> 500°F/260°C	ON WHITE	Closed	Operating temperature
< 200 - 450°F 93 - 232°C	FLASH WHITE	Open	Reload
>1500°F/815°C	FLASH RED	Closed	Over temperature - close draft
<100°F/38°C	OFF	Open	Cold

Catalytic Combustor Digital Display Monitor - Optional Accessory

There is an optional accessory catalytic temperature monitoring device with a digital display. Please follow instructions below for the installation of the probe. Follow the user instructions of the catalytic monitoring device for product set up and details.

Important: The catalytic monitor probe which is supplied with this appliance must be installed prior to sliding the unit into final position in the masonry fireplace.

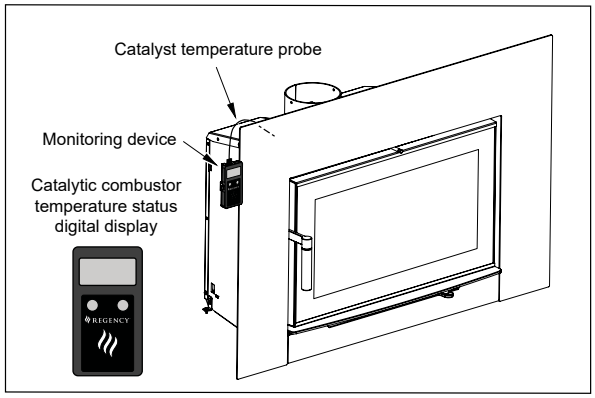

1. Remove two (2) bolts from the top of the unit to remove plate as shown below.

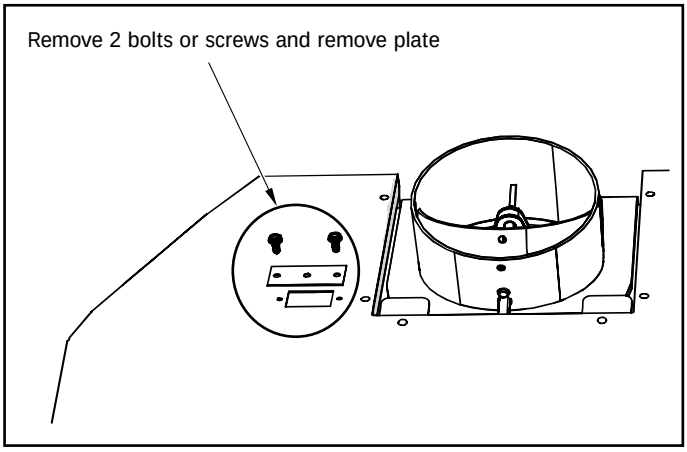

2. Locate the 7/16" bolt below the metal and remove.

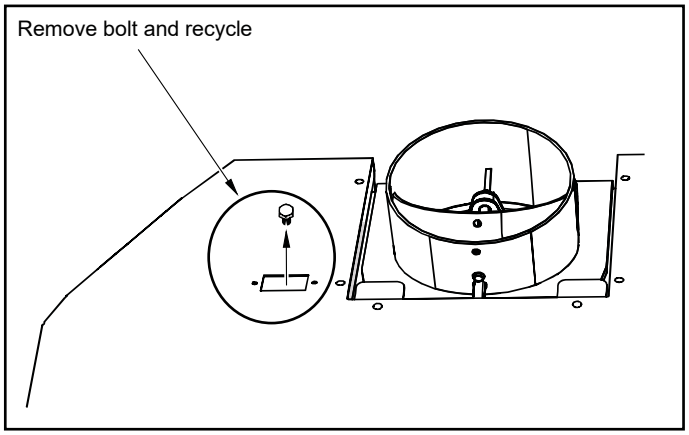

3. Reinstall & secure the plate removed in Step 1 and insert the temperature probe through the plate and into the hole created by removing the 7/16" bolt in Step 2.

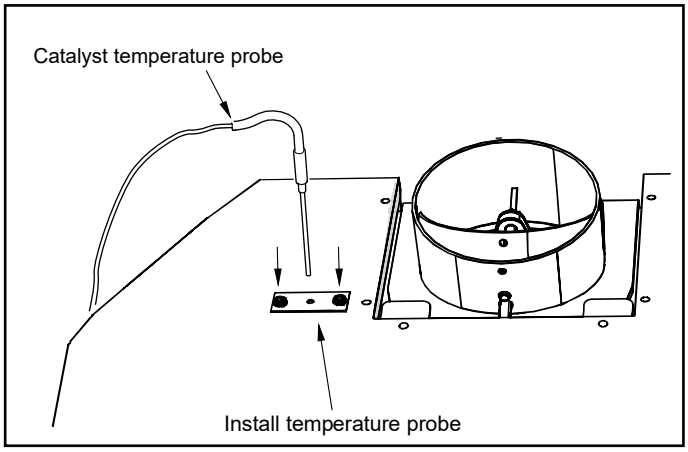

4. Complete the installation of the i3000. Ensure temperature probe wire is routed behind the faceplate and to the left side of the unit. Plug in the probe to the monitoring device, and use mounting bracket.

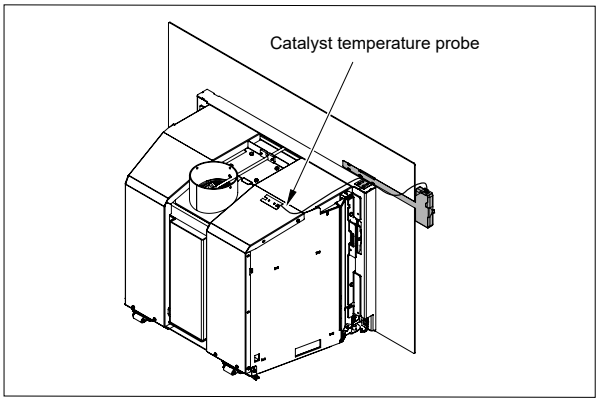

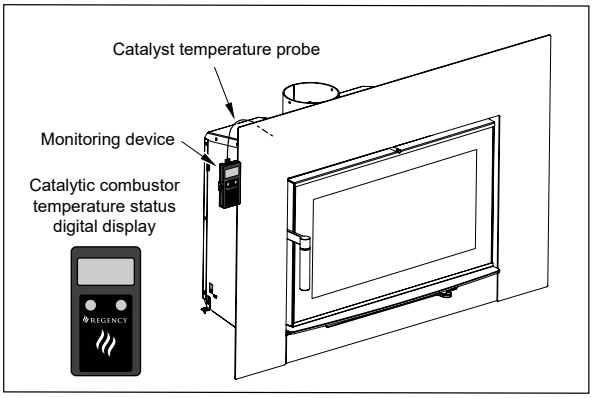

5. Install 9 Volt battery into the back side of the monitor.

See instruction user guide that accompanies the digital monitor.

Contemporary/Classic/Arched/Custom Faceplate Installation

These instructions are for use with the following products:

PART #	Description
166-910	Contemporary Faceplate
166-911	Contemporary Faceplate Oversize
166-912	Classic Faceplate
166-913	Classic Faceplate Oversize
166-914	Arched Faceplate
166-937	Custom Faceplate

1. Remove the door by lifting up and out, then remove the four 7/16” bolts.

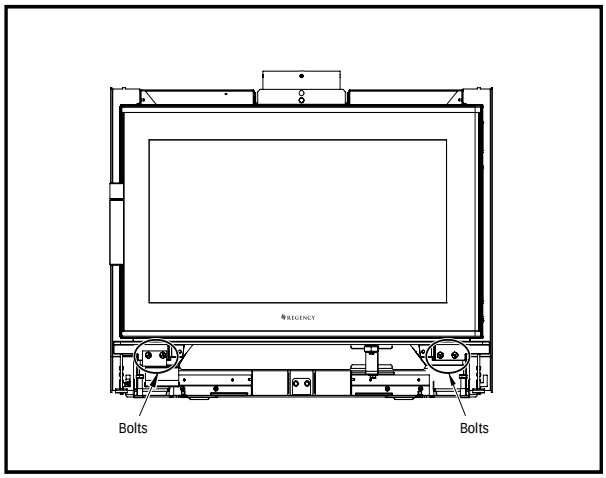

2. If the unit has either a premium surround or traditional extrusion accessory, attach it to the faceplate before mounting.
3. Install the faceplate by screwing in three 7/16” hex head bolts and a Phillips countersunk screw at the top right.

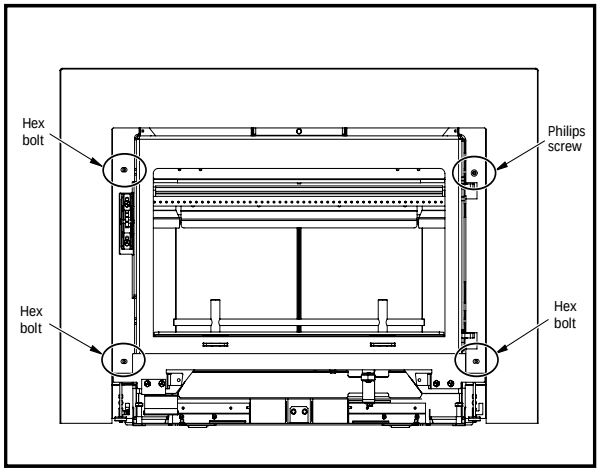

4. Install the ash lip on the unit using the bolts that were removed in Step 1.

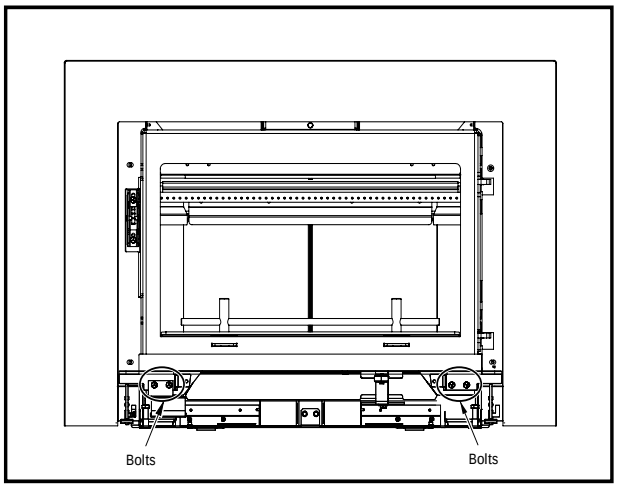

5. Gently attach the door onto the unit.

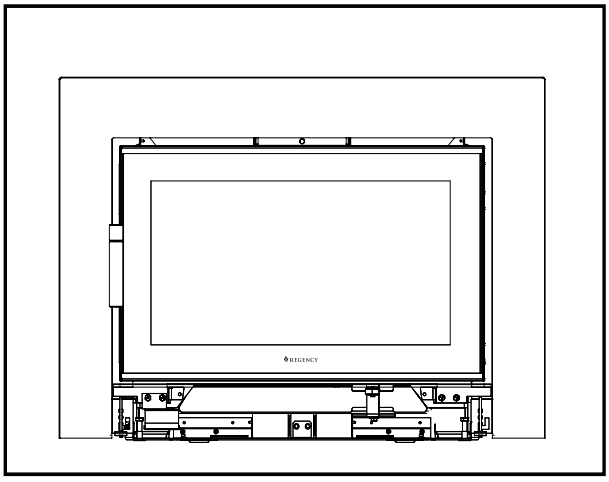

6. Install the fan cover by tilting it slightly so the hooks can fit into the side slots in the faceplate. Once hooks are inside the slots, slide the fan cover left to its final position.

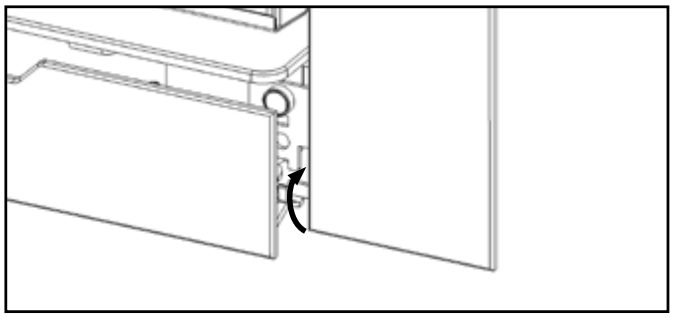

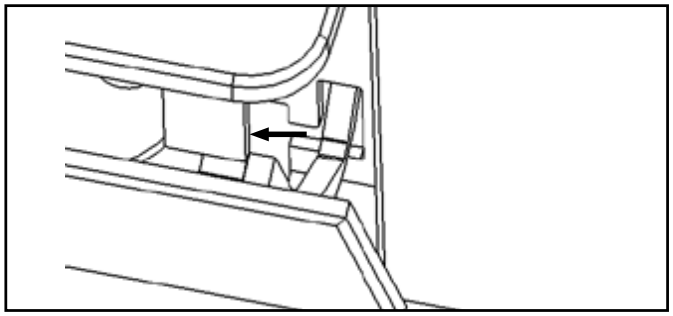

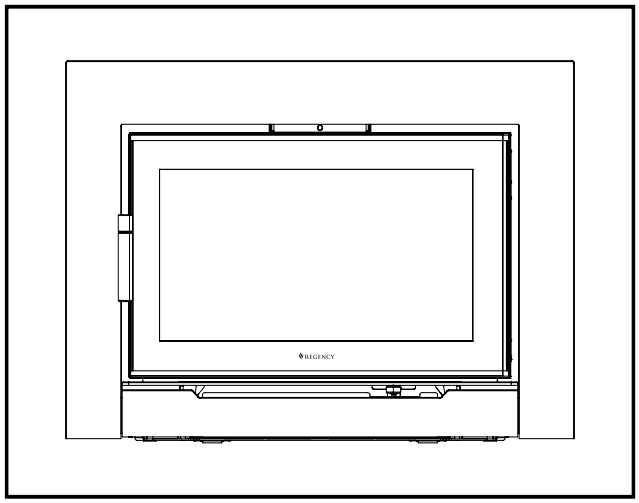

Cast Faceplate Installation

These instructions are for use with the following products:

PART #	Description
166-921	Cast Faceplate - Black
166-925	Cast Faceplate - Brown

1. Remove the door, then remove the four 7/16” bolts. Then layout all contents from the faceplate package.

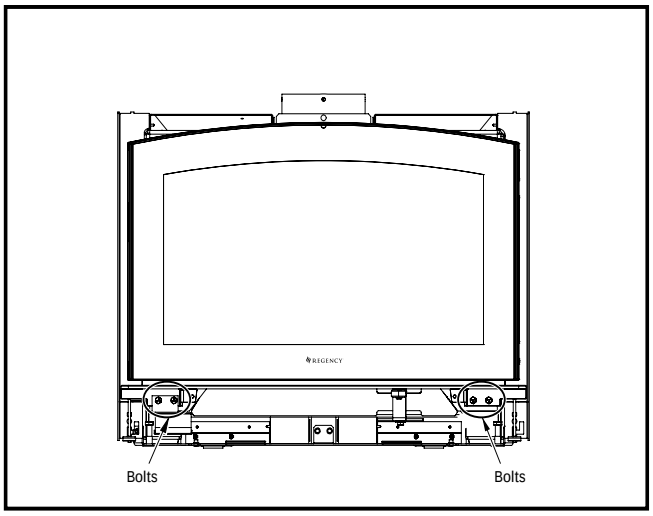

2. Attach the bracket and alignment bracket to the back side of the fascia panels using the eight 7/16” bolts.

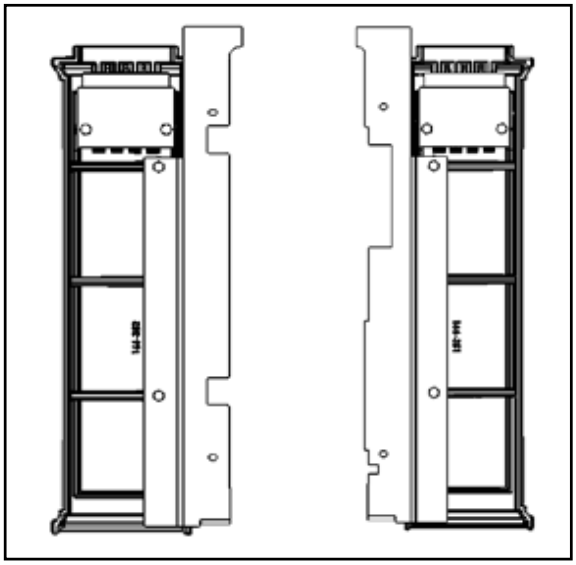

3. Install the faceplate by screwing in three 7/16” hex head bolts and a Phillips countersunk screw at the top right.

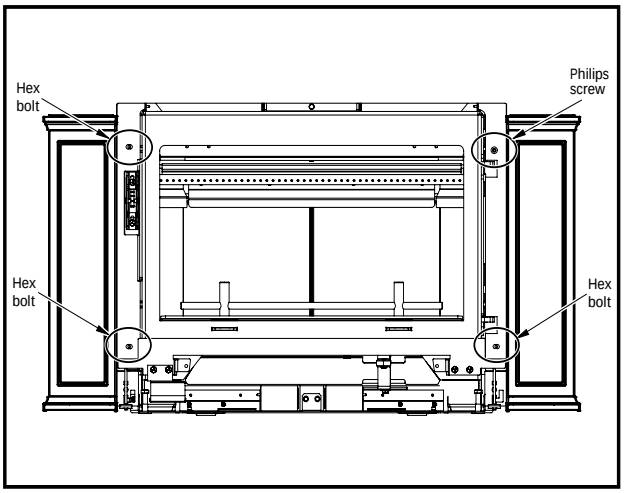

4. Reinstall the unit door and install the ash lip.
5. Install the fan cover onto the ash lip by using two 7/16” bolts.

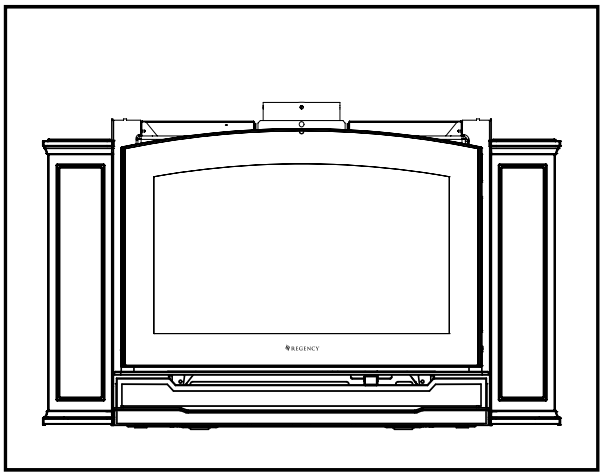

6. Lift the top fascia panel up (use care as it is heavy) and slide down into the brackets.

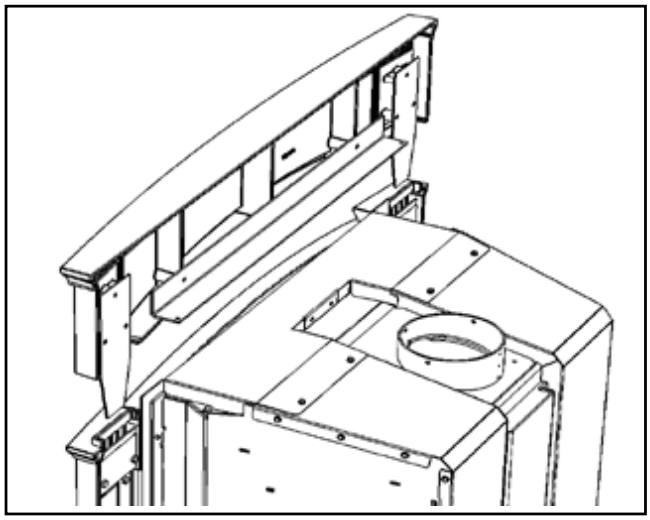

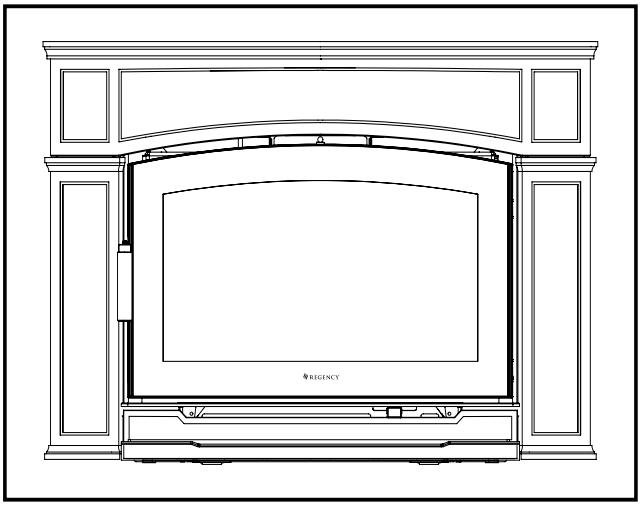

Fan Installation

NOTES
- If using the optional cast faceplate, see next page for complete instructions.
- The fan should only be installed once the unit is in place in order to prevent damage.

Installer: Record unit serial number here before installing blower.

Serial No._____

This fan assembly can only be installed in a heater that is marked to allow its use. Install your fan once the unit is in place in order to prevent damage.

1. Remove the two #10 self-tapping screws located at the bottom of the unit.

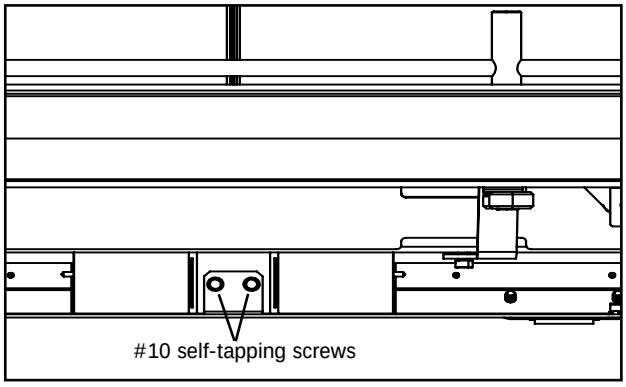

2. Install the thermodisc using the two screws removed in step 1. Make sure the thermostat is pressed up against the bottom of the firebox.

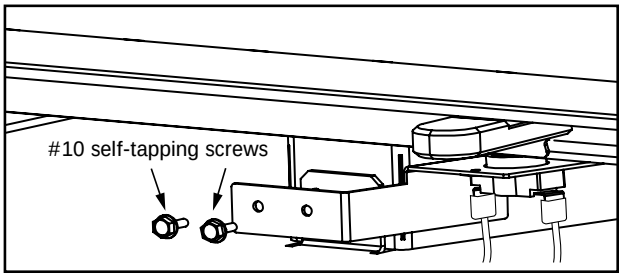

3. Remove the two 7/16” bolts on the right side of the ash lip.

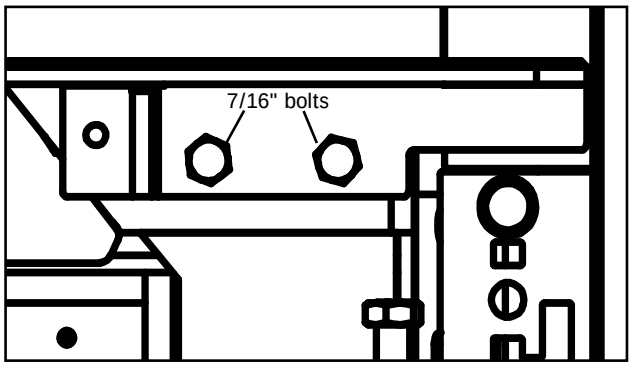

4. Install the rheostat using the two 7/16” bolts removed in step 3.

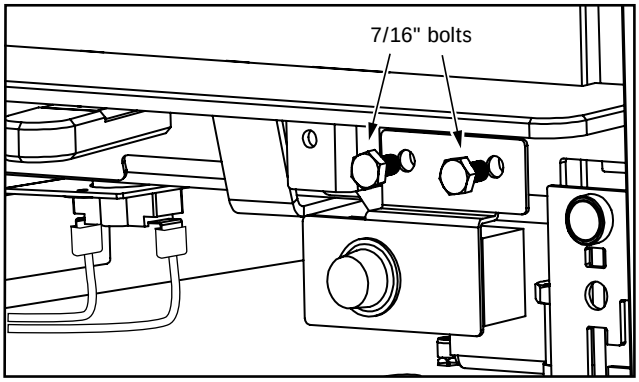

5. Attach the fan assembly by sliding it into the welded clip on either side of the unit. The power plug will come out on the left side. It can come out on the right side by placing it between the fan cover and fan.

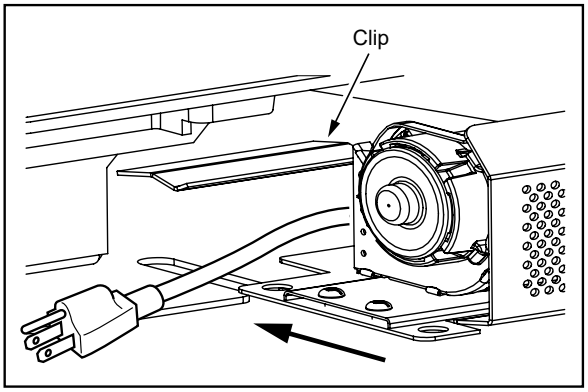

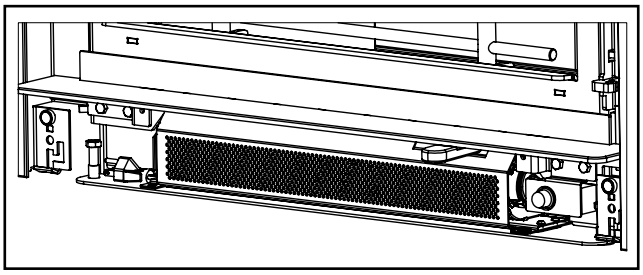

Fan Installation When Using Cast Faceplate

1. Lay out the fan assembly and unplug the red and green cables connecting to the rheostat.

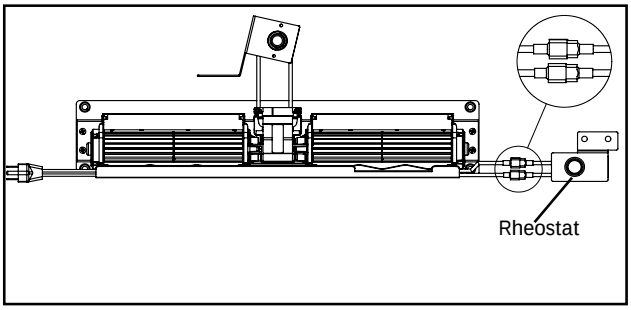

2. Connect the red and green cables that were just disconnected from the fan to the cast fan cover.

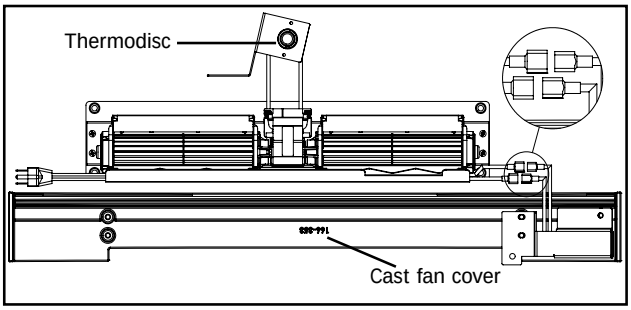

3. Remove the two #10 self-tapping screws screws located at the bottom of the unit.

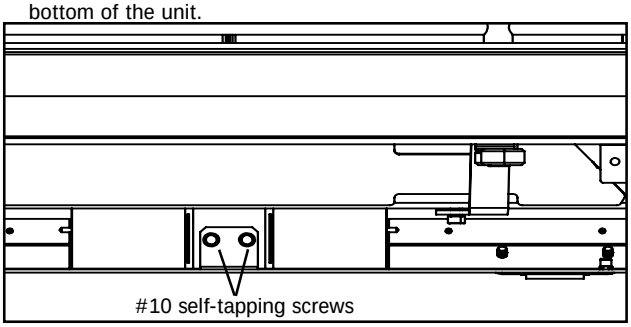

4. Install the thermodisc using the two screws removed in step 2. Make sure the thermostat is pressed up against the bottom of the firebox.

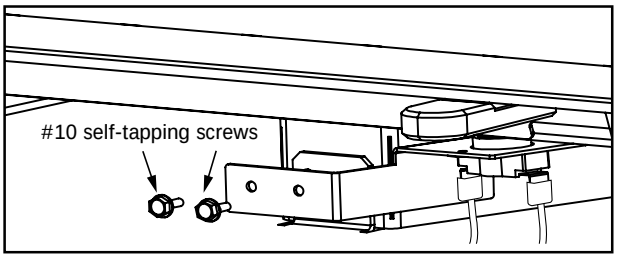

5. Attach the fan assembly by sliding it into the welded clip on either side of the unit. The power plug will come out on the left side. It can come out on the right side by placing it between the fan cover and fan.

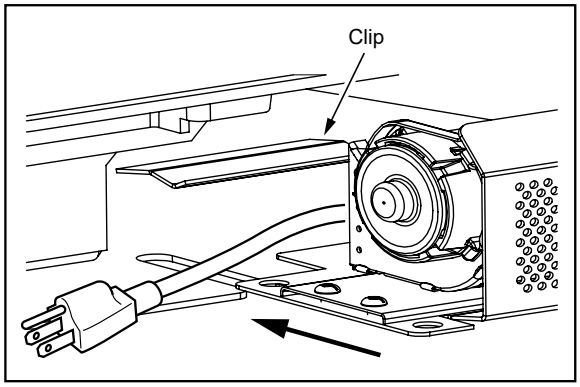

6. Install the fan cover onto the ash lip by using two 7/16" bolts.

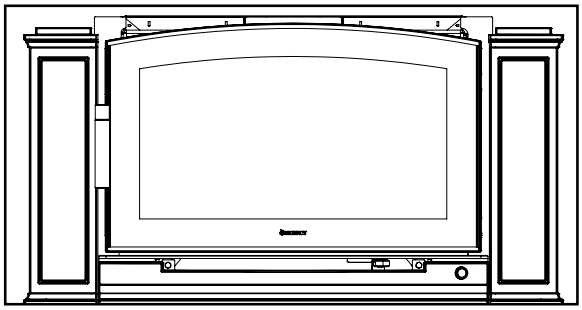

Fan Operation

The fan is controlled by a rheostat which regulates heat output.

The fan will turn on as the stove comes up to operating temperature. The rheostat will also shut the fan system off after the fire has gone out and the unit has cooled to below a useful heat output range.

If the fan cycles on and off continuously, the thermo switch sensor is not making contact with the stove body. Remove the fan, bend the bracket closer to the stove, and re-install the fan.

Operate the fan in the <LOW> position when burning in the <LOW-MED> heat output setting, and on <HIGH> when burning in the <MED-HIGH> settings.

WARNING

Electrical Grounding Instructions

- **This appliance is equipped with a three-prong plug for your protection against shock hazard and should be plugged directly into a properly grounded three-prong receptacle. Do not cut or remove the grounding prong from this plug.**
- **Label all wires prior to disconnection when servicing controls. Wiring errors can cause improper and dangerous operation.**
- **Fan assembly must be disconnected from the source of electrical supply before attempting the installation.**

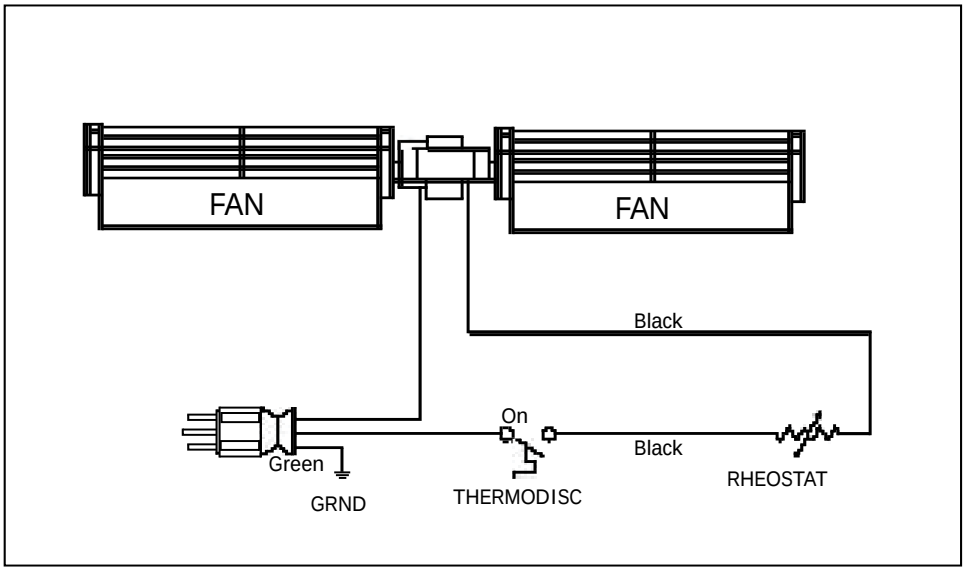

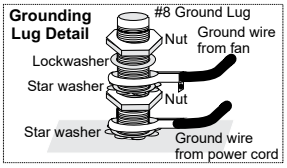

Fan Installation - Optional Hardwire Kit

1. Remove the fastener and install bracket on the right side of the unit, and feed wires of hardwire through the bracket.

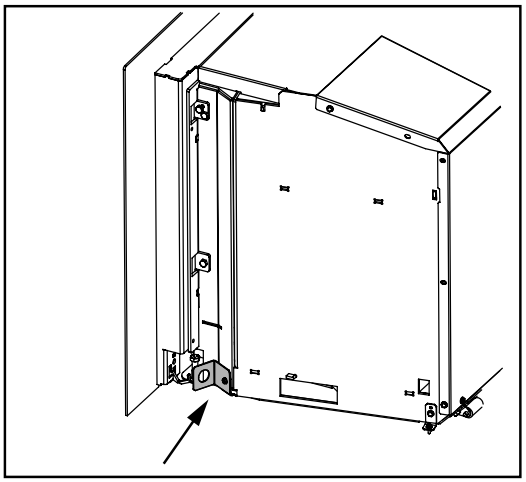

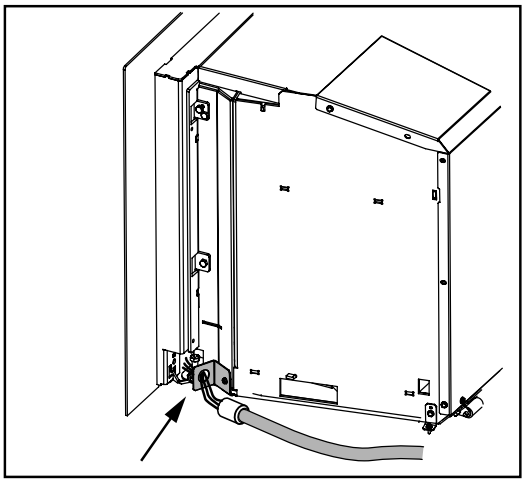

2. Remove fan and slide forward to access wiring.

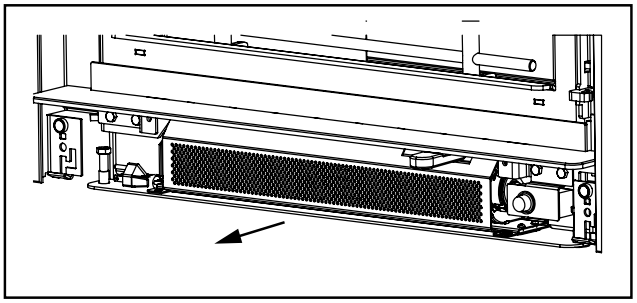

3. Disconnect wires from AC plug harness from the thermodisc, fan, and disconnect the green ground wire. Remove plug harness.

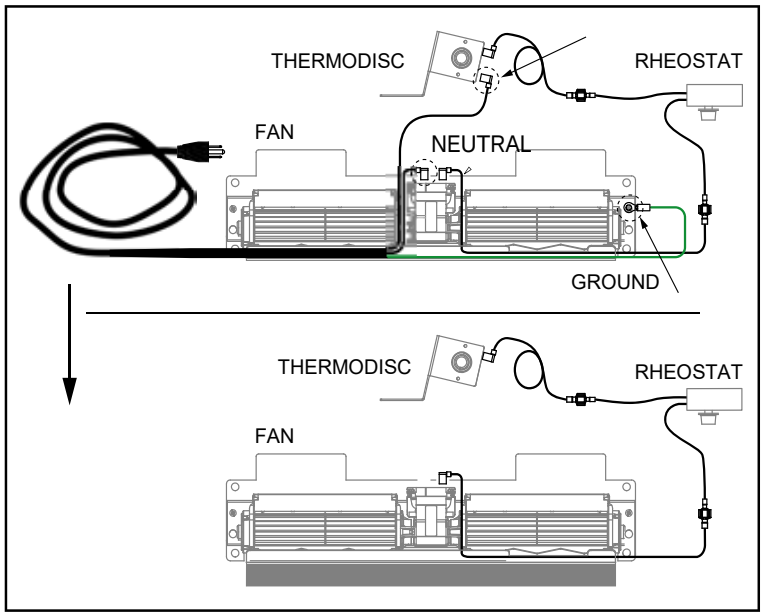

Fan Installation - Optional Hardwire Kit

4. Attach right angle connector on wire 1 from kit to thermodisc and connect to hardwire with twist-on wire connector.
5. Attach right angle connector on wire 2 from kit to fan and connect to hardwire with twist-on wire connector.
6. Attach hardwire bare ground wire to unit.

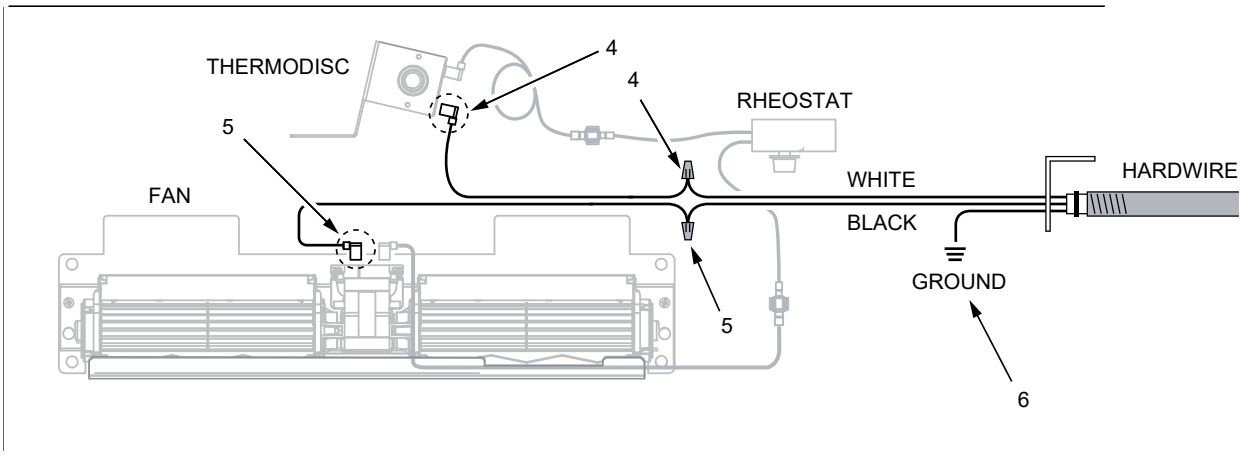

7. Reinstall fan.

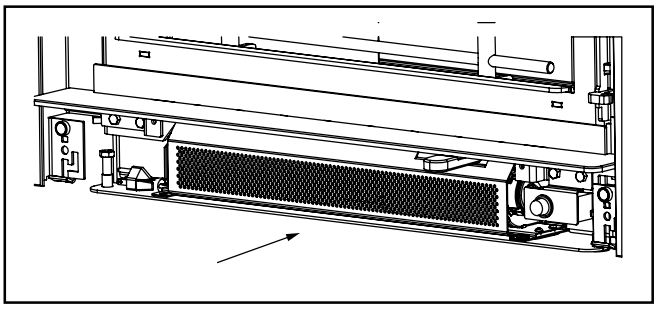

8. Install hardwire conduit terminal to bracket.

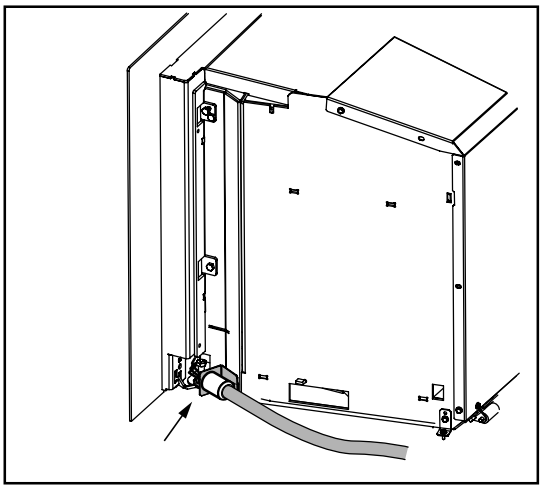

9. Install junction box per local electrical code and connect hardwire.

Levelling Bolt Installation

1. Use a 9/16” wrench to adjust the front leveling bolts located on the right and left side of the firebox.

Note: The leveling bolts add 3/4" (19 mm) to the overall height when adjusted all the way down = 25-3/4" (654 mm).

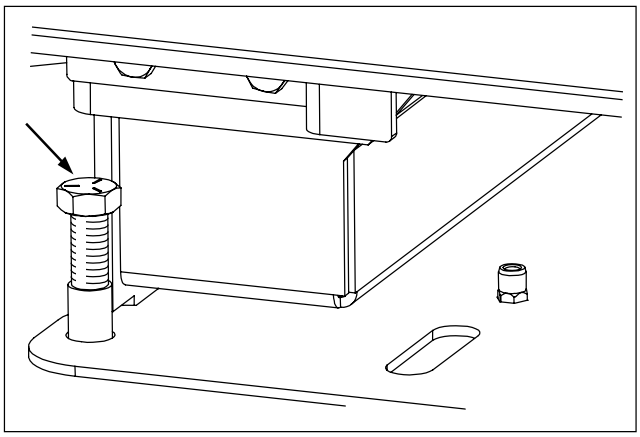

2. Remove the bottom refractory panels, then the side panels to gain access to the rear levelling bolts. You can adjust them using a 9/16” (14 mm) wrench or socket.

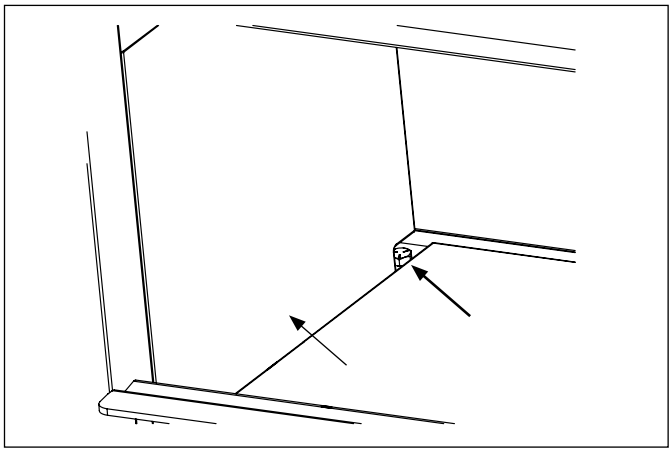

Andiron Installation

Install the andirons by sliding them on top of the pins located at the front of the unit.

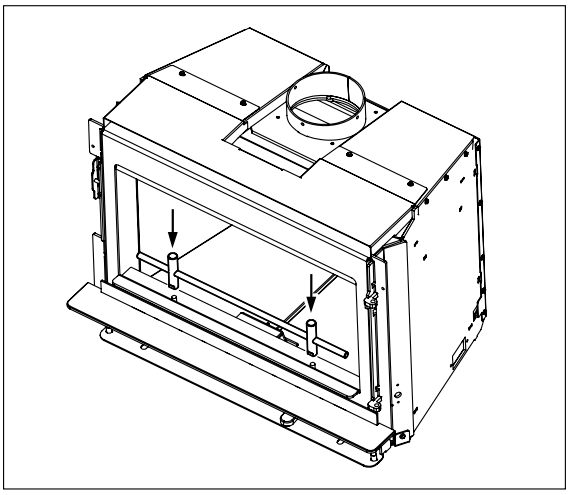

Brick Panel Installation

166-960 Firebrick - Complete Set in Order of Installation

Item	Part #	Description
1	166-085	Firebox Floor - Lytherm Sheet
2	166-303/P	Rear Refractory Bricks
3	166-304/P (Right), 166-305/P (Left)	Right and Left Side Bricks
4	166-302/P (Right), 166-301/P (Left)	Bottom Right and Left Refractory Bricks

Bricks will be installed in the unit. Remove bricks to reduce unit weight when installing the unit and to access rear leveling bolts.

A) Install Lytherm sheet (1) onto firebox floor
B) Install the bottom refractory bricks (4) onto the Lytherm sheet (1)
C) Install rear refractory bricks (2)
D) Install right brick (3) & left brick (3)

NOTE The brick retainers do not need to be removed to install this brick kit.

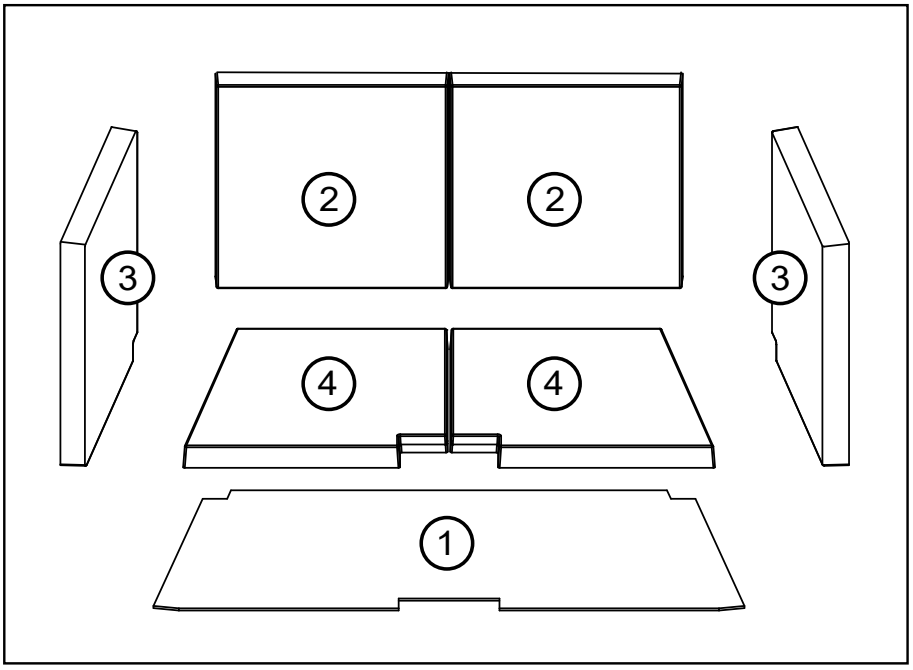

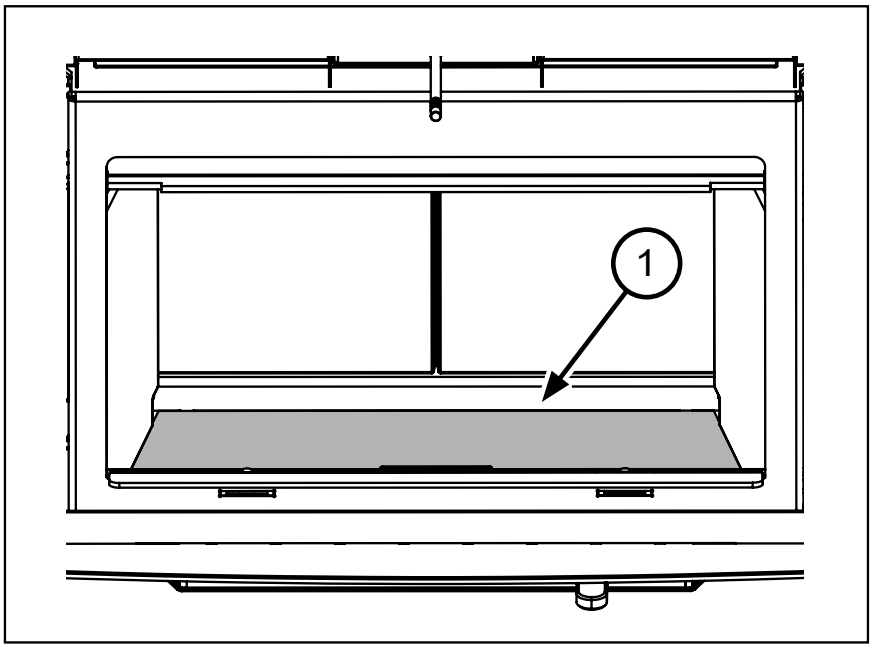

Seasoned Wood

Whether in a fireplace, stove, or insert, good quality firewood is the key to fire efficiency and safety. Wet wood and pieces that are not the right size and shape for your wood burner can be frustrating, burn inefficiently and deposit creosote that can fuel a dangerous chimney fire. Good seasoning and storage of the firewood supply are essential to successful wood burning.

- Stack the wood in separate rows in an open location where the summer sun can warm it and breezes can carry away the moisture.
- Do not stack unseasoned wood tightly in an unvented storage area.
- Do not allow firewood to lie on the ground for more than a couple of days before stacking. Mould and rot can set in quickly.
- Stack the wood off the ground on poles, lumber rails, or pallets.
- The top of the pile can be covered, not the sides.

Softer woods like pine, spruce, and poplar/aspen that is cut, split, and stacked properly in the early spring maybe be ready for burning in the fall. Hard woods like oak and maple and large pieces of firewood may take a minimum of one year to dry. Drying may also take longer in damp climates.

Here are a few ways to tell if your wood is dry enough to burn efficiently. Use as many indicators as possible to judge the dryness of your firewood.

- Using a moisture meter, penetrate the pins into a split piece of wood. The ideal moisture level of seasoned firewood is less than 20%.
- Checks or cracks in the end grain can be an indication of dryness, but may not be a reliable indicator. Some wet wood has checks and some dry wood has no checks.
- The wood tends to darken from white or cream colour to grey or yellow as it dries.
- Two dry pieces banged together sound hollow; wet pieces sound solid and dull.
- Dry wood weighs much less than wet wood.
- Split a piece of wood. If the exposed surface feels damp, the wood is too wet to burn.
- The maximum length of wood that will fit in front, behind the andirons is 24 inches

Operating Instructions

With your unit now correctly installed and safety inspected by your local authority, you are now ready to start a fire. Before establishing your first fire, it is important that you fully understand the operation of your Catalytic combustor and draft control.

WARNING

Fireplace Inserts equipped with doors should be operated only with doors fully closed. If doors are left partly open, gas and flame may be drawn out of the fireplace insert opening, creating risks from both fire and smoke.

Load wood in the area between the andirons and the back of the firebox. Do not load in front, between the andirons and the door glass.

Draft Control

Both the primary and air wash drafts are controlled by the control slide located on the front right side of the unit (when facing the unit). To increase your draft - slide to the right to open, and to decrease - slide to the left to close. The i3000A/i3000R Wood Insert has a secondary draft system that continually allows combustion air to the induction ports at the top of the firebox, just in front of the catalytic combustor.

Draft is the force which moves air from the appliance up through the chimney. The amount of draft in your chimney depends on the length of the chimney, local geography, nearby obstructions and other factors. Too much draft may cause excessive temperatures in the appliance and may damage the catalytic combustor. Inadequate draft may cause back puffing into the room and plugging of the chimney or catalyst.

In - Closed **Out - Open**

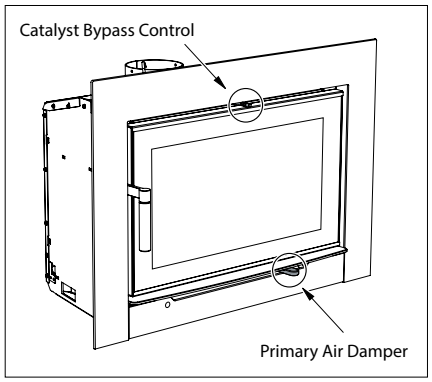

Left - Closed **Right - Open**

WARNING: To build a fire in ignorance or to disregard the information contained in this section can cause serious permanent damage to the unit and void your warranty!!

First Fire

When your installation is completed and inspected you are ready for your first fire.

THIS UNIT IS DESIGNED TO BURN SEASONED CORDWOOD ONLY. COAL, BRIQUETTES AND ALL OTHERS LISTED ON PAGE 2 ARE NOT APPROVED. SEASONED CORDWOOD SHOULD BE LESS THAN 20% MOISTURE CONTENT.

START UP AND OPERATING PROCEDURES:

1. For the first few days, the wood insert will give off an odour from the paint. This is to be expected as the high temperature paint becomes seasoned. Windows and/or doors should be left open to provide adequate ventilation while this temporary condition exists. Burning the wood insert at a very high temperature the first few times may damage the paint. During the first few fires, keep the combustion rate at a moderate level and avoid a large fire. Only after 5 or 6 such fires can you operate the wood insert at its maximum setting, and only after the metal has been warmed.
2. Do not place anything on the wood insert top during the curing process. This may result in damage to your paint finish. Prepare 3 batches of kindling. Split the batches of kindling as follows:
   Batch 1: Fine split, pieces roughly ¾" x ¾" (around 7lbs)
   Batch 2: Medium split 1 - 1.5 in. (around 7lbs)
   Batch 3: Course split 2 - 2.5 in. (around 7lbs)
3. When starting the fire, ensure the bypass is in the fully open position (pulled out) and air control is in the fully open position (far right). Crumble 2-5 pieces of newspaper and add approx. 7lbs of kindling (first batch) stacked in a manner that allows air flow on the firebrick hearth (Teepee style or other). DO NOT USE A GRATE TO ELEVATE THE FIRE.
   Light the newspaper and adjust the door if it is slightly ajar for less smoke roll out. Keep the door in that position for 4-5 minutes to establish a good fire.
4. When ~2lb remains (roughly 20-30min), rake the coals so any unburnt pieces are left on top, and then add Batch 2 of kindling on top in a crisscross pattern. Close the door immediately after loading, and then close the bypass 5 minutes later or when the combustor is active. It shows a temperature above 500ºF.
   CAUTION: Never leave unit unattended if door is left open. This procedure is for fire start-up only, as unit may overheat if door is left open for too long.
5. When ~2lb – 2.5lb remains (roughly another 20-30min), open the by-pass, then open the door to rake the coals so any unburnt pieces are left on top, and then add Batch 3 on top in a crisscross pattern. Close the door and by-pass immediately after loading.
   NOTE: These steps are crucial to ensure proper charcoalization and coal bed prior to loading the main wood loads for Low, medium low, medium high or high burn fire loads.
6. Once this has burned down, open the door and the bypass, and rake the coals to create a uniform charcoal bed. The load consists of 5 logs 17 in. to 20 in. long: Load in an East West orientation 2 pieces 17" long in the back one on top of each other, 2 pieces 18.5" long stacked in the middle and 2 logs 20" long in front one on top of each other, and ensure all pieces are behind the log retainers. Once loaded, close the door and the bypass right away. Burn on high setting (air control to the far right when facing the unit) for 10-15 minutes. After the 10-15 minutes, adjust the air control to your desired position.
   High fire: Air control to far right
   Low fire: Air control to far left
   Medium low fire: air control 1/4" or less to the right of the low fire setting
   Medium high fire: approx 0.5" or more to the right of the low fire setting.
7. IMPORTANT: The temperature in the wood insert and the gases entering the combustor must reach between 500ºF - 700ºF (260ºC - 371ºC) for catalytic activity to start. From the start up of a cold wood insert, a medium to high firing rate must be maintained for 30 min. This ensures that the wood insert, catalyst and fuel are all stabilized at proper operating temperatures. Even though it is possible to have temperatures at 600ºF (315ºC) within minutes after a fire has been started, if the fire is allowed to die down immediately it may go out or the combustor may stop working. Once the combustor starts working, heat generated in it by burning the smoke will keep it working. During re-fueling and rekindling of the cool fire, or a fire that has burned down to the charcoal phase, operate the wood insert at a medium to high firing rate for about 10 minutes to ensure that the catalyst reaches operating temperatures.
   WARNING: Never build a roaring fire in a cold wood insert. Always warm your wood insert up slowly!
8. When re-fueling, always open by-pass control, and primary air damper, load fuel, then wait for at least 10-15 minutes before closing the by-pass. Reason for the 10-15 min. is the fresh fuel and the opening of the door will cause the catalyst to drop in temperature as well as the moisture within the wood which is the first thing to be released. This will also minimize any smoking (spilling) back into the room.
9. During the first few days it may be more difficult to start the fire. As you dry out your firebrick and your masonry flue, your draft will increase.
10. For those units installed at higher elevations or into sub-standard masonry fireplaces, drafting problems may occur. Consult an experienced dealer or mason on methods of increasing your draft.
11. Some cracking and popping noises may be experienced during the heating up process. These noises will be minimal when your unit reaches temperature.
12. All fuel burning appliances consume oxygen during operation. It is important that you supply a source of fresh air to your unit while burning. A slightly opened window is sufficient for the purpose. If you also have another fireplace in your home, a downdraft may be created by your Regency wood insert causing a draft down your

chimney. If this occurs, slightly open a window near your unit.

CAUTION: If the body of your wood insert, or any part of the chimney connector starts to glow, you are over firing. Stop loading fuel immediately and close the draft control until the glow has completely subsided.

13. Green or wet wood is not recommended for your unit. If you must add wet or green fuel, open the draft control fully until all moisture has been dispersed by the intense fire. Once all moisture has been removed, the draft control may be adjusted to maintain the fire.

14. If you have been burning your stove on a low draft, use caution when opening the door. After opening the damper, open the door a crack, and allow the fire to adjust before fully opening the door.

15. The controls of your unit or the air supply passages should not be altered to increase firing for any reason.

16. If you burn the unit too slowly or at too low a setting your unit will not be operating as efficiently as it can. An easy rule of thumb says that if your glass is clean, catalytic thermostat is active, then your flue is clean and your exhaust is clean. Burn the stove hot enough to keep your glass clean and catalytic combustor, you won't need to clean your flue as often.

HOT WHILE IN OPERATION. KEEP CHILDREN, CLOTHING AND FURNITURE AWAY. CONTACT MAY CAUSE SKIN BURNS.

Ash Disposal

During constant use, ashes should be removed every few days. Please take care to prevent the build-up of ash around the start-up air housing located inside the firebox, under the loading door lip.

DO NOT ALLOW ASHES TO BUILD UP TO THE LOADING DOORS.

Only remove ashes when the fire has died down. Even then, expect to find a few hot embers. Always leave 1 to 2 inches of ash in the bottom of the firebox. This helps in easier starting and a more uniform burn of your fire.

Ashes should be placed in a metal container with a tight fitting lid. The closed container of ashes should be placed on a noncombustible floor or on the ground, well away from all combustible materials, pending final disposal. If the ashes are disposed of by burial in soil or otherwise locally dispersed, they should be retained in the closed container until all cinders have thoroughly cooled. Other waste should not be placed in the ash container.

Fan Operation

AUTOMATIC

To operate the fan, turn on the rheostat. This will allow the fan to turn on when the stove comes up to operating temperature. It will also shut the fan system off after the fire has gone out and the unit cools to below a useful heat output range.

Operate the fan in the low speed position when burning in the LOW-MED LOW heat output ranges, and operate it on the high setting for MED-HIGH to HIGH heat outputs. Route the power cord to the left or right behind the unit.

See draft control instructions for operation of air control. When the appliance is cool it is important to clean in and around the fan. Always ensure areas on the hearth are clean and ashes, debris etc. are not pushed towards the bottom of the fascia. Always brush and clean debris away from the unit, not towards.

Creosote

When wood is burned slowly, it produces tar and other organic vapors, which form creosote when combined with moisture. The creosote vapors condense in the relatively cool chimney flue of a slow-burning fire. As a result, creosote residue accumulates on the flue lining. When ignited, this creosote can make an extremely hot fire.

For wood-burning heaters, reference to the formation and removal of creosote buildup in the chimney connector and chimney as follows (the inspection frequency "once every two months' stated below may be a shorter time period at the manufacturer's or private labeler's options):

"Creosote - Formation and Need for Removal

The chimney connector and chimney should be inspected at least once every two months during the heating season to determine if a creosote buildup has occurred.
If creosote has accumulated it should be removed to reduce the risk of chimney fire.

Removal for Cleaning

Removal of your insert for cleaning purposes is usually not required if a proper installation has been done. In the event that removal is required, be sure not to damage any parts needed for re-installation. In most cases removal and replacement of the baffle system should allow full access for cleaning.

WARNING: In case of chimney fire:

1. **Close draft control**
2. **Call the Fire Department**

Ways to Prevent and Keep Unit Free of Creosote

1. Burn insert with draft control wide open for about 45 minutes every morning during burning season. This helps to prevent creosote deposits within the heating system.

2. Burn insert with draft control wide open for about 10 - 15 minutes every time you add fresh wood. This allows the wood to achieve the charcoal stage faster and burns up any wood vapors which might otherwise be deposited within the system.

3. **Only burn seasoned wood!** Do not burn wet or green wood. Seasoned wood that has been dried at least one year must be used.

4. A small hot fire is preferable to a large smouldering one that can deposit creosote within the system.

5. Check the chimney at least twice a month during the burning season for creosote build-up.

6. **Have chimney system and unit cleaned by competent chimney sweeps twice a year during the first year of use and at least once a year thereafter or when a significant layer of creosote has accumulated (3mm / 1/8" or more) it should be removed to reduce the risk of a chimney fire.**

Wood Storage

Store wood under cover, such as in a shed, or covered with a tarp, plastic, tar paper, sheets of scrap plywood etc., as uncovered wood can absorb water from rain or snow, delaying the seasoning process.

Safety Guidelines & Warnings

DO NOT USE CHEMICALS FOR FLUIDS TO START FIRE.

CAUTION

1. Never use gasoline, gasoline type lantern fuels, kerosene, charcoal lighter fuel, or similar liquids to start or 'freshen up' a fire in your heater. Keep all such liquids well away from the heater while it is in use.

2. Keep the door closed during operation and maintain all seals in good condition.

3. Do not burn any quantities of paper, garbage, and never burn flammable fluids such as gasoline, naptha or engine oil in your stove.

4. If you have smoke detectors, prevent smoke spillage as this may set off a false alarm.

5. Do not overfire heater. If the chimney connector, flue baffle or the stove top begin to glow, you are over firing. Stop adding fuel and close the draft control. Over firing can cause extensive damage to your stove including warping and premature steel corrosion. Over firing will void your warranty.

6. Do not permit creosote or soot build-up in the chimney system. Check and clean chimney at regular intervals. Failure to do so can result in a serious chimney fire.

7. Your Regency stove can be very hot. You may be seriously burned if you touch the stove while it is operating, keep children, clothing and furniture away. Warn children of the burn hazard.

8. The stove consumes air while operating, provide adequate ventilation with an air duct or open a window while the stove is in use.

9. Do not connect this unit to a chimney flue serving another appliance.

10. Do not use grates, andirons or other methods for supporting fuel. Burn directly on the bricks.

Safety Guidelines & Warnings

11. Open the draft control fully for 10 to 15 seconds prior to slowly opening the door when refuelling the fire.

12. Do not connect your unit to any air distribution duct.

13. This heater is designed to burn natural wood only. Higher efficiencies and lower emissions generally result when burning air dried seasoned hardwoods, as compared to softwoods or to green or freshly cut hardwoods.

14. Do not store any fuel closer than 2 feet from your unit. Do not place wood, paper, furniture, drapes or other combustibles near the appliance.

15. Do not operate with cracked/broken, plugged, or glazing catalyst.

IMPORTANT : This wood heater contains a catalytic combustor, which needs periodic inspection and replacement for proper operation. It is against federal regulation to operate this wood heater in a manner inconsistent with operating instructions in this manual, or if the catalytic element is deactivated or removed.

16. The controls of your unit or the air supply passages should not be altered to increase firing for any reason.

17. If you burn the unit too slowly or at too low a setting your unit will not be operating as efficiently as it can. An easy rule of thumb says that if your glass is clean, catalytic thermostat is active, then your flue is clean and your exhaust is clean. Burn the stove hot enough to keep your glass clean and catalytic combustor, you won't need to clean your flue as often.

DO NOT BURN:

- Treated wood
- Coal
- Garbage
- Cardboard
- Solvents
- Colored Paper
- Trash
- Salt drift wood
- Cut lumber, plywood, mill ends.

Burning treated wood, garbage, solvents, colored paper or trash may result in release of toxic fumes and may poison or render ineffective the catalytic combustor. Burning coal, cardboard, or loose paper can produce soot, or large flakes of char or fly ash that can coat the combustor, causing smoke spillage into the room, and rendering the combustor ineffective.

DO NOT BURN GARBAGE OR FLAMMABLE LIQUIDS SUCH AS GASOLINE, NAPTHA OR ENGINE OIL. SOME FUELS COULD GENERATE CARBON MONOXIDE AND ARE VERY DANGEROUS.

CAUTION: DO NOT CONNECT TO, OR USE IN CONJUNCTION WITH ANY AIR DISTRIBUTION DUCT WORK UNLESS SPECIFICALLY APPROVED FOR SUCH INSTALLATION.

	Troubleshooting Guide	
PROBLEM	**POSSIBLE CAUSE**	**SOLUTION**
Crumbling Substrate	Extreme Thermal Shock Refueling with Wet Wood High Draft	Bypass combustor when the stove is running Use seasoned, dried wood. Do not exceed .06" of water draft. Install a manual damper and draft gauge or a barometric damper.
Fly-Ash Build-up Fly-Ash Masking Fly-ash Plugging	Combustor has not maintained light-off temperature. Combustor has not maintained light-off temperature. Burning materials that produce a lot of char and fly-ash. Closing the bypass too soon	Brush cold combustor with a soft bristled brush or vacuum lightly. Brush cold combustor with a soft bristled brush or vacuum lightly. Do not burn cardboard, gift wrap or garbage. Follow instructions for proper light-off.
Thermal Cracking	Uneven temperatures, flame impingement and heat spikes.	If cracking causes large pieces to fall out, replace combustor.
Mechanical Cracks	Combustor mishandled or abused. Distortion of combustor holder.	Handle combustor with care. Replace if necessary. Replace combustor is large pieces are missing, replace any warped stove parts as well.
Plugging (Creosote)	Burning wet, pitchy woods or burning large loads of small diameter wood with the combustor in the operating position without light-off ever occurring.	Burn dried seasoned wood. Make sure combustor has light-off before closing the bypass damper. It may be possible to burn off the soot or creosote accumulation by putting the combustor in a partially open and partially closed position after a hot fire has been started.
Masking (Soot)	Combustor has not maintained a light-off. Burning coal will cause a sulfur-based compound to coat the catalyst.	Place combustor in a partially open and partially position after a hot fire has been started to burn off the soot accumulation. Revert to burning wood and fire the combustor to elevated temperatures for one hour.

Catalytic Combustor (Part # 166-543)

This wood heater contains a catalytic combustor, which needs periodic inspection and replacement for proper operation.

ACHIEVING AND MAINTAINING CATALYST LIGHT-OFF:

There are some obvious signs of trouble that your inspection may reveal. The temperature in the stove and the gases entering the combustor must be raised to between 500°F to 700°F (260°C to 371°C) for catalytic activity to be initiated. During the start up of a cold stove a medium to high firing rate must be maintained for about 30 minutes. This ensures that the stove, catalyst and fuel are all stabilized at proper operating temperatures. Even though it is possible to have temperatures at 600°F (315°C) within minutes after a fire has been started, if the fire is allowed to die down immediately it may go out or the combustor may stop working. Once the combustor starts working, heat generated in it by burning the smoke will keep it working. During re-fueling and rekindling of the cool fire, or a fire that has burned down to the charcoal phase, operate the stove at a medium to high firing rate for about 10 minutes to ensure that he catalyst reaches operating temperatures.

CATALYST MONITORING: It is important to periodically monitor the operation of the catalytic combustor to ensure that it is functioning properly and to determine when it needs to be replaced. A non-functioning combustor will result in a loss of heating efficiency, and an increase in creosote and emissions. Following is a list of items that should be checked on a periodic basis.

- Combustors should be visually inspected at least three times during the heating season to determine if physical degradation has occurred. Actual removal of the combustor is not recommended unless more detailed inspection is warranted because of decreased performance. If any of these conditions exist, refer to Catalyst trouble shooting section of this owner's manual.

- A good combustor is designed to withstand approximately 12,000 hours of continuous use. This will translate into five to ten years of use, depending on the length of your heating season and how often you use your stove. Proper maintenance will increase the combustor's effectiveness and prevent many problems. Inspect your combustor before each heating season, and during the season if your stove's performance seems to change.

- You can get an indication of whether the catalyst is working by comparing the amount of smoke leaving the chimney when the smoke is going through the combustor and catalyst light – off has been achieved, to the amount of smoke leaving the chimney when the smoke is not routed (by-pass open) through the combustor.

Step 1: Light the stove in accordance with instructions within this manual.
Step 2: With smoke routed through the catalyst (by-pass closed) go outside and observe the emissions leaving the chimney.
Step 3: Engage the bypass mechanism and move to by-pass open position. And again observe the emission leaving the chimney. Significantly more smoke should be seen when the smoke is not routed through the combustor (by-pass open). Be careful not to confuse smoke with steam.

ACHIEVING PROPER DRAFT: Draft is the force which moves air from the appliance up through the chimney. The amount of draft in your chimney depends on the length of the chimney, local geography, nearby obstructions and other factors. Too much draft may cause excessive temperatures in the appliance and may damage the catalytic combustor. Inadequate draft may cause back puffing into the room and plugging of the chimney or catalyst.

CATALYTIC COMBUSTOR CLEANING:

Method #1
A vacuum cleaner may be used, but **never use high pressured air** to blow the cells free of any build-up. This can damage the cell walls. Any cell blockage can be removed with the use of a pipe cleaner or a cotton swab as well.
Method #2
Should the combustor's cells become covered with fly-ash, use a paint-brush or soft-bristled brush and dust the combustor gently. Never use anything abrasive to clean the combustor.
Method #3
Normally the catalytic combustor requires little or no maintenance, it generates such high temperatures and therefore is basically self-cleaning. However, should the combustor become covered with soot or creosote, it is possible to burn the accumulation off by opening the bypass and building a hot fire. Once the hot fire is created, close the bypass halfway and burn for 30 to 60 minutes with the bypass left in this position. **Never use cleaning solvents to clean it.** Check and clean the combustor, if necessary, before each burning season and inspect the flue system for any signs of creosote buildup. A clean flue helps prevent chimney flue fires.

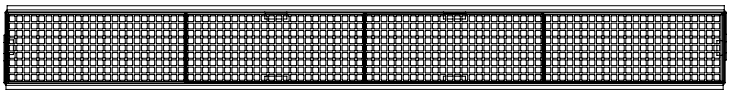

Catalyst Combustor

Combustor Assembly Removal / Replacement

If the combustor must be examined or replaced, follow this procedure:

1. Allow the stove to burn out and cool down.

2. Open the door and loosen the two 7/16″ bolts -see locations below.

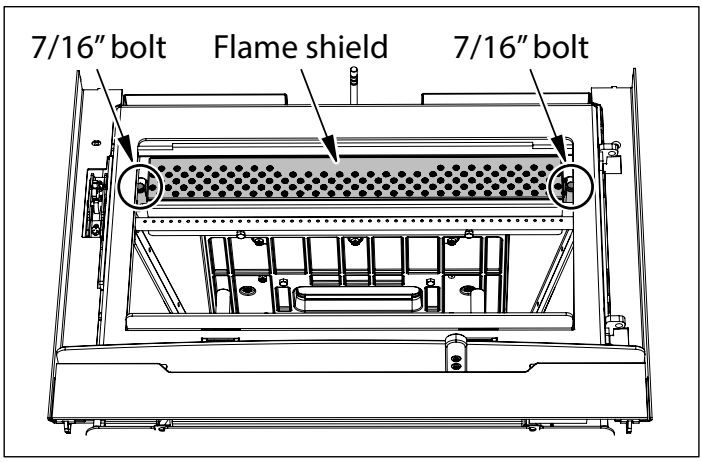

3. Lift flame shield slightly upwards in keyhole slot and pull it forward and down.

4. Use a pair of pliers and gently slide out the band at each end. The assembly will loosen enough that it can be pulled forward, lowered, and pulled out through the door.

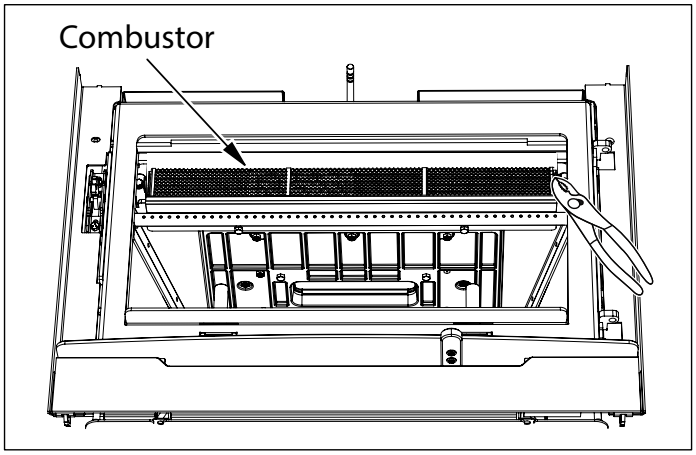

NOTE: If also replacing the gasket in the bypass door (see next page), remove the lid of the bypass door while it is accessible and complete steps in Bypass Door Gasket Replacement.

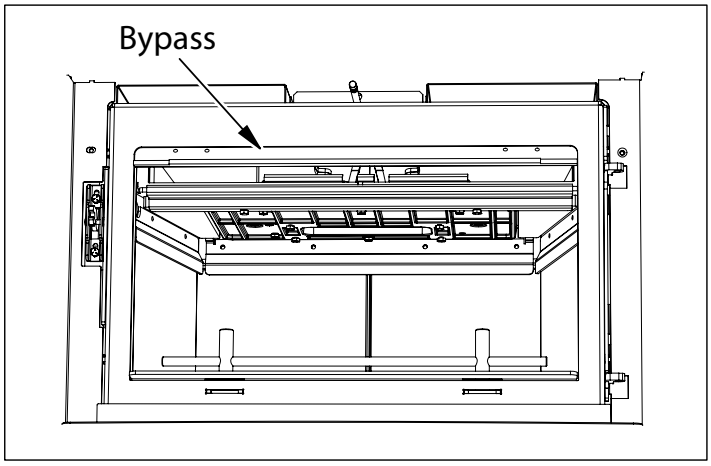

TO REPLACE THE COMBUSTOR:

First clean the combustor area and the area around the by-pass,use a vacuum cleaner.

Lift the new combustor into position, with the stainless flanges on each end facing forward.
The combustor should slide easily into position, you may need to pinch down the top center with your finger to start, gently push as far to the back of the stove as possible.

Replace the flame shield in the orientation shown below.

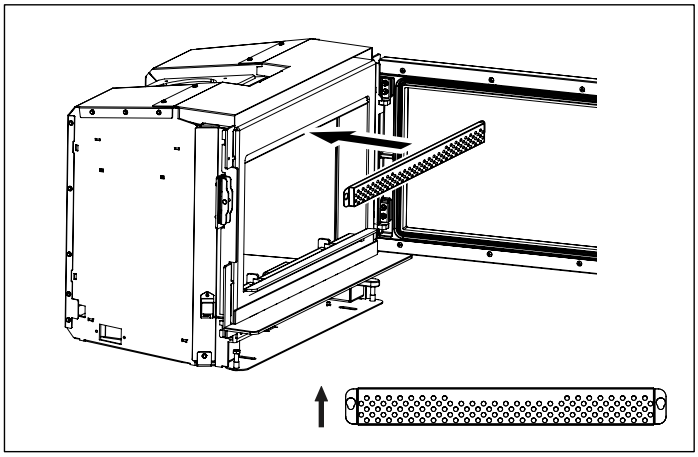

Lift it into position, place the key slot opening over the bolt and push the flame shield down to seat. Tighten the bolt till its SNUG only, do not over tighten. The flame shield should rest at an angle (about 45 degrees) with the thin end at the bottom and the thick end near the top of the stove.

NOTE: Replacement combustors can be retrieved from Applied Ceramics or Contact your local Regency Dealer for details.

DO NOT OPERATE THE APPLIANCE IF COMBUSTOR BECOMES INACTIVE - DO NOT OPERATE WITHOUT COMBUSTOR.

Bypass Door Gasket Replacement

1. Remove bypass rod - turn counter clockwise**.**

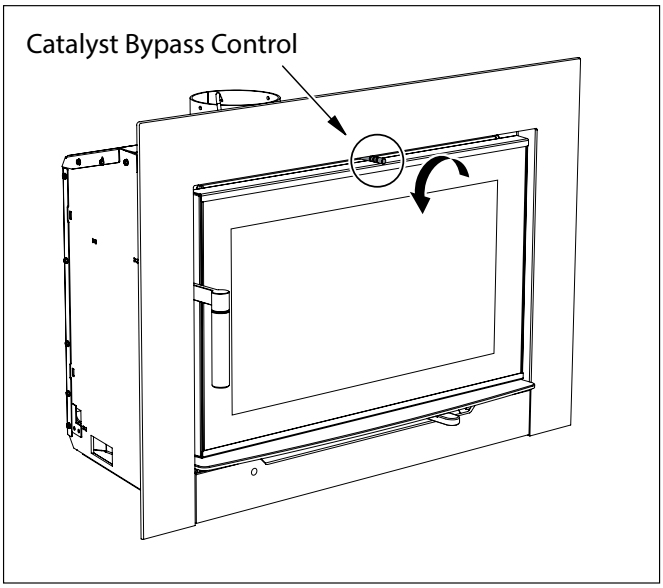

2. The following parts must be removed to allow access and a positive connection.

a) Combustor Flame Shield
b) Combustor
c) Upper Shield

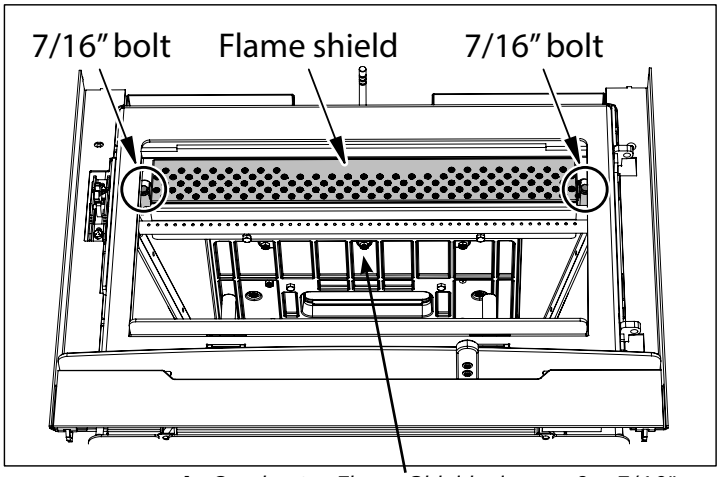

A- *Combustor Flame Shield - loosen 2 x 7/16" bolts to remove.*

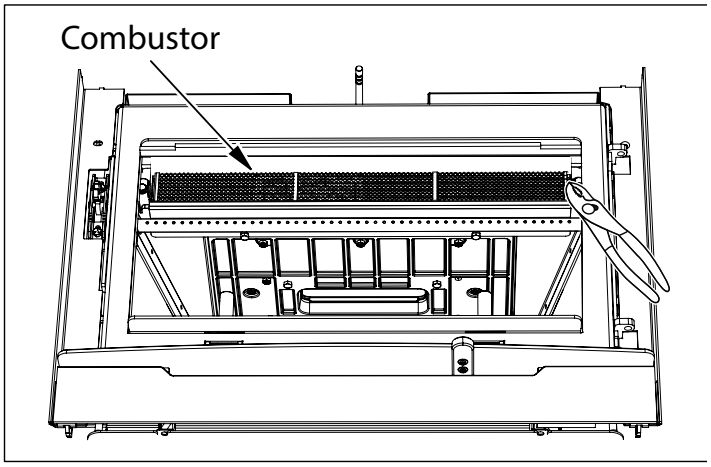

B- *Combustor- remove with pliers*
Tilt down and forward to ease removal.

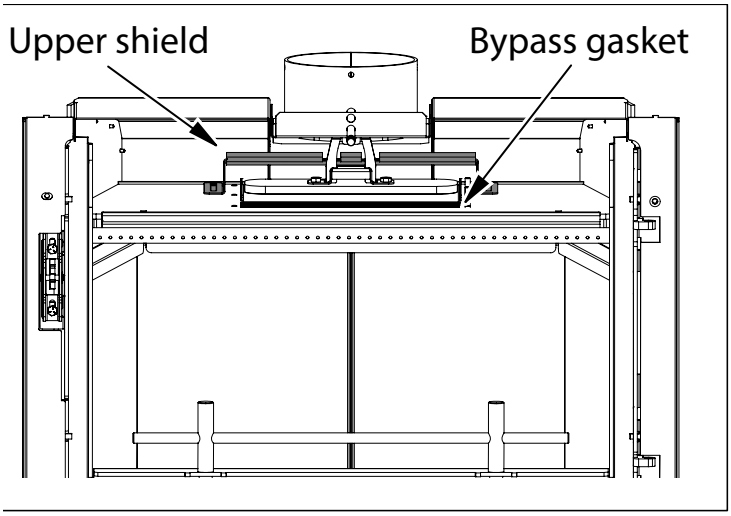

C- *Upper Shield - slide forward and lift up to remove.*

3. Lift off bypass plate, remove bypass gasket and replace with a new one.

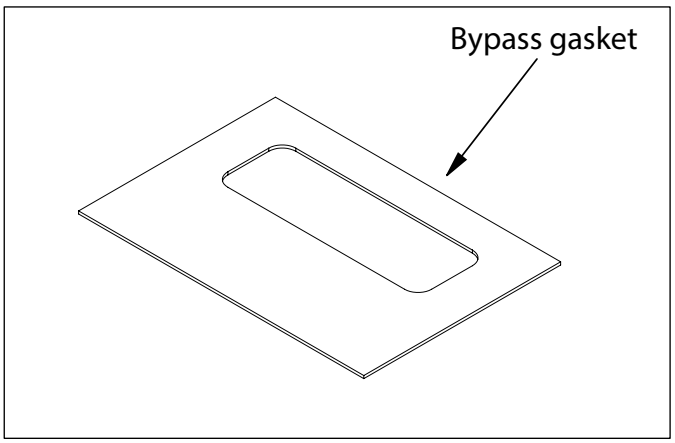

4. Reinstall bypass plate.

5. Reinstall the Upper Shield removed in Step 2c.
Ensure Upper Shield is centered in between 2 (two) vertical pins from front to back.
When positioning the upper shield locate the vertical pins by feel.
When the shield parts are in place - slide to the back.

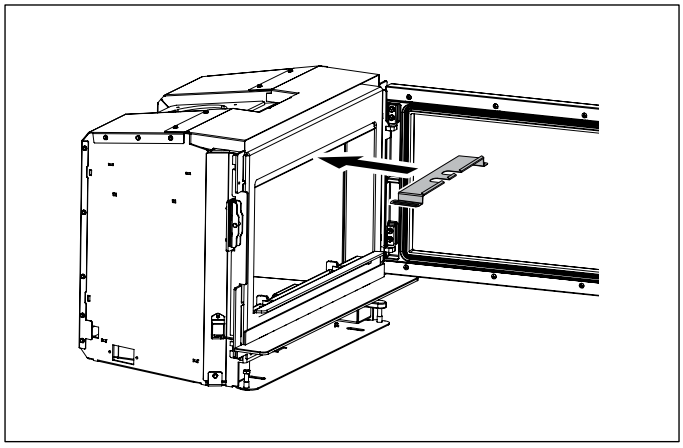

A- *Upper Shield - orientation for reinstall*

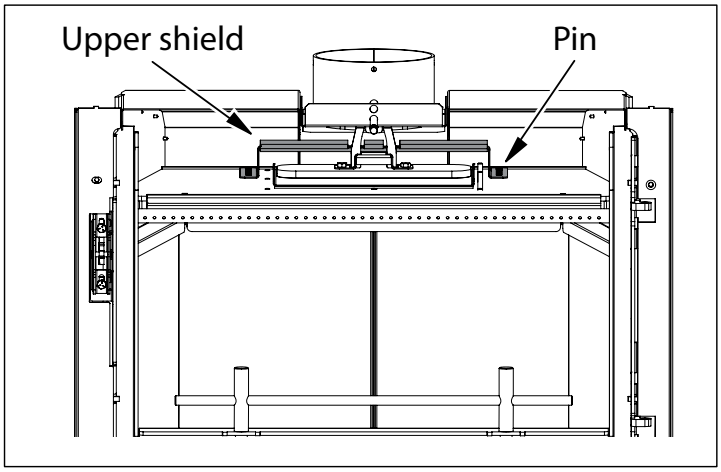

B- *Upper Shield - center between 2 vertical pins*

6. Reinstall Combustor and Flame Combustor Shield.

Cleaning & Maintaining Your Wood Stove

Glass Cleaning

Only clean your glass window when it is cool. Your local retailer can supply you with special glass cleaner if plain water and a soft cloth does not remove all deposits. Regular cleaning will prevent the build up of carbon and allow full view of fire.

CAUTION: Do not build fire too close to glass window.
WARNING: Do not use abrasive cleaners.
WARNING: Do not clean glass when hot.
WARNING: Do not operate unit with broken glass

Glass Replacement

Your Regency Insert is supplied with 5mm Neoceram ceramic glass (Part #940-528/P for the rectangular door glass or 920-529/P for the arched door glass) that will withstand the highest heat that your unit will produce. In the event that you break your glass by impact - purchase your replacement from an authorized Regency dealer only, and follow our step-by-step instructions.

WARNING: Do not use substitute materials.

Door Removal

The i3000A/i3000R door can be removed if required. Follow the steps below. Door installation is the reverse order.

1. Open door to fully open position.

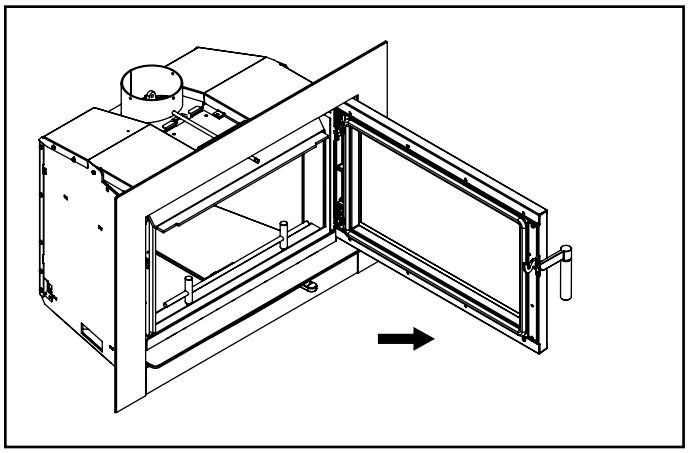

2. Lift door vertically in a straight line to disengage the hinge pins.
Caution: the door is heavy.

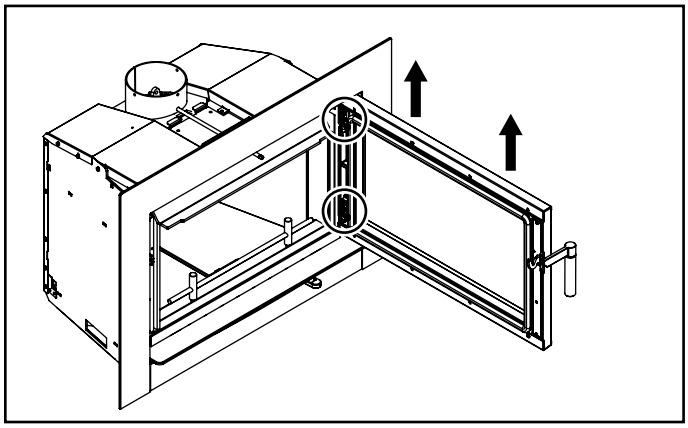

3. Remove door and place in a safe place.

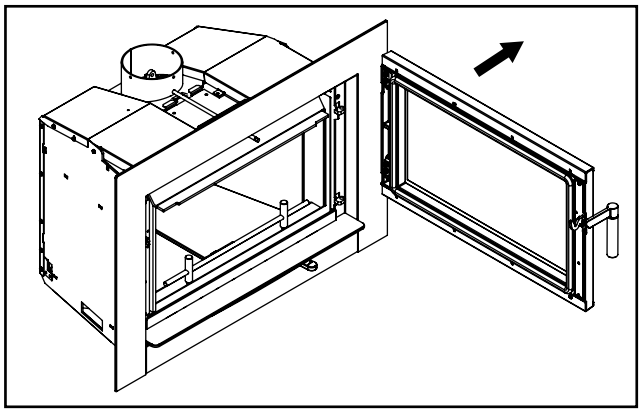

Glass Removal

Allow the stove to cool before removing or replacing glass. Remove the door from the insert and remove the glass retainer. Use caution when removing broken glass to prevent injury.

When placing the replacement glass in the door, make sure the glass gasket will properly seal your unit. Replace the retainer and tighten securely, but do not wrench down on the glass as this may cause breakage. Do not substitute materials. If your glass door does break, do not continue to use your unit until it has been replaced.

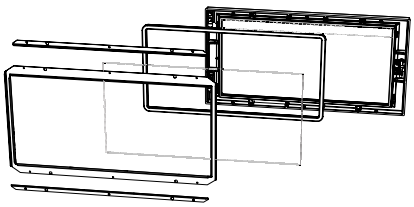

WARNING: Avoid impact on glass doors such as striking or slamming shut.

Maintenance

It is very important to maintain your fireplace stove, burning seasoned wood and maintaining a clean stove and chimney system. Have the chimney cleaned before the burning season and as necessary during the season, as creosote deposits may build up rapidly. Moving parts of your stove require no lubrication.

Door Installation

Follow the steps below for door installation.

CAUTION: Door is very heavy

1. Hold the door from the inside top left and outside bottom right edges. Position the door in front of the firebox as if it were slightly open, with the pins positioned higher than the tabs on the receiving bracket. Maintain a small gap between the top of the door and the inside of the faceplate. Protect this edge with tape to prevent any damage to the door or faceplate edges.

2. Position the door 8" open, move inward, keep the vertical edge parallel to the opening, and rest the hinge pins onto the hinge tabs on the unit.

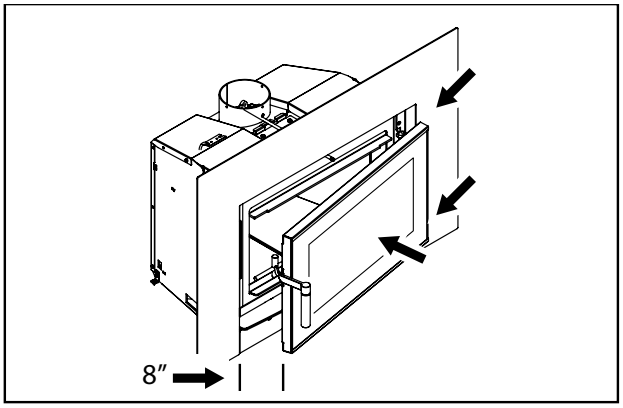

3. Slowly rotate the door out wider, align hinges over the pins and lower the pins into the hinge tabs. Rocking the door can help align the pins.

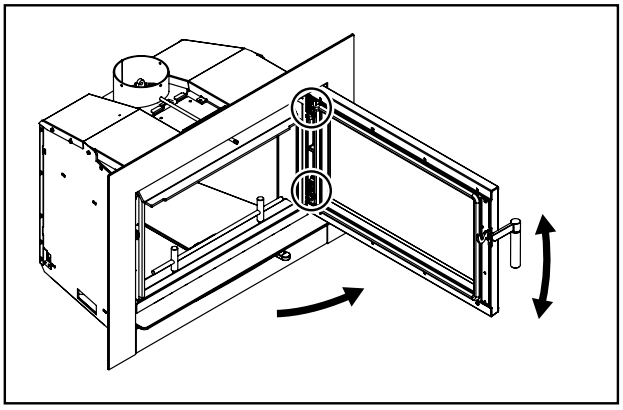

4.Close the door slowly, ensuring the pins are located properly.

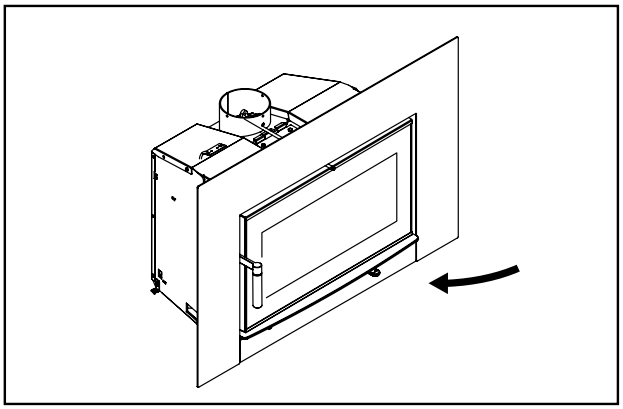

Annual Maintenance	
Completely clean out entire unit	Annually
Inspect air tubes, baffles and bricks	Replace any damaged parts.
Adjust door catch / latch	If unable to obtain a tight seal on the door - replace door gasket seal. Readjust latch after new gasket installed.
Inspect condition and seal of: Glass Gasket Door Gasket Bypass Door Gasket	Perform paper test - replace gasket if required
Paper Test	Test the seal on the loading door and bypass door with a paper bill. Place a paper bill in the gasketed area of the door on a cold stove–close the door. Try to remove the paper by pulling. The paper should not pull out easily; if it does, try adjusting the door latch (loading door only). If that doesn't solve the problem, replace the door gasket, bypass gasket, or both.
Check and lubricate door hinge + latch	Use only high temperature anti seize lube. (ie. never seize)
Check glass for cracks	Replace if required.
Clean blower motor	Disconnect power supply. Remove and clean blower. ***DO NOT LUBRICATE***
Inspect and clean chimney	Annual professional chimney cleaning recommended.
Thermostat Probe	The thermostat probe that is inserted into the opening above the insert must be cleaned at least once a year. Use 220 sand paper to clean probe. Access to the probe can be done in 2 ways. - by removing the catalyst as this will be exposed once the catalyst is removed. - by removing the faceplate. However, there must be clearance above the insert to be able to remove the probe from the top of the insert. See specific details in this manual.

NOTE: Chimney Cleaning

When cleaning the chimney system, the catalytic combustor should be removed so this can also be cleaned at the same time following the guide lines found in this manual.

The bypass should be moved all the way outward so any creosote will fall onto the firebox floor when being cleaned.

We highly recommend that the chimney cleaning be done by a professional as they will have the necessary tools such as a proper sized brush and special vacuum cleaner designed to deal with fine particles.

IMPORTANT:

Before attempting to loosen or remove any screw, bolt from the interior of a wood stove, insert or factory built fireplace that has had a fire burned in it, we highly recommend to liberally spray the screw/bolt with a good-quality penetrating oil, one that does not have flammable properties contained within the penetrating oil being used. Allow it to set, then tap or vibrate the screw or bolt to help loosen it before attempting to remove it. For best results, follow the instructions that are provided with the penetrating oil.

Secondary Air Tube Removal / Installation

1. Allow the stove to burn out and cool down, until cool to touch.

2. Open stove door to access secondary air tube.

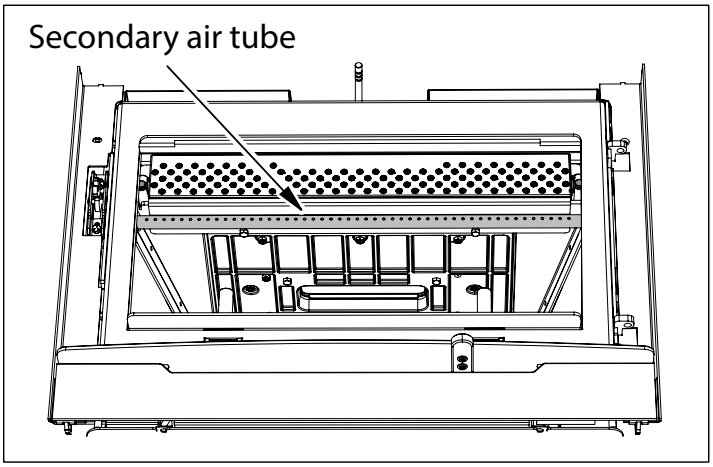

3. Grasp secondary air tube firmly with vise grips, using a hammer tap vise grips from right to left until air tube is released from grip.

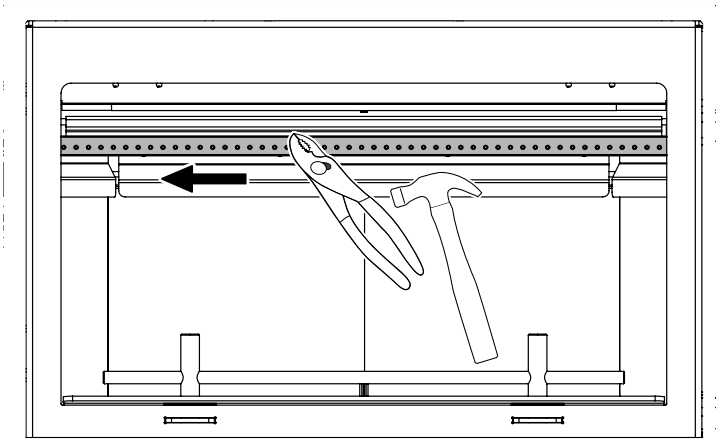

4. To reinstall or replace, first slide left side of tube into hole on left side air channel. Align tab on right side air channel with notch on right hand end of air tube. Firmly grip center of air tube with vise grips, use hammer to tap vise grips from left to right until the tube bottoms out into the air channel on right.

NOTE	If air tube is locked into place correctly there should be slight movement when moving the air tube back and forth.

Cast Bypass Top Plate Removal / Installation

1. Allow the stove to burn out and cool down, until cool to touch.

2. Open stove door to access secondary air tube.

3. Remove secondary air tube–(see previous page).

4. 8 bolts secure the cast bypass top plate to the roof of the stove.
   Before removing the bolts securing the cast bypass - support the cast up with 2 X 12-1/4" 2 x 4 's. The cast bypass opening weighs 30lbs - **DO NOT REMOVE** the bolts on the cast bypass prior to supporting the weight to avoid damage and injury.

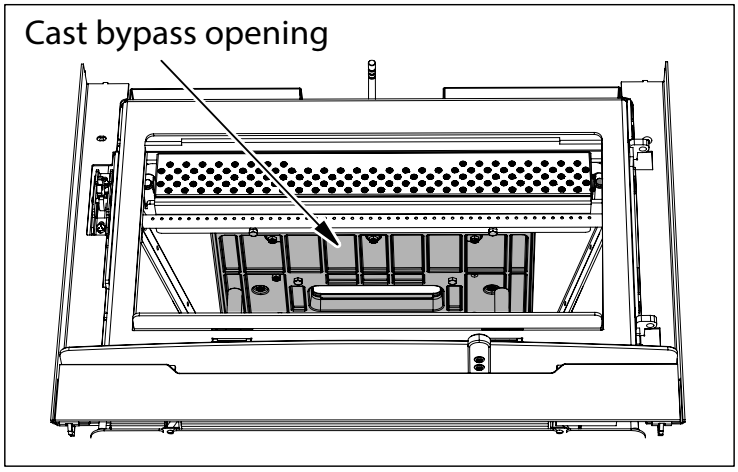

View of inside top of stove

5. Remove the cast bypass opening top plate and replace.

6. Reverse steps to reinstall.

Fan Operation Into Auto Mode

If fan will not come on in auto mode see the following possible causes and solutions:

Possible causes:
- Bypass damper is open
- Brand new unit or first burn of the season
- No ember bed established (embers or coals, not to be mistaken with ashes)
- Primary damper is set to low (all the way to the left)
- There are only a couple small logs on fire or fire is almost out
- Mechanical issues or defects

Solutions:
- Close bypass once unit is at optimum temperature
- Establish a two inch ember bed
- Set damper between medium to high (middle or all the way to the right)
- Add a few more logs onto the fire
- See your authorized dealer

NOTE: The temperature displayed on the catalyst monitor has nothing to do with the activation temperature in auto for the fan.

The automatic sensor for this appliance is located at the firebox base. If the temperature at this location is not met, the fan will not come on. It is crucial on this appliance to get this up to operating temperature so that the catalyst is activated and bypass may be closed to retain heat within the firebox.

Sweeping the Flue From the Top Down

Note: The chimney system on this appliance cannot be cleaned from below.
IMPORTANT: It is imperative that the area around the exterior of the fireplace insert is protected with blankets, drop clothes to prevent any creosote, ash from falling on the finished floor.

1. Remove the combustor flame shield.

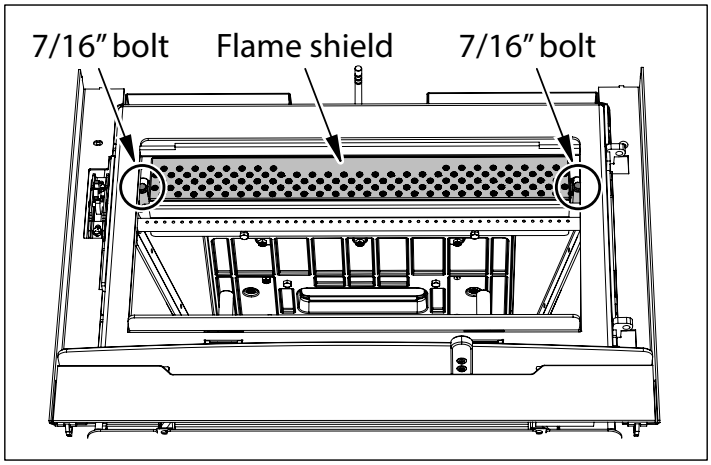

Combustor Flame Shield - loosen 2 x 7/16" bolts to remove.

2. Remove the catalyst combustor.

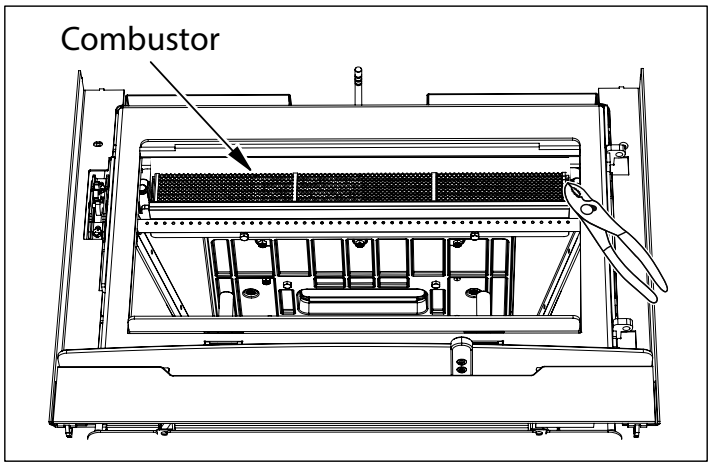

Combustor - remove with pliers tilt down and forward to ease removal.

4. Close the door of the insert and open the bypass rod fully and sweep the flue from the top of the chimney down into the bypass area.

5. After allowing the debris to settle slowly open the door to prevent spillage. Using and ash vacuum and extensions clean the area behind the catalyst combustor and bypass area.

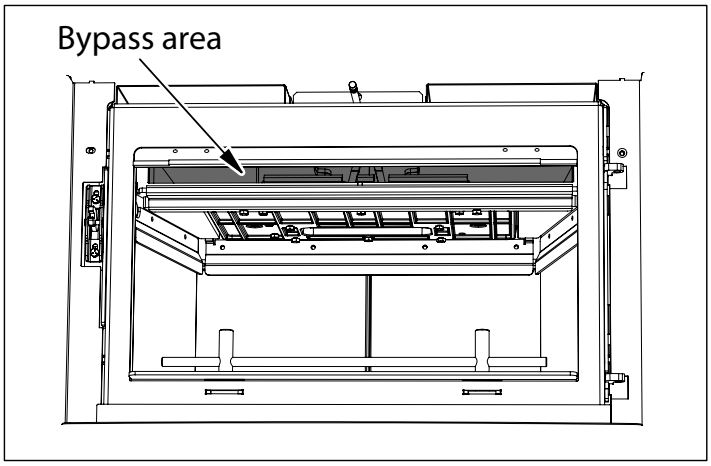

6. Check that the bypass is moving freely after cleaning the area. Do additional cleaning and make adjustments as needed.

7. Reverse steps 1-2 to reinstall the combustor and combustor flame shield.

Door Gasket

If the door gasket requires replacement, 7/8" diameter material must be used. A high temperature gasket adhesive is required. A gasket repair kit, (part #846-570) is available from your local dealer.

Glass Cleaning

Clean your glass window when it is cool. Your local retailer can supply you with special glass cleaner if plain water and a soft cloth does not remove all deposits.

Handle Replacement

1. Remove the seven screws on the right side of the door; the panel should lift off.

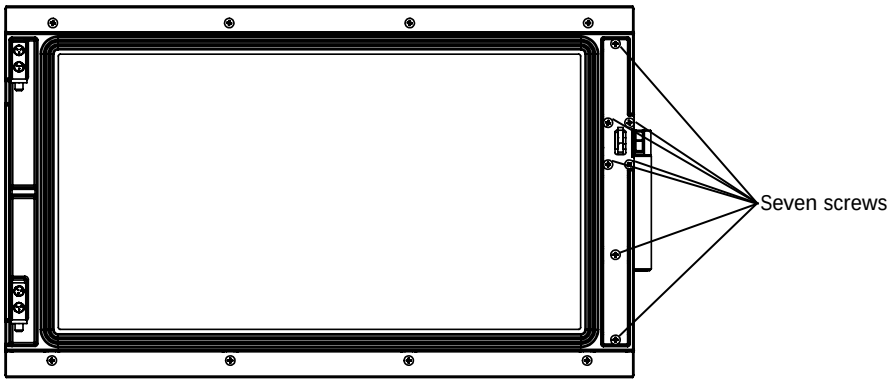

2. Place the new door handle in position and reattach the panel using the seven screws that were removed.

3. The handle can be removed by undoing the bolt at the bottom.

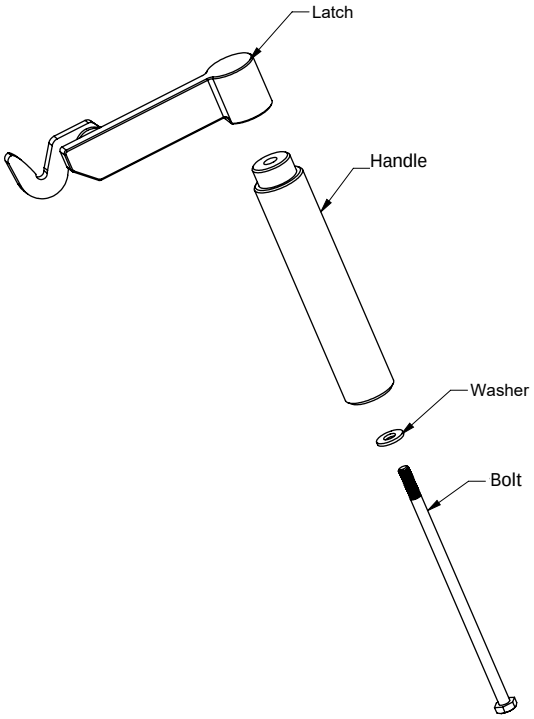

Door Latch Maintenance

The door latch or door alignment may require adjustment as the door gasket material compresses after a few fires. Removal of spacers will move the latch closer to the door frame, creating a tighter seal and the ability to raise or lower the latch assembly.

1. Raise or lower the latch by loosening the inner two 7/16" bolts. Adjust to the desired location and retighten the bolts. Make sure the door catch closes freely and makes a good seal. Do a paper test to confirm the seal.

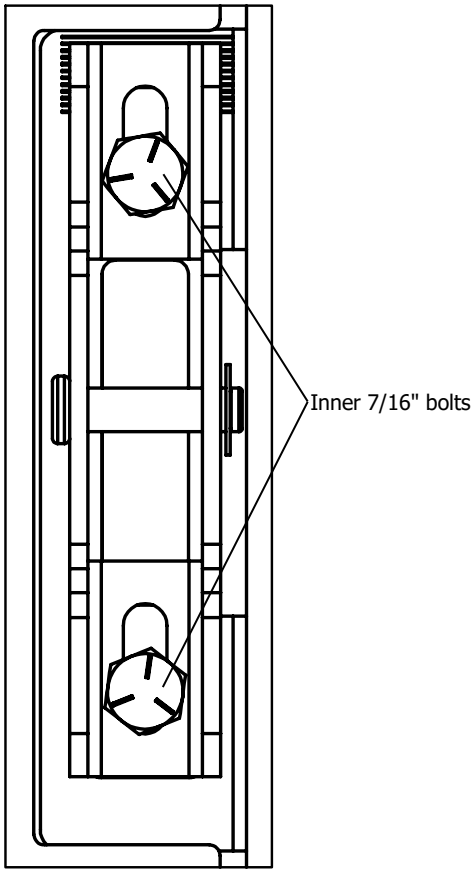

2. To remove a shim, loosen the two bolts to create clearance behind the catch. Place a screwdriver in the slot of the shim and slide out. Retighten the bolts.

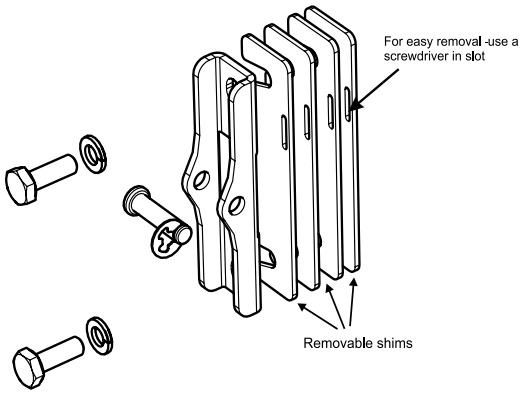

Glass Removal

1. To remove the glass, remove the eight retainer screws (4 top & 4 bottom) and slide the retainers off.

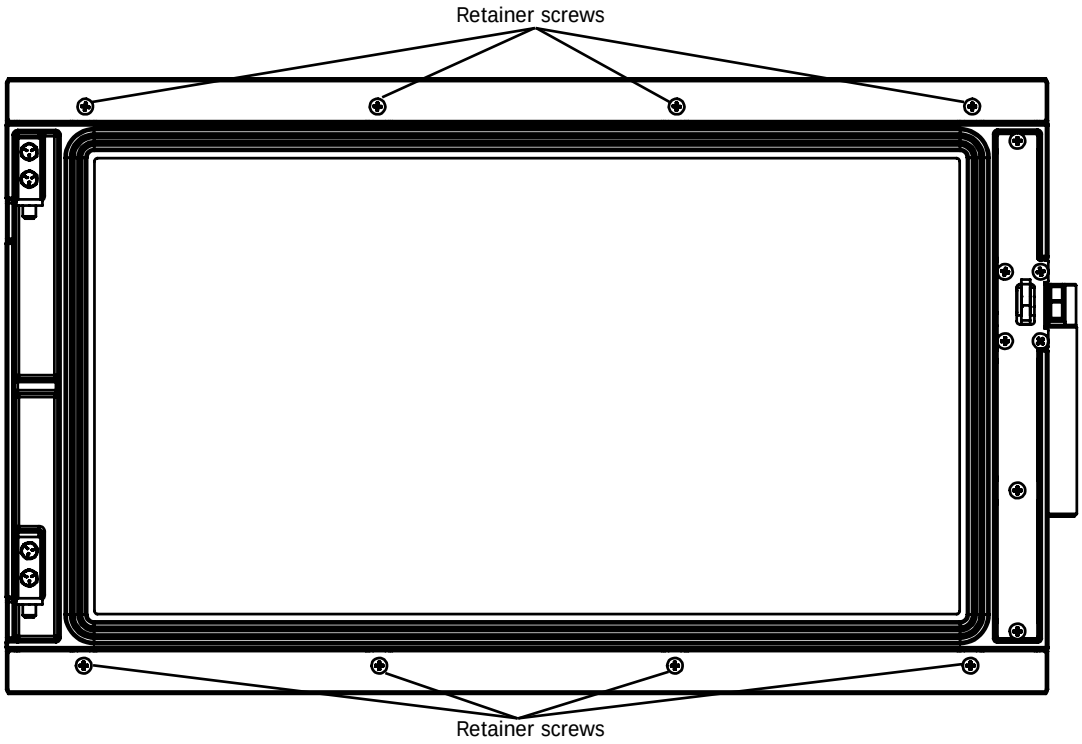

2. Carefully lift the door up and remove the glass.
3. Place the new piece of glass under the door.
4. Carefully slide the glass retainers back onto the door.
5. Re-install the eight retainer screws removed in step 1.

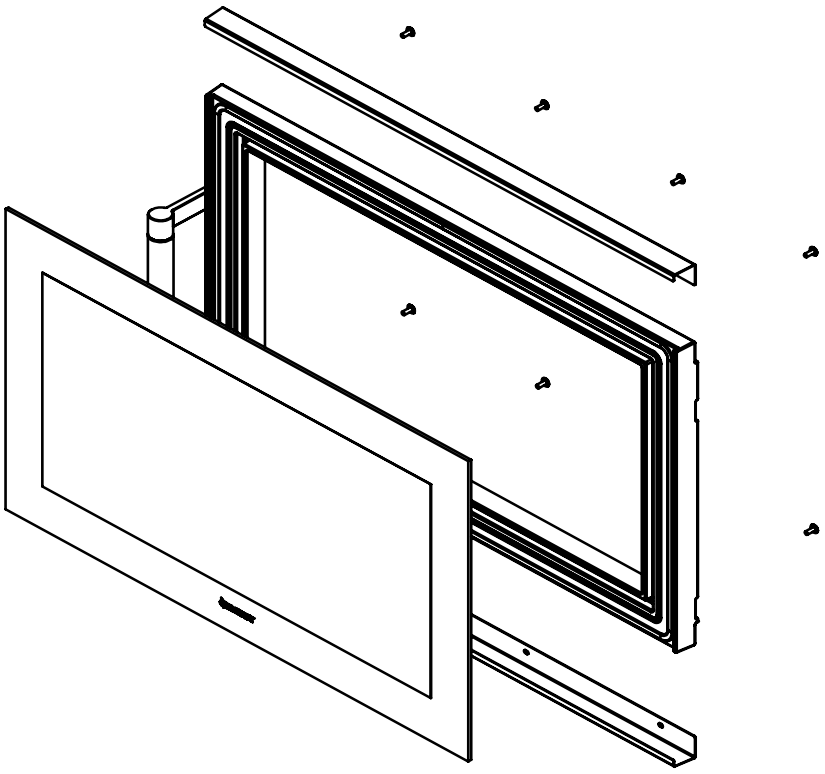

Door Adjustment

The door can be adjusted by loosening the four 7/16" screws (shown in the image below).

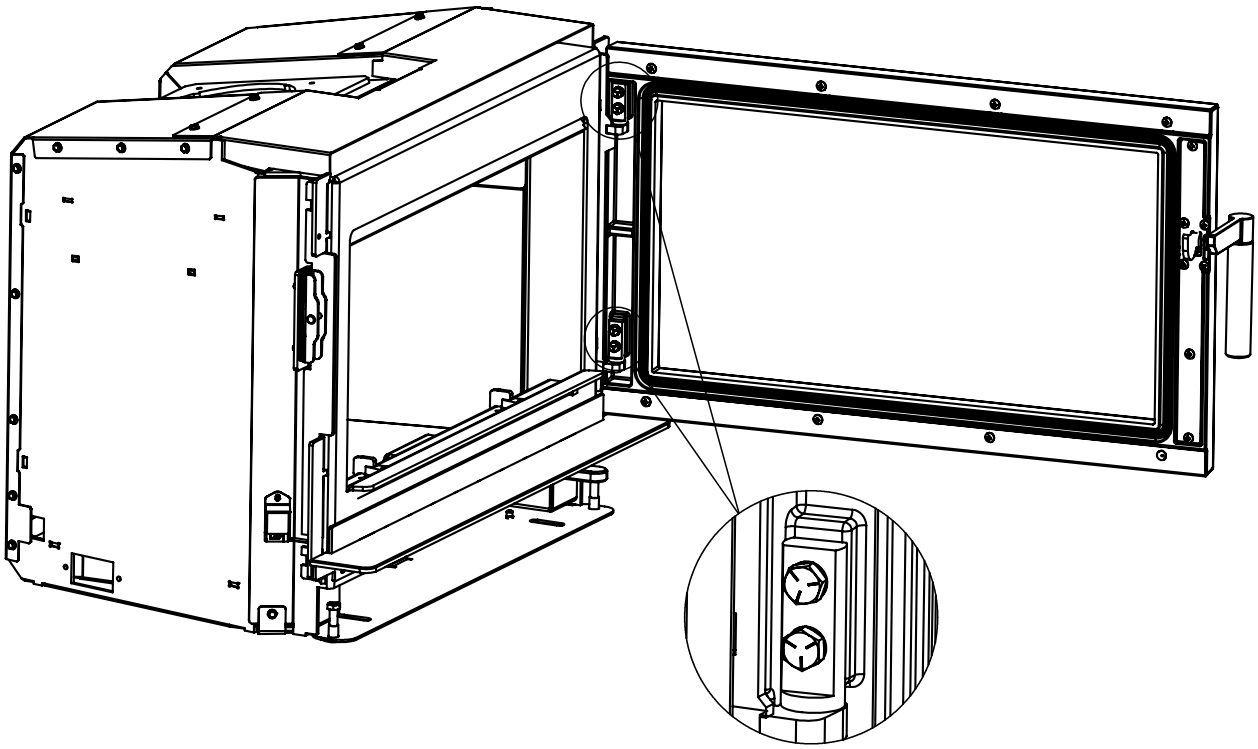

1. Lift the door upwards and tighten the bolts to raise the door.
2. Push the door downwards and tighten the bolts to lower the door.

Main Assembly & Options - i3000A/i3000R

ITEM	PART #	DESCRIPTION
1	166-558	Andiron Assembly
2	106-351	Cast Horizontal Baffle
3	166-163	Flame Shield
4	166-077	Rectangular Door Retainer
5	166-518	Door Latch Assembly (Does not include handle)
6	166-385	Door Handle
7	940-528/P	Rectangular Door Glass
8	166-219	Latch Cover Plate
N/S	166-220	Latch Cover Plate Reinforcement
9	166-060	Right Bracket Holder
10	904-586	Fan Control Knob
11	910-330	Fan Speed Controller
12	910-142	Fan Thermodisc (110ºF)
13	166-917	Fan Assembly (Complete Kit)
14	948-183	Hinge Pin (Each)
15	166-034	Fan Shield
16	911-334/P	Replacement Fan Motor
17	166-040	Draft Handle
18	166-292	Lever Draft Arm
19	166-047	Obround 4 Pilot
21	166-522	Door Catch Assembly
22	166-953	Secondary Air Large Tube
23	166-071	Fan Heat Shield
24	166-543	Catalyst Combustor Assy Metal 50 Cell
25	940-529/P	Arched Door Glass
26	166-266	Arched Retainer
27	166-532/P	Ash Lip
28	166-519	Arched Door Assembly
29	166-520	Rectangular Door Assembly
30	166-085	Firebox Floor - Lytherm Sheet
N/S	166-038	Right Brick Retainer
N/S	166-036	Left Brick Retainer
N/S	166-037	Rear Brick Retainer
31	166-291	Door Hinge Bracket
32	166-512	Flue Collar Assembly (i3000R)
32	166-654	Flue Collar Assembly (i3000A)
33	106-018	Bypass Gasket
34	166-098	Bypass Slide
35	166-092	Bypass Threaded Fork Connector
36	106-060	Bypass Flame Shield
37	166-372	Bypass Rod
38	846-570	Arched Door Gasket Kit
39	846-570	Rectangular Door Gasket Kit
40	846-686	Arched Glass Gasket
41	846-686	Rectangular Glass Gasket
42	911-186	Catalyst Temperature Monitor Probe
43	911-425	Catalyst Temperature Monitor
44	911-185	Digital Catalyst Temperature Monitor (Optional)
45	166-396-SBK	Bypass Tool
N/S	166-180	Andiron Holder (Each)
N/S	166-146F	Door Catch Shims (4 per Unit) (Each)
N/S	166-160F	Baffle Edge Guard

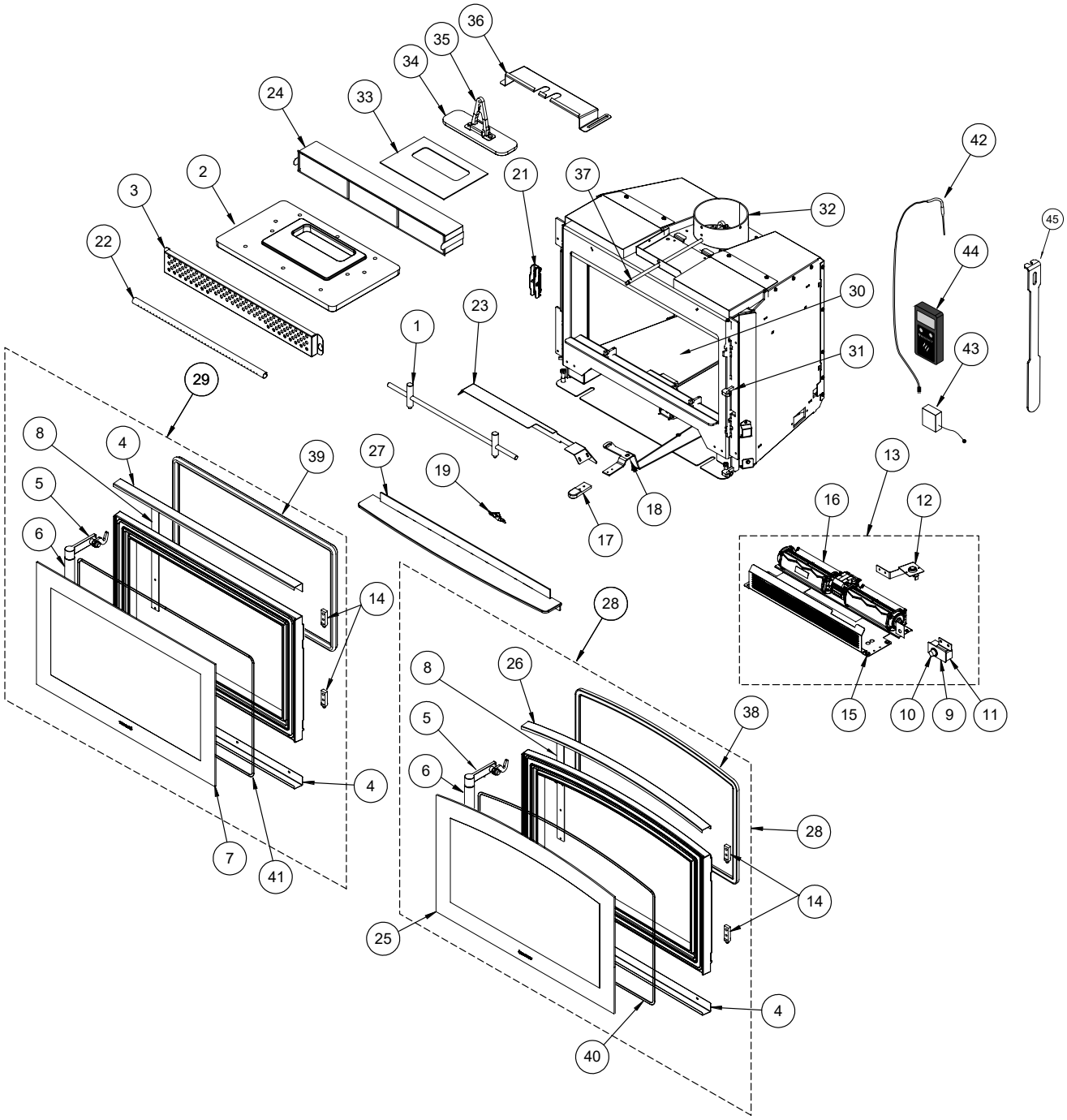
36
35
34
24
33
42
2
21
37
3
32
45
22
44
30
23
1
31
43
29
8
4
39
27
13
5
19
16
12
6
18
17
14
28
8
26
38
15
10
9
11
5
6
4
28
7
41
14
25
4
40

Brick Panels (Part #166-960)

ITEM	PART #	DESCRIPTION
1	166-301/P	Bottom Left Refractory Brick
2	166-302/P	Bottom Right Refractory Brick
3	166-303/P	Rear Refractory Brick (Each)
4	166-304/P	Right Refractory Brick
5	166-305/P	Left Refractory Brick

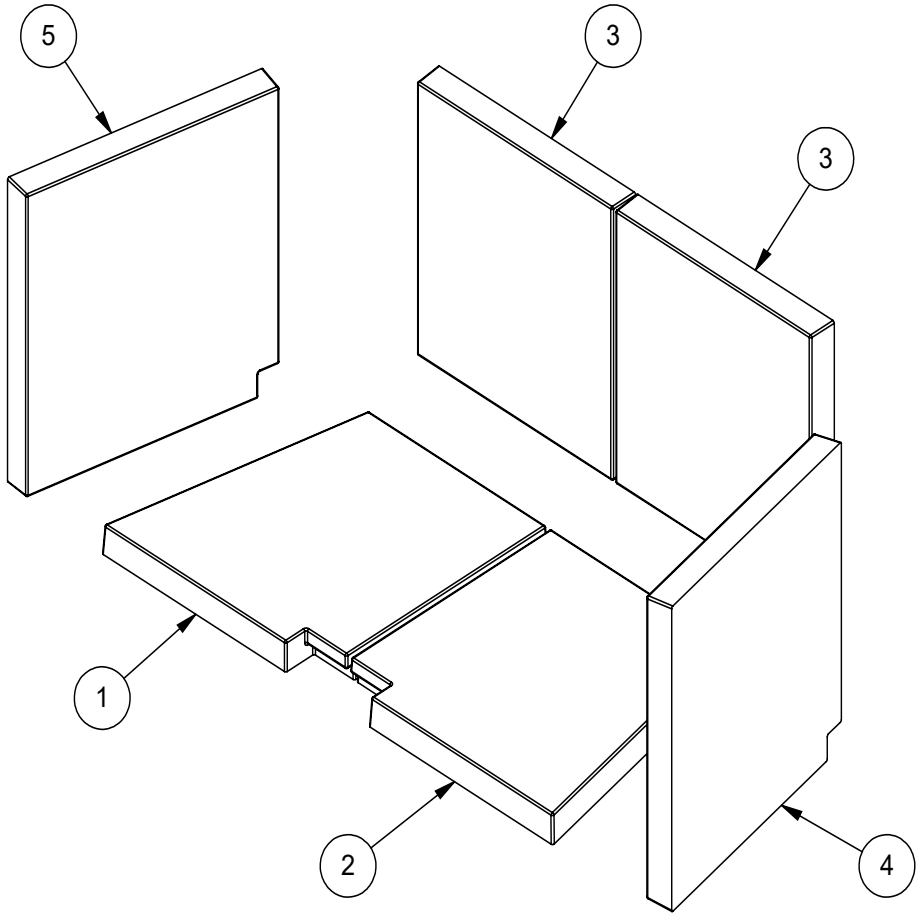

Faceplates and Surrounds

ITEM	PART #	DESCRIPTION
1	166-910	Faceplate - Contemporary
2	166-914	Faceplate - Arched
3*	166-912	Faceplate - Classic
4	166-911	Faceplate - Oversize Contemporary
5	166-913	Faceplate - Oversize Classic
6*	391-927 391-928	Traditional Extruded Surround - Black Traditional Extruded Surround - Brushed Antique Copper
7	391-920 391-921 391-922 391-923 391-924	Premium Faceplate Surround - Black Premium Faceplate Surround - Grey Premium Faceplate Surround - White Premium Faceplate Surround - Sunset Bronze Premium Faceplate Surround - Brushed Nickel
8	166-937	Faceplate - 3 Sided Custom

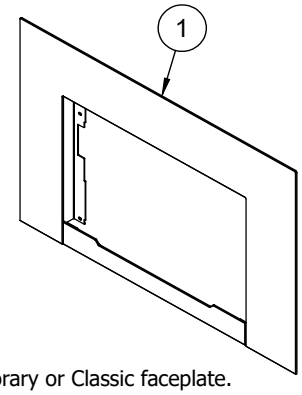

*Note: The traditional extruded surround and premium faceplate surround will only fit on the Contemporary or Classic faceplate.

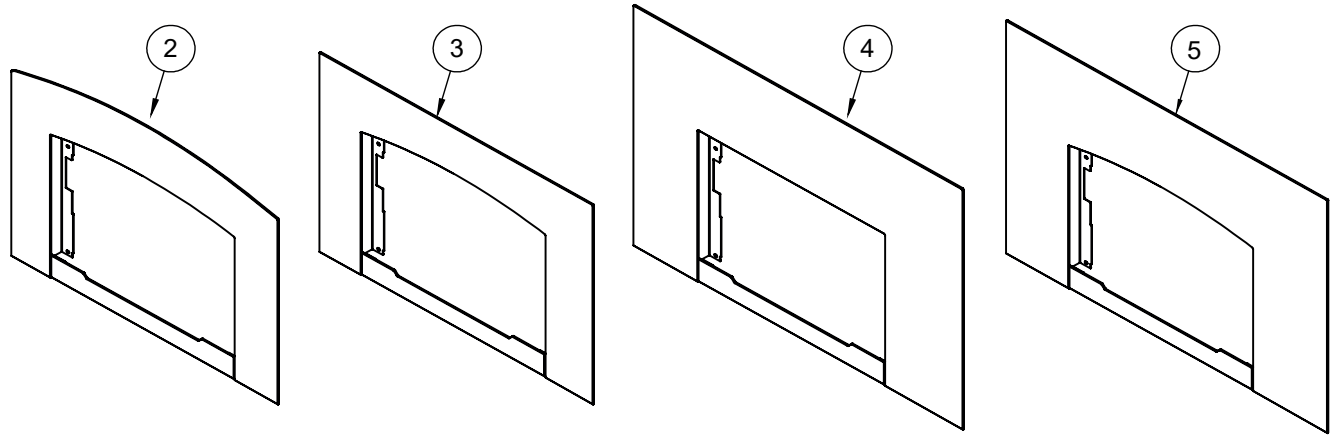

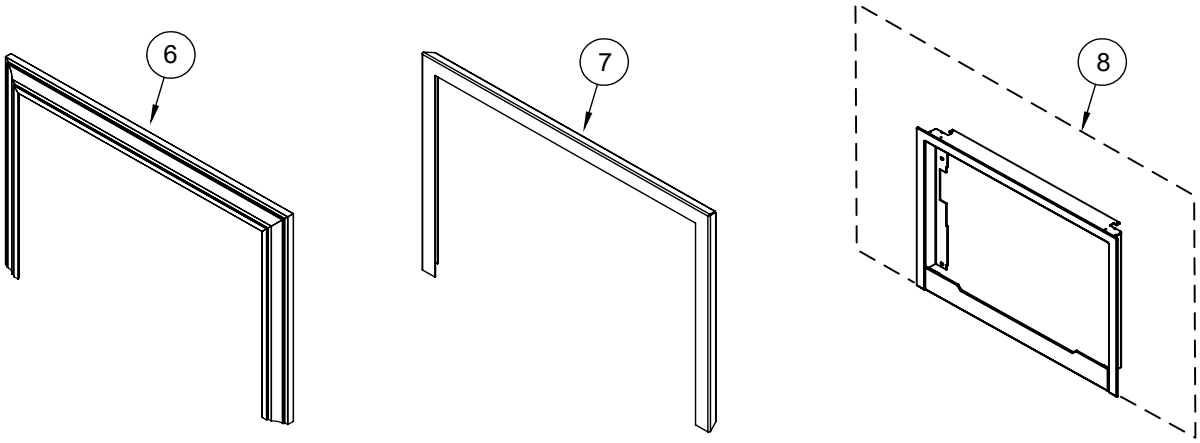

Hampton Faceplate

ITEM	PART #	DESCRIPTION
1	N/A	i3000A/i3000R Top Casting Plate
2	N/A	i3000A/i3000R Left Side Casting
3	N/A	i3000A/i3000R Right Side Casting
4	N/A	i3000A/i3000R Fan Cover Casting
5	166-354	Left Side Casting Bracket
6	166-355	Right Side Casting Bracket
7	166-356	Top Side Mounting
8	166-357	Alignment Bracket
9	166-358	Top Casting Bracket
10	166-359	Left Fan Cover Bracket
11	166-360	Right Fan Cover Bracket
12	910-330	Fan Speed Controller
13	904-586	Fan Speed Controller Knob
14	166-921	Complete Casting Assembly - Black
14	166-925	Complete Casting Assembly - Brown

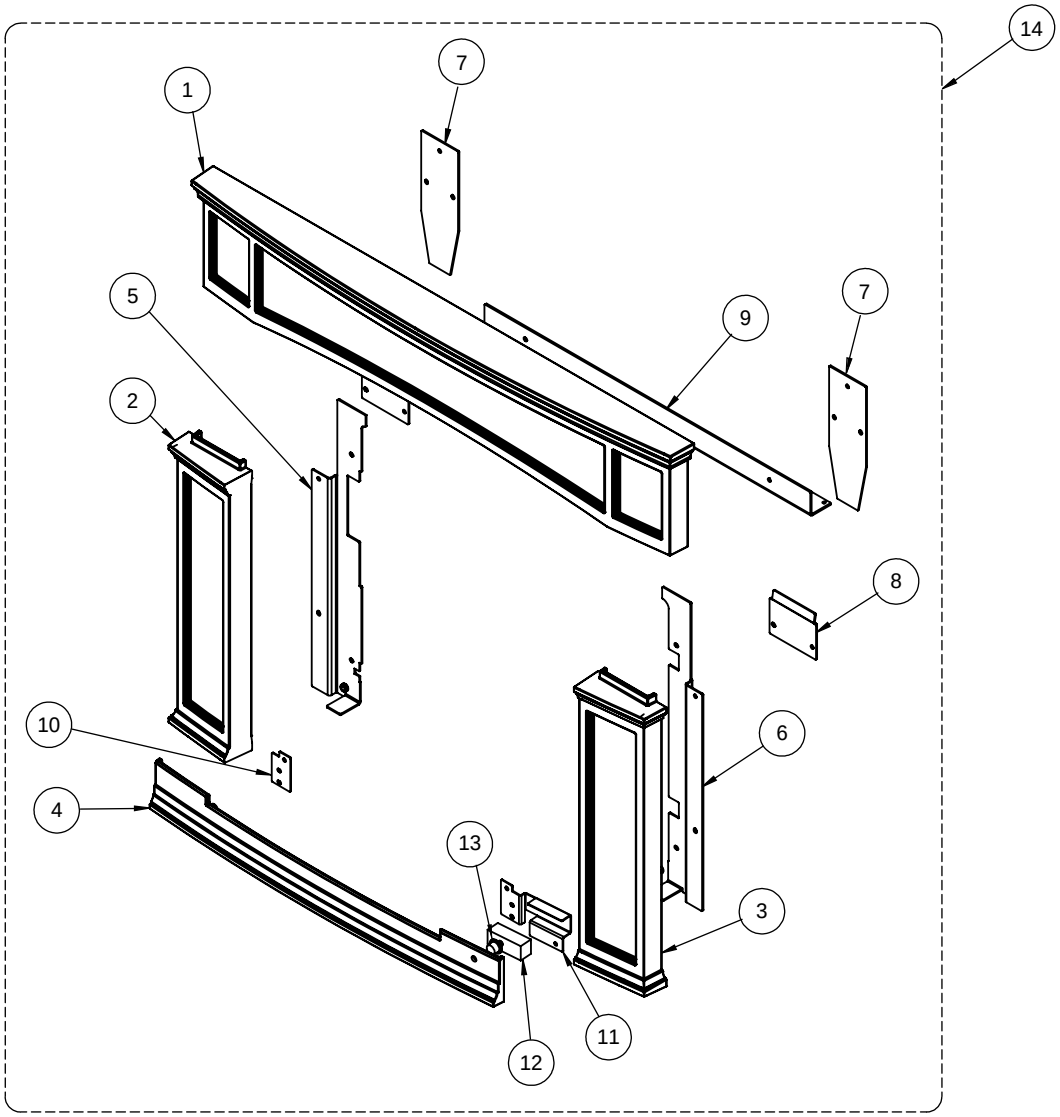

Indoor Wood Product Warranty

Limited Lifetime Warranty

FPI Fireplace Products International Ltd. (for Canadian customers) and Fireplace Products U S, Inc. (for US customers) (collectively referred to herein as "FPI") extends this Limited Lifetime Warranty to the original purchaser of this Appliance provided the product remains in the original place of installation. The items covered by this Limited Lifetime Warranty and the period of such coverage are set forth in the table below.

An Appliance in this policy is defined as an Indoor wood insert or Indoor wood freestanding stove.
This Appliance has only been certified and listed for use indoors.

Note: This Wood Product Warranty does not apply to the Ri50 & CF780 models. See Ri50/CF780 policy for specific warranty details.

This Limited Lifetime Warranty starts on the day the Appliance was purchased.
The Limited Lifetime Warranty is not transferable, amendable or negotiable under any circumstances.

Indoor Wood Products	**Component Coverage**					**Subsidized Labor Coverage*** **
Components Covered	**Limited Lifetime**	**5 years**	**2 years**	**1 year**	**Warranty**	**(Years)**
Welded Firebox Steel	✓					5
All Stainless Steel Components, Smoke Deflectors, Heat Shields etc.	✓					3
Air Tubes	✓					3
Airmate	✓					3
Door handle and latch assembly, all hardware	✓					3
Glass Thermal Breakage Only	✓					3
Steel Faceplates, Accessory Housings	✓					3
All Plating	✓					3
Ash Drawer, Heatshields, Pedestal	✓					0
All Baffles, Steel, Ceramic, Vermiculite C-Baffles	✓					0
All castings, firebox, surrounds, doors, panels etc.		✓				3
All Electrical, Blower, wiring, switches, Catalytic Monitors, Probes, etc.			✓			2
Glass - Crazing				✓		1
Catalyst Combustor					**10 Years Prorated	0
Venting/Chimney				✓		1
Screens				✓		1

**See specific warranty details regarding the catalyst combustor in this manual.

Note: Warranty coverage noted above may not be applicable as components/options vary based on appliance purchased.

Conditions:

Warranty protects against defect in manufacture or FPI factory-assembled components only, unless herein specified otherwise.

*****This warranty does not cover dealer travel costs, mileage, fuel, tolls for diagnostic or service work. All labor rates paid to authorized dealers are subsidized, pre-determined rates. Dealers may charge you for travel and additional time beyond their subsidy.**

Any part(s) found to be defective during the warranty period as outlined above will be repaired or replaced at FPI's option through an accredited distributor, dealer or pre-approved and assigned agent provided that the defective part is returned to the distributor, dealer or agent for inspection if requested by FPI. Alternatively, FPI may, at its own discretion, fully discharge all of its obligations under warranty by refunding the verified purchase price of the product to the original purchaser. The purchase price must be confirmed by the original Bill of Sale.

The authorized selling dealer, or an alternative authorized FPI dealer if pre-approved by FPI, is responsible for all in-field diagnosis and service work related to all warranty claims. FPI is not responsible for results or costs of workmanship of unauthorized FPI dealers or agents in the negligence of their service work.

At all times, FPI reserves the right to inspect reported in the field/on location complaints of products claimed to be defective before processing or authorizing any claim. Failure to allow this upon request will void the warranty.

All warranty claims must be submitted by the dealer servicing the claim, including a copy of the Bill of Sale (proof of purchase by you). All claims must be complete and provide full details as requested by FPI to receive consideration for evaluation. **Incomplete claims may be rejected.**

Replacement Appliances to the original purchaser are limited to one per warranty term. Air tube and baffle replacements are limited to one replacement per warranty term.

The Appliance must be installed according to all manufacturers' instructions as per the manual. All Local and National required codes must be met.

The installer is responsible for ensuring the Appliance is operating as designed at the time of installation.

The original purchaser is responsible for the annual maintenance of the Appliance, as outlined in the owner's manual. As outlined below, the warranty may be voided due to problems caused by a lack of maintenance.

Purchased parts: Repair/replacement parts purchased by the consumer from FPI after the original coverage has expired on the Appliance will carry a **90-day** warranty from the purchase date, valid with a receipt only. Any item shown to be defective will be repaired or replaced at our discretion. No labor coverage is included with these parts.

If freight damage has been found either externally or internally, the dealer must be informed within 3 days. All claims as a result of damage must be submitted by the dealer servicing the claim, including a copy of the Bill of Sale (proof of purchase). All claims must be complete and provide full details as requested by FPI to receive consideration for evaluation. **Incomplete claims may be rejected.**

As this is a Limited Lifetime Warranty, if the Appliance needs to be replaced, the Appliance that was purchased at the time of sale might not be replaced with exactly the same model Appliance. In that case, FPI will replace your Appliance with one that is similar at the time of replacement under the terms of this Limited Lifetime Warranty, but ONLY in the event that an item covered by the Limited Lifetime Warranty is found to be defective. Please refer to the table on first page of this warranty for items covered by the Limited Lifetime Warranty. Product changes might be the result of the original Appliance being discontinued, changes in regulatory requirements, product advancements, etc., which are beyond the control of FPI. **This Limited Lifetime Warranty does not cover any installation costs, or costs associated with changes of required clearances for the replacement Appliance, hearth pads, mantles, facing and/or facing materials such as framing, completed walls made of drywall, wood, non-combustible board, tile, brick, stone, marble etc., venting/chimney systems, or components of the chimney system.**

If a suitable replacement is not available, FPI will refund **50%** of the purchase price of the Appliance and any applicable FPI accessories (faceplates, brick panels, media, etc.) purchased at the time of sale. **In no event will FPI refund any portion of the purchase price of, or reimburse costs associated with, any other items, including without limitation, installation of a new unit, changes of required clearances for a new unit, hearth pads, mantles, facing and/or facing materials such as framing, completed walls made of drywall, wood, non-combustible board, tile, brick, stone, marble etc., venting/chimney systems, or components of the chimney system. A copy of the receipt or bill of sale will be necessary to validate the purchase price.**

Exclusions:

This Limited Lifetime Warranty does not extend to paint, rust or corrosion of any kind due to a lack of maintenance or improper venting, combustion air provision, corrosive chemicals (i.e. chlorine, salt, air, etc.), firebrick (rear, sides or bottom), door or glass gasketing, vermiculite floor bricks, andiron assemblies/flue damper rod or any other additional factory fitted gasketing, batteries.

Malfunction, damage or performance-based issues as a result of environmental conditions, location, chemical damages, downdrafts, installation error, an installation by an unqualified installer, incorrect chimney components (including but not limited to cap size or type), operator error, abuse, misuse, use of improper fuels (such as unseasoned cordwood, mill-ends, construction lumber or debris, off-cuts, treated or painted lumber, metal or foil, plastics, garbage, solvents, cardboard, coal or coal products, oil-based products, waxed cartons, compressed pre-manufactured logs, kiln dried wood), lack of regular maintenance and upkeep, acts of God, weather-related problems from hurricanes, tornados, earthquakes, floods, lightning strikes/bolts or acts of terrorism or war, which result in a malfunction of the Appliance are not covered under the terms of this Limited Lifetime Warranty.

FPI has no obligation to enhance or modify any Appliance once manufactured (i.e. as products evolve, field modifications or upgrades will not be performed on existing Appliances).

Any Appliance showing signs of neglect or misuse will not be covered under the terms of this warranty policy and may void this warranty, including Appliances with rusted or corroded fireboxes that have not been reported as rusted or corroded within **three (3)** months of installation/purchase.

Appliances which show evidence of being operated while damaged, or with problems known to the purchaser and causing further damages will void this warranty.

Appliances where the serial no. has been altered, deleted, removed or made illegible will void this warranty.

Minor movement, expansion and contraction of the steel is normal and is not covered under the terms of this warranty.

Freight damages for products or parts are not covered under the terms of the warranty.

Products made or provided by other manufacturers and used in conjunction with the FPI Appliance without prior authorization from FPI may void this warranty.

Limitations of Liability:
The original purchaser's exclusive remedy under this warranty, and FPI's sole obligation under this Limited Lifetime Warranty, express or implied, in contract or in tort, shall be limited to replacement, repair, or refund, as outlined above. IN NO EVENT WILL FPI BE LIABLE UNDER THIS WARRANTY FOR ANY INCIDENTAL OR CONSEQUENTIAL COMMERCIAL DAMAGES OR DAMAGES TO PROPERTY. TO THE EXTENT PERMITTED BY APPLICABLE LAW, FPI MAKES NO EXPRESS WARRANTIES OTHER THAN THE WARRANTY SPECIFIED HEREIN. THE DURATION OF ANY IMPLIED WARRANTY IS LIMITED TO DURATION OF THE EXPRESSED WARRANTY SPECIFIED ABOVE. IF IMPLIED WARRANTIES CANNOT BE DISCLAIMED, THEN SUCH WARRANTIES ARE LIMITED IN DURATION TO THE DURATION OF THIS WARRANTY.

Some US states do not allow limitations on how long an implied warranty lasts, or allow exclusion or limitation of incidental or consequential damages, so the above limitations or exclusions may not apply to you.

Customers located outside the US should consult their local, provincial or national legal codes for additional terms, which may be applicable to this warranty.

How to Obtain Warranty Service:
Customers should contact the authorized selling dealer to obtain warranty service. In the event the authorized selling dealer is unable to provide warranty service, please contact FPI by mail at the address listed below. Please include a brief description of the problem and your address, email and telephone contact information. A representative will contact you to make arrangements for an inspection and/or warranty service.

Canadian Warrantor:

FPI Fireplace Products International Ltd.
6988 Venture St.
Delta, British
Columbia Canada,
V4G 1H4

US Warrantor:

Fireplace Products U.S., Inc.
PO Box 2189 PMB 125
Blaine, WA
United States, 98231

Or contact the Regency Customer Care Centre at 1-800-442-7432 (phone) /604-946-4349 (fax) /customerservice@regency-fire.com (e-mail)

Product Registration and Customer Support:
Thank you for choosing a Regency Fireplace. Regency strives to be a world leader in the design, manufacture, and marketing of hearth products. To provide the best support for your product, we request that you complete a product registration form at http://www.regency-fire.com/Customer-Care/Warranty-Registration.aspx within **ninety (90)** days of purchase.

Warranty Registration Card

REGENCY
FIREPLACE PRODUCTS

Product Registration and Customer Support:

Thank you for choosing a Regency Fireplace. Regency strives to be a world leader in the design, manufacture, and marketing of hearth products. To provide the best support for your product, we request that you complete a product registration form found on our Web Site under Customer Care within ninety (90) days of purchase.

For purchases made in **CANADA or the UNITED STATES**:

http://www.regency-fire.com/Customer-Care/Warranty-Registration.aspx

For purchases made in AUSTRALIA:

http://www.regency-fire.com.au/Customer-Care/Warranty-Registration.aspx

You may also complete the warranty registration form below to register your Regency Fireplace Product and mail and/or fax it back to us, and we will register the warranty for you. It is important you provide us with all the information below in order for us to serve you better.

Warranty Registration Form (or Register online immediately at the above Web Site):

Warranty Details	
Serial Number (required):	
Purchase Date (required) (mm/dd/yyyy):	
Product Details	
Product Model (required):	
Dealer Details	
Dealer Name (required):	
Dealer Address:	
Dealer Phone #:	
Installer:	
Date Installed (mm/dd/yyyy):	
Your Contact Details (required)	
Name:	
Address:	
Phone:	
Email:	

For purchases made in CANADA:

FPI Fireplace Products International Ltd.
6988 Venture St.
Delta, British Columbia
Canada, V4G 1H4

Phone: 604-946-5155
Fax: 1-866-393-2806

For purchases made in the UNITED STATES:

Fireplace Products US, Inc.

PO Box 2189 PMB 125
Blaine, WA
United States, 98231

Phone: 604-946-5155
Fax: 1-866-393-2806

For purchases made in AUSTRALIA:

Fireplace Products Australia Pty Ltd
99 Colemans Road
Dandenong South, Vic.
Australia, 3175

Phone: +61 3 9799 7277
Fax: +61 3 9799 7822

For fireplace care and tips and answers to most common questions please visit our Customer Care section on our Web Site. Please feel free to contact your selling dealer if you have any questions about your Regency product.

notes

Installer: Please complete the following information

Dealer Name & Address: _____

_____

Installer: _____

Phone #: _____

Date Installed:_____

Serial #:_____

Regency and Classic are trademarks of FPI Fireplace Products International Ltd.
© Copyright 2024, FPI Fireplace Products International Ltd. All rights reserved.

Printed in Canada

Appendix C: Calibrations

QUALITY CONTROL SERVICES

LABORATORY EQUIPMENT • SALES • SERVICE • CALIBRATION • REPAIRS

2340 SE 11TH Ave. Portland, Oregon 97214 • Box 14831 Portland, Oregon 97293

(503) 236-2712 • FAX (503) 235-2535 • www.qc-services.com

Established 1974

A2LA ACCREDITED

CERTIFICATE #1550.01

PFS Teco
11785 SE Hwy 212 STE#305
Clackamas, OR 97015

Report Number: DIRI0182484A0912013i221214

A2LA ACCREDITED
CERTIFICATE OF CALIBRATION WITH DATA

INSTRUMENT INFORMATION

Item	Make	Model	Serial Number	Customer ID	Location
Scale	Digiweigh	DWP12i 300kg x 0.	82484A0912013i	#050	Lab
Units	**Readability**	**SOP**	**Cal Date**	**Last Cal Date**	**Cal Due Date**
kg	0.01	QC033	12/14/22	1/27/22	12/2023

FUNCTIONAL CHECKS

SHIFT TEST	LINEARITY	REPEATABILITY	ENVIRONMENTAL CONDITIONS
Test Wt: 100 / Tol: 0.05	Test Wt: HB44 / Tol: HB44	Test Wt: 100 / Tol: 0.01	☐ Good ☑ Fair ☐ Poor
As-Found: Pass:☑ Fail:☐	As-Found: Pass:☑ Fail:☐	As-Found: Pass:☑ Fail:☐	Temperature: 18.6°C
As-Left: Pass:☑ Fail:☐	As-Left: Pass:☑ Fail:☐	As-Left: Pass:☑ Fail:☐	

CALIBRATION DATA

Standard	As-Found	As-Left	Expanded Uncertainty
200	200.00	200.00	0.005
120	100.00	100.00	0.005
80	80.00	80.00	0.005
40	40.00	40.00	0.005
20	20.00	20.00	0.005
10	10.00	10.00	0.005

CALIBRATION STANDARDS

Item	Make	Model	Serial Number	Cal Date	Cal Due Date	NIST ID
Weight Set	R.L./Troemner	10kg to 1mg	G782	4/14/22	4/2023	20220751
Weight Set	Rice Lake	.001 to 10lb	PW0990	1/19/21	1/2023	20202519

Permanent Information Concerning this Equipment:

Comments/Information Concerning this Calibration

12/22: RH-46.7%

Report prepared/reviewed by: KD **Date:** 12/14/22 **Technician:** Ke Dexter

Signature:

THIS CERTIFICATE SHALL NOT BE REPRODUCED, EXCEPT IN FULL, WITHOUT THE APPROVAL OF QUALITY CONTROL SERVICES, INC.

The uncertainty is calculated according to the ISO Guide to the Expression of Uncertainty in Measurement and includes the uncertainty of standards used combined with the observed standard deviation of the unit under test. The uncertainty is expanded with a k factor of 2 for an approximate 95% level of confidence. Instruments listed above were calibrated using standards traceable to the National Institute of Standards and Technology (NIST). Calibration data reflect results at the time and location of calibration. Calibration data should be reviewed to insure that the instrument is performing to its required accuracy. Calibrations comply with ISO/IEC 17025 and ANSI/Z540-1-1994 quality standards.

Established 1974

QUALITY CONTROL SERVICES

LABORATORY EQUIPMENT • SALES • SERVICE • CALIBRATION • REPAIRS
2340 SE 11TH Ave. Portland, Oregon 97214 • Box 14831 Portland, Oregon 97293
(503) 236-2712 • FAX (503) 235-2535 • www.qc-services.com

A2LA ACCREDITED
CERTIFICATE #1550.01

PFS Teco
11785 SE Hwy 212 STE#305
Clackamas, OR 97015

Report Number: DIRI0182484A0912013i231228

A2LA ACCREDITED
CERTIFICATE OF CALIBRATION WITH DATA

INSTRUMENT INFORMATION

Item	Make	Model	Serial Number	Customer ID	Location
Scale	Digiweigh	DWP12i 300kg x 0.	82484A0912013i	#050	Lab
Units	**Readability**	**SOP**	**Cal Date**	**Last Cal Date**	**Cal Due Date**
lbs	0.01	QC033	12/28/23	12/14/22	12/2024

FUNCTIONAL CHECKS

SHIFT TEST	LINEARITY	REPEATABILITY	ENVIRONMENTAL CONDITIONS
Test Wt: 100 Tol: 0.05	Test Wt: HB44 Tol: HB44	Test Wt: 100 Tol: 0.01	☐ Good ☑ Fair ☐ Poor
As-Found: Pass:☑ Fail:☐	As-Found: Pass:☑ Fail:☐	As-Found: Pass:☑ Fail:☐	Temperature: 19.3°C
As-Left: Pass:☑ Fail:☐	As-Left: Pass:☑ Fail:☐	As-Left: Pass:☑ Fail:☐	

CALIBRATION DATA

Standard	As-Found	As-Left	Expanded Uncertainty
400	399.87	400.01	0.006
200	200.00	200.00	0.005
100	100.02	100.02	0.005
75	75.02	75.02	0.005
50	50.02	50.02	0.005
25	25.00	25.00	0.005

CALIBRATION STANDARDS

Item	Make	Model	Serial Number	Cal Date	Cal Due Date	NIST ID
Avoirdupois Cast W	Rice Lake	25 and 50lb	PWO990-CA	7/18/22	7/2024	20221688

Permanent Information Concerning this Equipment:

Comments/Information Concerning this Calibration

12/28/23: RH-42.5%

Report prepared/reviewed by: R.B. **Date:** 12-28-23 **Technician:** C.Call

Signature: [signature]

THIS CERTIFICATE SHALL NOT BE REPRODUCED, EXCEPT IN FULL, WITHOUT THE APPROVAL OF QUALITY CONTROL SERVICES, INC.

The uncertainty is calculated according to the ISO Guide to the Expression of Uncertainty in Measurement and includes the uncertainty of standards used combined with the observed standard deviation of the unit under test. The uncertainty is expanded with a k factor of 2 for an approximate 95% level of confidence. Instruments listed above were calibrated using standards traceable to the National Institute of Standards and Technology (NIST). Calibration data reflect results at the time and location of calibration. Calibration data should be reviewed to insure that the instrument is performing to its required accuracy. Calibrations comply with ISO/IEC 17025 and ANSI/Z540-1-1994 quality standards.

Member: National Conference of Standards Laboratories and Weights & Measures

PT ID: DIRI01

Dry Gas Meter Calibration

DUT	
Manufacturer:	APEX
Model:	XC-60
Lab ID #:	53
Serial #:	1902130
Calibration Date:	8/2/2023
Calibration Expiration:	2/2/2024
Barometric Pressure:	29.96 in. Hg

Equipment Used:	Ref. Std. DGM	Thermometer	Barometer	Manometer
Manufacturer:	Apex	Fluke	Aquatech	Dwyer
Model:	SK25DA	52 II	DBX2	475
Lab ID#:	47	196	202	174
Calibration Expiration Date:	4/17/2024	11/29/2023	5/23/2024	4/21/2024
Calibration γ Factor:	0.9988			

Use in accordance with EPA Method 5, sections 10.3 and 16.1. Use only calibrated, NIST traceable reference standard DGM. Caibrate over expected operating flow range of DUT.

Calibration Data	Run 1	Run 2	Run 3
Standard DGM Initial Volume (L)	0.000	0.000	0.000
Standard DGM Final Volume (L)	177.098	365.328	139.901
Standard DGM Temperature (°F)	75.0	78.0	78.0
Standard DGM Pressure (in H_2O)	0.00	0.00	0.0
DGM Initial Volume (ft^3)	0.000	0.000	0.000
DGM Final Volume (ft^3)	6.200	13.217	5.120
DGM Temperature (°F)	81.0	97.0	99.0
DGM Pressure (in H_2O)	3.09	2.25	1.9
Net Volume for Standard DGM (ft^3)	6.254	12.901	4.941
Net Volume for DGM (ft^3)	6.200	13.217	5.120

Dry Gas Meter γ Factor	1.011	1.004	0.997
γ Factor Deviation From Average	1.011	1.004	0.997

Average Gas Meter γ Factor: 1.004

Measurement Uncertainty: Total measurement uncertainty +/- 0.748% RD, K=2

Calculations:

1. Deviation = |Average value for all runs - current run value|
2. $\gamma = [V_{std} \times (\gamma_{Std}) \times (P_{bar}+P_{std}/13.6) \times (T_{DGM} + 460)] / [V_{DGM} \times (T_{std} + 460) \times (P_{bar} + P_{DGM}/ 13.6)]$

Report and Certificate of Calibration

CAL-CERT CALIBRATION CERTIFICATION

www.Cal-Cert.com

Toll Free 800-356-4662

Address 5777 SE International Way Milwaukie, OR 97222

Local 503-654-9620

ACCREDITED CERT #4986.01

Report #:	28140-203324-14	**Customer PO#:** 1090	
Customer Name:	PFS TECO		
Customer Address:	11785 SE Highway 212 Ste 305		
City:	Clackamas	**State:** OR	**Zip:** 97015
Contact:	Aaron Kravitz		
Service Address:	11785 SE Highway 212 Ste 305	Clackamas, OR 97015	

Calibration Standards

19-00269 | Thermo-Hygrometer | Comark | SN: 6237360167 | Cal: 09/14/2022 | Due: 08/31/2023 | Vendor: Cal-Cert | Range: 122 °F 95 %RH | Report #: 25699-30694-3486
LA-01776 | Pressure Transducer | Fluke | SN: 5956001 | Cal: 11/25/2022 | Due: 11/25/2023 | Range: 10 in H2O | Report #: EVL846346

Instrument Data

Calibration Date:	March 1, 2023	**Reference:**	ASME B40.100
Recommended Due Date:	March 1, 2024	**Cal-Cert Procedure:**	CP-003
Calibration Frequency:	12 Months	**Indicating System:**	Digital
Manufacturer:	Newport	**Temperature:**	73 °F
Type:	Pressure Transducer	**Humidity:**	30% RH
Model Number:	Unknown	**Cal Factor:**	None
Serial #:	Unknown	**Asset #:**	53C
Capacity:	5 In H2O	**Service Location:**	Service Address
Tolerance:	± 1.00% of Span	**As Found:**	Pass
Gauge Class:	A	**As Left:**	Pass

Instrument Range: 5.00 **Range Resolution:** 0.01 **Mode Verified:** Pressure

UUT Reading In H2O	Standard As Found In H2O	Standard Verification Reading #1 In H2O	Error In H2O	Standard Verification Reading #2 In H2O	Error In H2O	Tolerance In H2O	Expanded Uncertainty ± In H2O
0.00	0.00	0.00	0.00	0.00	0.00	0.05	0.005
0.50	0.50	0.50	0.00	0.50	0.00	0.05	0.005
1.25	1.25	1.25	0.00	1.25	0.00	0.05	0.005
2.50	2.50	2.50	0.00	2.50	0.00	0.05	0.006
3.75	3.75	3.75	0.00	3.75	0.00	0.05	0.007
5.00	5.00	5.00	0.00	5.00	0.00	0.05	0.008
3.75	3.75	3.75	0.00	3.75	0.00	0.05	0.007
2.50	2.50	2.50	0.00	2.50	0.00	0.05	0.006
1.25	1.25	1.25	0.00	1.25	0.00	0.05	0.005
0.50	0.50	0.50	0.00	0.50	0.00	0.05	0.005
0.00	0.00	0.00	0.00	0.00	0.00	0.05	0.005

Copyright 2013 Cal-Cert. All rights reserved.

Manufacturer: Newport **Type:** Pressure Transducer **Serial #:** Unknown

Remarks:

We sincerely thank you for your business. Please call us at 503-654-9620 for all your sales and calibration needs.
Cleaning and preventative maintenance were performed as part of this service.

Cal-Cert is accredited by A2LA under Calibration Laboratory Code #4986.01.
A2LA is recognized under the ILAC mutual recognition agreement (MRA).

This certificate is hereby issued that the above instrument was tested for accuracy with calibrated standards traceable to the National Institute of Standards and Technology (NIST). The information provided on this form complies with the data gathering and reporting requirements of ISO/IEC 17025 and ANSI/NCSL Z540.1, and meets the requirements of all applicable references and Cal-Cert procedures listed above.
Any stated measurement uncertainty includes the uncertainty of the Calibration standards used, combined with the uncertainty of the measurement process using the RSS method with a k=2 for an approximate 95% level of confidence. The calibration process meets or exceeds a ratio of 4:1 unless otherwise stated.
All tolerances were derived from the applicable standards and pass/fail determination is based on those tolerances. The customer determined any recommended due dates indicated on the certificate.

This report shall not be reproduced except in full, without written approval from Cal-Cert.

Service Engineer: Jon Rau **Date:** March 1, 2023

Technical Manager: Marshall Doyle **Signature:** MDoyle

Report #: 28140-203324-14

Copyright 2013 Cal-Cert. All rights reserved.

Report and Certificate of Calibration

CAL-CERT CALIBRATION CERTIFICATION

www.Cal-Cert.com

Toll Free 800-356-4662

Address 5777 SE International Way Milwaukie, OR 97222

Local 503-654-9620

ACCREDITED CERT #4986.01

Report #:	28140-203324-14	**Customer PO#:** 1090	
Customer Name:	PFS TECO		
Customer Address:	11785 SE Highway 212 Ste 305		
City:	Clackamas	**State:** OR	**Zip:** 97015
Contact:	Aaron Kravitz		
Service Address:	11785 SE Highway 212 Ste 305	Clackamas, OR 97015	

Calibration Standards

19-00269 | Thermo-Hygrometer | Comark | SN: 6237360167 | Cal: 09/14/2022 | Due: 08/31/2023 | Vendor: Cal-Cert | Range: 122 °F 95 %RH | Report #: 25699-30694-3486
LA-01776 | Pressure Transducer | Fluke | SN: 5956001 | Cal: 11/25/2022 | Due: 11/25/2023 | Range: 10 in H2O | Report #: EVL846346

Instrument Data

Calibration Date:	March 1, 2023	**Reference:**	ASME B40.100
Recommended Due Date:	March 1, 2024	**Cal-Cert Procedure:**	CP-003
Calibration Frequency:	12 Months	**Indicating System:**	Digital
Manufacturer:	Newport	**Temperature:**	73 °F
Type:	Pressure Transducer	**Humidity:**	30% RH
Model Number:	Unknown	**Cal Factor:**	None
Serial #:	Unknown	**Asset #:**	53C
Capacity:	5 In H2O	**Service Location:**	Service Address
Tolerance:	± 1.00% of Span	**As Found:**	Pass
Gauge Class:	A	**As Left:**	Pass

Instrument Range: 5.00 **Range Resolution:** 0.01 **Mode Verified:** Pressure

UUT Reading In H2O	Standard As Found In H2O	Standard Verification Reading #1 In H2O	Error In H2O	Standard Verification Reading #2 In H2O	Error In H2O	Tolerance In H2O	Expanded Uncertainty ± In H2O
0.00	0.00	0.00	0.00	0.00	0.00	0.05	0.005
0.50	0.50	0.50	0.00	0.50	0.00	0.05	0.005
1.25	1.25	1.25	0.00	1.25	0.00	0.05	0.005
2.50	2.50	2.50	0.00	2.50	0.00	0.05	0.006
3.75	3.75	3.75	0.00	3.75	0.00	0.05	0.007
5.00	5.00	5.00	0.00	5.00	0.00	0.05	0.008
3.75	3.75	3.75	0.00	3.75	0.00	0.05	0.007
2.50	2.50	2.50	0.00	2.50	0.00	0.05	0.006
1.25	1.25	1.25	0.00	1.25	0.00	0.05	0.005
0.50	0.50	0.50	0.00	0.50	0.00	0.05	0.005
0.00	0.00	0.00	0.00	0.00	0.00	0.05	0.005

Copyright 2013 Cal-Cert. All rights reserved.

Manufacturer: Newport **Type:** Pressure Transducer **Serial #:** Unknown

Remarks:

We sincerely thank you for your business. Please call us at 503-654-9620 for all your sales and calibration needs.
Cleaning and preventative maintenance were performed as part of this service.

Cal-Cert is accredited by A2LA under Calibration Laboratory Code #4986.01.
A2LA is recognized under the ILAC mutual recognition agreement (MRA).

This certificate is hereby issued that the above instrument was tested for accuracy with calibrated standards traceable to the National Institute of Standards and Technology (NIST). The information provided on this form complies with the data gathering and reporting requirements of ISO/IEC 17025 and ANSI/NCSL Z540.1, and meets the requirements of all applicable references and Cal-Cert procedures listed above.
Any stated measurement uncertainty includes the uncertainty of the Calibration standards used, combined with the uncertainty of the measurement process using the RSS method with a k=2 for an approximate 95% level of confidence. The calibration process meets or exceeds a ratio of 4:1 unless otherwise stated.
All tolerances were derived from the applicable standards and pass/fail determination is based on those tolerances. The customer determined any recommended due dates indicated on the certificate.

This report shall not be reproduced except in full, without written approval from Cal-Cert.

Service Engineer: Jon Rau **Date:** March 1, 2023

Technical Manager: Marshall Doyle **Signature:** MDoyle

Report #: 28140-203324-14

Copyright 2013 Cal-Cert. All rights reserved.

Dry Gas Meter Calibration

DUT	
Manufacturer:	APEX
Model:	XC-60
Lab ID #:	54
Serial #:	1902133
Calibration Date:	8/2/2023
Calibration Expiration:	2/2/2024
Barometric Pressure:	29.88 in. Hg

Equipment Used:	Ref. Std. DGM	Thermometer	Barometer	Manometer
Manufacturer:	Apex	Fluke	Aquatech	Dwyer
Model:	SK25DA	52 II	DBX2	475
Lab ID#:	47	196	202	174
Calibration Expiration Date:	4/17/2024	11/29/2023	5/23/2024	4/21/2024
Calibration γ Factor:	0.9988			

Use in accordance with EPA Method 5, sections 10.3 and 16.1. Use only calibrated, NIST traceable reference standard DGM. Caibrate over expected operating flow range of DUT.

Calibration Data	Run 1	Run 2	Run 3
Standard DGM Initial Volume (L)	0.000	0.000	0.000
Standard DGM Final Volume (L)	359.264	410.313	150.574
Standard DGM Temperature (°F)	73.0	75.0	77.0
Standard DGM Pressure (in H_2O)	0.00	0.00	0.0
DGM Initial Volume (ft^3)	0.000	0.000	0.000
DGM Final Volume (ft^3)	12.737	14.948	5.485
DGM Temperature (°F)	85.0	93.0	101.0
DGM Pressure (in H_2O)	2.98	1.57	2.3
Net Volume for Standard DGM (ft^3)	12.687	14.490	5.317
Net Volume for DGM (ft^3)	12.737	14.948	5.485

Dry Gas Meter γ Factor	1.010	0.997	1.006
γ Factor Deviation From Average	1.010	0.997	1.006

Average Gas Meter γ Factor: 1.004

Measurement Uncertainty: Total measurement uncertainty +/- 0.748% RD, K=2

Calculations:

1. Deviation = |Average value for all runs - current run value|
2. $\gamma = [V_{std} \times (\gamma_{Std}) \times (P_{bar}+P_{std}/13.6) \times (T_{DGM} + 460)] / [V_{DGM} \times (T_{std} + 460) \times (P_{bar} + P_{DGM}/ 13.6)]$

Report and Certificate of Calibration

CAL-CERT CALIBRATION CERTIFICATION

www.Cal-Cert.com

Toll Free 800-356-4662

Address 5777 SE International Way Milwaukie, OR 97222

Local 503-654-9620

ACCREDITED CERT #4986.01

Report #:	28140-203325-14	**Customer PO#:** 1090	
Customer Name:	PFS TECO		
Customer Address:	11785 SE Highway 212 Ste 305		
City:	Clackamas	**State:** OR	**Zip:** 97015
Contact:	Aaron Kravitz		
Service Address:	11785 SE Highway 212 Ste 305	Clackamas, OR 97015	

Calibration Standards

19-00269 | Thermo-Hygrometer | Comark | SN: 6237360167 | Cal: 09/14/2022 | Due: 08/31/2023 | Vendor: Cal-Cert | Range: 122 °F 95 %RH | Report #: 25699-30694-3486
LA-01776 | Pressure Transducer | Fluke | SN: 5956001 | Cal: 11/25/2022 | Due: 11/25/2023 | Range: 10 in H2O | Report #: EVL846346

Instrument Data

Calibration Date:	March 1, 2023	**Reference:**	ASME B40.100
Recommended Due Date:	March 1, 2024	**Cal-Cert Procedure:**	CP-003
Calibration Frequency:	12 Months	**Indicating System:**	Digital
Manufacturer:	Newport	**Temperature:**	68 °F
Type:	Pressure Transducer	**Humidity:**	37% RH
Model Number:	Unknown	**Cal Factor:**	None
Serial #:	Unknown	**Asset #:**	54B
Capacity:	1 In H2O	**Service Location:**	Service Address
Tolerance:	± 1.00% of Span	**As Found:**	Pass
Gauge Class:	A	**As Left:**	Pass

Instrument Range: 1.00 **Range Resolution:** 0.01 **Mode Verified:** Pressure

UUT Reading In H2O	Standard As Found In H2O	Standard Verification Reading #1 In H2O	Error In H2O	Standard Verification Reading #2 In H2O	Error In H2O	Tolerance In H2O	Expanded Uncertainty ± In H2O
0.00	0.00	0.00	0.00	0.00	0.00	0.01	0.005
0.10	0.10	0.10	0.00	0.10	0.00	0.01	0.005
0.25	0.25	0.25	0.00	0.25	0.00	0.01	0.005
0.50	0.50	0.50	0.00	0.50	0.00	0.01	0.005
0.75	0.75	0.75	0.00	0.75	0.00	0.01	0.005
1.00	0.99	0.99	-0.01	0.99	-0.01	0.01	0.005
0.75	0.75	0.75	0.00	0.75	0.00	0.01	0.005
0.50	0.50	0.50	0.00	0.50	0.00	0.01	0.005
0.25	0.25	0.25	0.00	0.25	0.00	0.01	0.005
0.10	0.10	0.10	0.00	0.10	0.00	0.01	0.005
0.00	0.00	0.00	0.00	0.00	0.00	0.01	0.005

Copyright 2013 Cal-Cert. All rights reserved.

Manufacturer: Newport **Type:** Pressure Transducer **Serial #:** Unknown

Remarks:

We sincerely thank you for your business. Please call us at 503-654-9620 for all your sales and calibration needs.
Cleaning and preventative maintenance were performed as part of this service.

Cal-Cert is accredited by A2LA under Calibration Laboratory Code #4986.01.
A2LA is recognized under the ILAC mutual recognition agreement (MRA).

This certificate is hereby issued that the above instrument was tested for accuracy with calibrated standards traceable to the National Institute of Standards and Technology (NIST). The information provided on this form complies with the data gathering and reporting requirements of ISO/IEC 17025 and ANSI/NCSL Z540.1, and meets the requirements of all applicable references and Cal-Cert procedures listed above.
Any stated measurement uncertainty includes the uncertainty of the Calibration standards used, combined with the uncertainty of the measurement process using the RSS method with a k=2 for an approximate 95% level of confidence. The calibration process meets or exceeds a ratio of 4:1 unless otherwise stated.
All tolerances were derived from the applicable standards and pass/fail determination is based on those tolerances. The customer determined any recommended due dates indicated on the certificate.

This report shall not be reproduced except in full, without written approval from Cal-Cert.

Service Engineer: Jon Rau **Date:** March 1, 2023

Technical Manager: Marshall Doyle **Signature:** MDoyle

Report #: 28140-203325-14

Copyright 2013 Cal-Cert. All rights reserved.

Report and Certificate of Calibration

CAL-CERT CALIBRATION CERTIFICATION

www.Cal-Cert.com

Toll Free 800-356-4662

Address 5777 SE International Way Milwaukie, OR 97222

Local 503-654-9620

ACCREDITED CERT #4986.01

Report #:	28140-203326-14	**Customer PO#:** 1090	
Customer Name:	PFS TECO		
Customer Address:	11785 SE Highway 212 Ste 305		
City:	Clackamas	**State:** OR	**Zip:** 97015
Contact:	Aaron Kravitz		
Service Address:	11785 SE Highway 212 Ste 305	Clackamas, OR 97015	

Calibration Standards

19-00269 | Thermo-Hygrometer | Comark | SN: 6237360167 | Cal: 09/14/2022 | Due: 08/31/2023 | Vendor: Cal-Cert | Range: 122 °F 95 %RH | Report #: 25699-30694-3486
LA-01776 | Pressure Transducer | Fluke | SN: 5956001 | Cal: 11/25/2022 | Due: 11/25/2023 | Range: 10 in H2O | Report #: EVL846346

Instrument Data

Calibration Date:	March 1, 2023	**Reference:**	ASME B40.100
Recommended Due Date:	March 1, 2024	**Cal-Cert Procedure:**	CP-003
Calibration Frequency:	12 Months	**Indicating System:**	Digital
Manufacturer:	Newport	**Temperature:**	73 °F
Type:	Pressure Transducer	**Humidity:**	30% RH
Model Number:	Unknown	**Cal Factor:**	None
Serial #:	Unknown	**Asset #:**	54C
Capacity:	5 In H2O	**Service Location:**	Service Address
Tolerance:	± 1.00% of Span	**As Found:**	Pass
Gauge Class:	A	**As Left:**	Pass

Instrument Range: 5.00 **Range Resolution:** 0.01 **Mode Verified:** Pressure

UUT Reading In H2O	Standard As Found In H2O	Standard Verification Reading #1 In H2O	Error In H2O	Standard Verification Reading #2 In H2O	Error In H2O	Tolerance In H2O	Expanded Uncertainty ± In H2O
0.00	0.00	0.00	0.00	0.00	0.00	0.05	0.005
0.50	0.50	0.50	0.00	0.50	0.00	0.05	0.005
1.25	1.25	1.25	0.00	1.25	0.00	0.05	0.005
2.50	2.50	2.50	0.00	2.50	0.00	0.05	0.006
3.75	3.75	3.75	0.00	3.75	0.00	0.05	0.007
5.00	5.00	5.00	0.00	5.00	0.00	0.05	0.008
3.75	3.75	3.75	0.00	3.75	0.00	0.05	0.007
2.50	2.50	2.50	0.00	2.50	0.00	0.05	0.006
1.25	1.25	1.25	0.00	1.25	0.00	0.05	0.005
0.50	0.50	0.50	0.00	0.50	0.00	0.05	0.005
0.00	0.00	0.00	0.00	0.00	0.00	0.05	0.005

Copyright 2013 Cal-Cert. All rights reserved.

Manufacturer: Newport **Type:** Pressure Transducer **Serial #:** Unknown

Remarks:

We sincerely thank you for your business. Please call us at 503-654-9620 for all your sales and calibration needs.
Cleaning and preventative maintenance were performed as part of this service.

Cal-Cert is accredited by A2LA under Calibration Laboratory Code #4986.01.
A2LA is recognized under the ILAC mutual recognition agreement (MRA).

This certificate is hereby issued that the above instrument was tested for accuracy with calibrated standards traceable to the National Institute of Standards and Technology (NIST). The information provided on this form complies with the data gathering and reporting requirements of ISO/IEC 17025 and ANSI/NCSL Z540.1, and meets the requirements of all applicable references and Cal-Cert procedures listed above.
Any stated measurement uncertainty includes the uncertainty of the Calibration standards used, combined with the uncertainty of the measurement process using the RSS method with a k=2 for an approximate 95% level of confidence. The calibration process meets or exceeds a ratio of 4:1 unless otherwise stated.
All tolerances were derived from the applicable standards and pass/fail determination is based on those tolerances. The customer determined any recommended due dates indicated on the certificate.

This report shall not be reproduced except in full, without written approval from Cal-Cert.

Service Engineer: Jon Rau **Date:** March 1, 2023

Technical Manager: Marshall Doyle **Signature:** MDoyle

Report #: 28140-203326-14

Copyright 2013 Cal-Cert. All rights reserved.

Dry Gas Meter Calibration

DUT	
Manufacturer:	APEX
Model:	XC-50-DIR
Lab ID #:	203
Serial #:	A2204292
Calibration Date:	8/2/2023
Calibration Expiration:	2/2/2024
Barometric Pressure:	29.95 in. Hg

Equipment Used:	Ref. Std. DGM	Thermometer	Barometer	Manometer
Manufacturer:	Apex	Fluke	Aquatech	Dwyer
Model:	SK25DA	52 II	DBX2	475
Lab ID#:	47	196	202	174
Calibration Expiration Date:	4/17/2024	11/29/2023	5/23/2024	4/21/2024
Calibration γ Factor:	0.9988			

Use in accordance with EPA Method 5, sections 10.3 and 16.1. Use only calibrated, NIST traceable reference standard DGM. Caibrate over expected operating flow range of DUT.

Calibration Data	Run 1	Run 2	Run 3
Standard DGM Initial Volume (L)	0.000	0.000	0.000
Standard DGM Final Volume (L)	145.280	144.545	148.847
Standard DGM Temperature (°F)	78.0	79.0	79.0
Standard DGM Pressure (in H_2O)	0.00	0.00	0.0
DGM Initial Volume (ft^3)	0.000	0.000	0.000
DGM Final Volume (ft^3)	5.087	5.161	5.355
DGM Temperature (°F)	85.0	93.0	96.0
DGM Pressure (in H_2O)	2.33	1.17	0.9
Net Volume for Standard DGM (ft^3)	5.131	5.105	5.256
Net Volume for DGM (ft^3)	5.087	5.161	5.355

Dry Gas Meter γ Factor	1.015	1.011	1.009
γ Factor Deviation From Average	1.015	1.011	1.009

Average Gas Meter γ Factor: 1.011

Measurement Uncertainty: Total measurement uncertainty +/- 0.748% RD, K=2

Calculations:

1. Deviation = |Average value for all runs - current run value|
2. $\gamma = [V_{std} \times (\gamma_{Std}) \times (P_{bar}+P_{std}/13.6) \times (T_{DGM} + 460)] / [V_{DGM} \times (T_{std} + 460) \times (P_{bar} + P_{DGM}/ 13.6)]$

 Technician:

Report and Certificate of Calibration

CAL-CERT CALIBRATION CERTIFICATION

www.Cal-Cert.com

Toll Free 800-356-4662

Address 5777 SE International Way Milwaukie, OR 97222

Local 503-654-9620

ACCREDITED CERT #4986.01

Report #:	28140-203319-14	**Customer PO#:** 1090	
Customer Name:	PFS TECO		
Customer Address:	11785 SE Highway 212 Ste 305		
City:	Clackamas	**State:** OR	**Zip:** 97015
Contact:	Aaron Kravitz		
Service Address:	11785 SE Highway 212 Ste 305	Clackamas, OR 97015	

Calibration Standards

19-00269 | Thermo-Hygrometer | Comark | SN: 6237360167 | Cal: 09/14/2022 | Due: 08/31/2023 | Vendor: Cal-Cert | Range: 122 °F 95 %RH | Report #: 25699-30694-3486
LA-01776 | Pressure Transducer | Fluke | SN: 5956001 | Cal: 11/25/2022 | Due: 11/25/2023 | Range: 10 in H2O | Report #: EVL846346

Instrument Data

Calibration Date:	March 1, 2023	**Reference:**	ASME B40.100
Recommended Due Date:	March 1, 2024	**Cal-Cert Procedure:**	CP-003
Calibration Frequency:	12 Months	**Indicating System:**	Digital
Manufacturer:	Red Lion	**Temperature:**	69 °F
Type:	Pressure Transducer	**Humidity:**	35% RH
Model Number:	Unknown	**Cal Factor:**	None
Serial #:	Unknown	**Asset #:**	203B
Capacity:	1 In H2O	**Service Location:**	Service Address
Tolerance:	± 1.00% of Span	**As Found:**	Pass
Gauge Class:	A	**As Left:**	Pass

Instrument Range: 1.00 **Range Resolution:** 0.001 **Mode Verified:** Pressure

UUT Reading In H2O	Standard As Found In H2O	Standard Verification Reading #1 In H2O	Error In H2O	Standard Verification Reading #2 In H2O	Error In H2O	Tolerance In H2O	Expanded Uncertainty ± In H2O
0.000	0.000	0.000	0.00	0.000	0.00	0.01	0.0005
0.100	0.100	0.100	0.00	0.100	0.00	0.01	0.0005
0.250	0.250	0.250	0.00	0.250	0.00	0.01	0.0006
0.500	0.500	0.500	0.00	0.500	0.00	0.01	0.0008
0.750	0.750	0.750	0.00	0.750	0.00	0.01	0.001
1.000	1.000	1.000	0.00	1.000	0.00	0.01	0.0012
0.750	0.750	0.750	0.00	0.750	0.00	0.01	0.001
0.500	0.500	0.500	0.00	0.500	0.00	0.01	0.0008
0.250	0.250	0.250	0.00	0.250	0.00	0.01	0.0006
0.100	0.100	0.100	0.00	0.100	0.00	0.01	0.0005
0.000	0.000	0.000	0.00	0.000	0.00	0.01	0.0005

Copyright 2013 Cal-Cert. All rights reserved.

Manufacturer: Red Lion **Type:** Pressure Transducer **Serial #:** Unknown

Remarks:

We sincerely thank you for your business. Please call us at 503-654-9620 for all your sales and calibration needs.
Cleaning and preventative maintenance were performed as part of this service.

Cal-Cert is accredited by A2LA under Calibration Laboratory Code #4986.01.
A2LA is recognized under the ILAC mutual recognition agreement (MRA).

This certificate is hereby issued that the above instrument was tested for accuracy with calibrated standards traceable to the National Institute of Standards and Technology (NIST). The information provided on this form complies with the data gathering and reporting requirements of ISO/IEC 17025 and ANSI/NCSL Z540.1, and meets the requirements of all applicable references and Cal-Cert procedures listed above.
Any stated measurement uncertainty includes the uncertainty of the Calibration standards used, combined with the uncertainty of the measurement process using the RSS method with a k=2 for an approximate 95% level of confidence. The calibration process meets or exceeds a ratio of 4:1 unless otherwise stated.
All tolerances were derived from the applicable standards and pass/fail determination is based on those tolerances. The customer determined any recommended due dates indicated on the certificate.

This report shall not be reproduced except in full, without written approval from Cal-Cert.

Service Engineer: Jon Rau **Date:** March 1, 2023

Technical Manager: Marshall Doyle **Signature:** MDoyle

Report #: 28140-203319-14

Copyright 2013 Cal-Cert. All rights reserved.

Report and Certificate of Calibration

CAL-CERT CALIBRATION CERTIFICATION

www.Cal-Cert.com

Toll Free 800-356-4662

Address 5777 SE International Way Milwaukie, OR 97222

Local 503-654-9620

ACCREDITED CERT #4986.01

Report #:	28140-203320-14	**Customer PO#:** 1090	
Customer Name:	PFS TECO		
Customer Address:	11785 SE Highway 212 Ste 305		
City:	Clackamas	**State:** OR	**Zip:** 97015
Contact:	Aaron Kravitz		
Service Address:	11785 SE Highway 212 Ste 305	Clackamas, OR 97015	

Calibration Standards

19-00269 | Thermo-Hygrometer | Comark | SN: 6237360167 | Cal: 09/14/2022 | Due: 08/31/2023 | Vendor: Cal-Cert | Range: 122 °F 95 %RH | Report #: 25699-30694-3486
LA-01776 | Pressure Transducer | Fluke | SN: 5956001 | Cal: 11/25/2022 | Due: 11/25/2023 | Range: 10 in H2O | Report #: EVL846346

Instrument Data

Calibration Date:	March 1, 2023	**Reference:**	ASME B40.100
Recommended Due Date:	March 1, 2024	**Cal-Cert Procedure:**	CP-003
Calibration Frequency:	12 Months	**Indicating System:**	Digital
Manufacturer:	Red Lion	**Temperature:**	73 °F
Type:	Pressure Transducer	**Humidity:**	30% RH
Model Number:	Unknown	**Cal Factor:**	None
Serial #:	Unknown	**Asset #:**	203C
Capacity:	5 In H2O	**Service Location:**	Service Address
Tolerance:	± 1.00% of Span	**As Found:**	Pass
Gauge Class:	A	**As Left:**	Pass

Instrument Range: 5.00 **Range Resolution:** 0.01 **Mode Verified:** Pressure

UUT Reading In H2O	Standard As Found In H2O	Standard Verification Reading #1 In H2O	Error In H2O	Standard Verification Reading #2 In H2O	Error In H2O	Tolerance In H2O	Expanded Uncertainty ± In H2O
0.00	0.00	0.00	0.00	0.00	0.00	0.05	0.005
0.50	0.50	0.50	0.00	0.50	0.00	0.05	0.005
1.25	1.25	1.25	0.00	1.25	0.00	0.05	0.005
2.50	2.50	2.50	0.00	2.50	0.00	0.05	0.006
3.75	3.75	3.75	0.00	3.75	0.00	0.05	0.007
5.00	5.00	5.00	0.00	5.00	0.00	0.05	0.008
3.75	3.75	3.75	0.00	3.75	0.00	0.05	0.007
2.50	2.50	2.50	0.00	2.50	0.00	0.05	0.006
1.25	1.25	1.25	0.00	1.25	0.00	0.05	0.005
0.50	0.50	0.50	0.00	0.50	0.00	0.05	0.005
0.00	0.00	0.00	0.00	0.00	0.00	0.05	0.005

Copyright 2013 Cal-Cert. All rights reserved.

Manufacturer: Red Lion **Type:** Pressure Transducer **Serial #:** Unknown

Remarks:

We sincerely thank you for your business. Please call us at 503-654-9620 for all your sales and calibration needs.
Cleaning and preventative maintenance were performed as part of this service.

Cal-Cert is accredited by A2LA under Calibration Laboratory Code #4986.01.
A2LA is recognized under the ILAC mutual recognition agreement (MRA).

This certificate is hereby issued that the above instrument was tested for accuracy with calibrated standards traceable to the National Institute of Standards and Technology (NIST). The information provided on this form complies with the data gathering and reporting requirements of ISO/IEC 17025 and ANSI/NCSL Z540.1, and meets the requirements of all applicable references and Cal-Cert procedures listed above.
Any stated measurement uncertainty includes the uncertainty of the Calibration standards used, combined with the uncertainty of the measurement process using the RSS method with a k=2 for an approximate 95% level of confidence. The calibration process meets or exceeds a ratio of 4:1 unless otherwise stated.
All tolerances were derived from the applicable standards and pass/fail determination is based on those tolerances. The customer determined any recommended due dates indicated on the certificate.

This report shall not be reproduced except in full, without written approval from Cal-Cert.

Service Engineer: Jon Rau **Date:** March 1, 2023

Technical Manager: Marshall Doyle **Signature:** MDoyle

Report #: 28140-203320-14

Copyright 2013 Cal-Cert. All rights reserved.

Dry Gas Meter Calibration

DUT	
Manufacturer:	APEX
Model:	XC-60
Lab ID #:	55
Serial #:	1902130
Calibration Date:	8/4/2023
Calibration Expiration:	2/4/2024
Barometric Pressure:	30.02 in. Hg

Equipment Used:	Ref. Std. DGM	Thermometer	Barometer	Manometer
Manufacturer:	Apex	Fluke	Aquatech	Dwyer
Model:	SK25DA	52 II	DBX2	475
Lab ID#:	47	196	202	174
Calibration Expiration Date:	4/17/2024	11/29/2023	5/23/2024	4/21/2024
Calibration γ Factor:	0.9988			

Use in accordance with EPA Method 5, sections 10.3 and 16.1. Use only calibrated, NIST traceable reference standard DGM. Caibrate over expected operating flow range of DUT.

Calibration Data	Run 1	Run 2	Run 3
Standard DGM Initial Volume (L)	0.000	0.000	0.000
Standard DGM Final Volume (L)	234.129	172.446	304.050
Standard DGM Temperature (°F)	73.0	73.0	75.0
Standard DGM Pressure (in H_2O)	0.00	0.00	0.0
DGM Initial Volume (ft^3)	0.000	0.000	0.000
DGM Final Volume (ft^3)	8.380	6.176	10.856
DGM Temperature (°F)	83.0	82.0	83.0
DGM Pressure (in H_2O)	0.00	0.00	0.0
Net Volume for Standard DGM (ft^3)	8.268	6.090	10.737
Net Volume for DGM (ft^3)	8.380	6.176	10.856

Dry Gas Meter γ Factor	1.004	1.001	1.003
γ Factor Deviation From Average	1.004	1.001	1.003

Average Gas Meter γ Factor: 1.003

Measurement Uncertainty: Total measurement uncertainty +/- 0.748% RD, K=2

Calculations:

1. Deviation = |Average value for all runs - current run value|
2. $\gamma = [V_{std} \times (\gamma_{Std}) \times (P_{bar}+P_{std}/13.6) \times (T_{DGM} + 460)] / [V_{DGM} \times (T_{std} + 460) \times (P_{bar} + P_{DGM}/ 13.6)]$

 Technician:

Report and Certificate of Calibration

CAL-CERT
CALIBRATION CERTIFICATION

Portland Laboratory
5777 SE International Way
Milwaukie, OR 97222
800-356-4662
503-654-9620

Anaheim Laboratory
120 S. Chaparral Ct Suite 110
Anaheim Hills, CA 92808
888-700-4100
714-696-5300

www.Cal-Cert.com

Report #: 30452-28785-3646 **Customer PO#:** 1100
Customer Name: PFS TECO
Customer Address: 11785 SE Highway 212, Suite 305
City: Clackamas **State:** OR **Zip:** 97015
Contact: John Steinert
Service Address: 5777 SE International Way Milwaukie, OR 97222

Calibration Standards

LP-00051 | Electrical Meter | Fluke | SN: 9663004 | Cal: 01/10/2023 | Due: 01/10/2024 | Vendor: Fluke | Report #: EVL861119
LP-01333 | Electrical Meter | IET Labs, Inc. | SN: E3-1842499 | Cal: 01/19/2023 | Due: 01/31/2024 | Vendor: Transcat Calibration Lab | Report #: 5-G584Z-20-1
LP-01347 | Thermo-Hygrometer | Comark | SN: 06210350163 | Cal: 04/18/2023 | Due: 04/30/2024 | Vendor: Cal-Cert | Range: 122 °F 95 %RH | Report #: 28945-67214-3646

Instrument Data

Calibration Date: August 9, 2023
Recommended Due Date: August 9, 2024
Calibration Frequency: 12 Months
Manufacturer: Delmhorst
Type: Resistivity Meter
Model Number: MCS-1
Serial #: #094
Capacity: 120 Megaohms
Tolerance: 3.00 % of indication

Reference: Manufactures Tolerances
Cal-Cert Procedure: CP-080
Indicating System: Digital
Temperature: 74 °F
Humidity: 36% RH
Asset #: #094
Service Location: Cal-Cert Lab
As Found: Pass
As Left: Pass

Instrument Range: 120 Megaohms **Resolution:** 0.001 **Mode Verified:** Resistance

Standard Reading	UUT As Found	UUT Reading #1	Error	UUT Reading #2	Error
0.000	0.000	0.000	0.000	0.000	0.000
1.100	1.095	1.095	-0.005	1.095	-0.005
54.545	54.719	54.719	0.173	54.719	0.173
0.000	0.000	0.000	0.000	0.000	0.000

Expanded Uncertainty± **2.50 Megaohms**

Remarks:
100Mohm std Parallel with 120Mohm UUT= 54.545Mohms

We sincerely thank you for your business. Please call us at 503-654-9620 for all your sales and calibration needs.
Cleaning and preventative maintenance were performed as part of this service.

This certificate is hereby issued that the above instrument was tested for accuracy with calibrated standards traceable to the National Institute of Standards and Technology (NIST). The information provided on this form complies with the data gathering and reporting requirements of ANSI/NCSL Z540.1, and meets the requirements of all applicable references and Cal-Cert procedures listed above.
Any stated measurement uncertainty includes the uncertainty of the Calibration standards used, combined with the uncertainty of the measurement process using the RSS method with a k=2 for an approximate 95% level of confidence. The calibration process meets or exceeds a ratio of 4:1 unless otherwise stated.
All tolerances were derived from the applicable standards and pass/fail determination is based on those tolerances. The customer determined any recommended due dates indicated on the certificate.

This report shall not be reproduced except in full, without written approval from Cal-Cert.

Service Engineer: Brent Enbysk **Date:** August 9, 2023

Technical Manager: Marshall Doyle **Signature:** MDoyle

Copyright 2013 Cal-Cert. All rights reserved.

DICK MUNNS COMPANY
LIQUID & GAS FLOW CALIBRATION

ISO 17025:2017
ACCREDITED LABORATORY
Cert# CL-122

IAS ACCREDITED Calibration Laboratory

CERTIFICATE OF CALIBRATION

CUSTOMER:	**PFS-TECO :** CLACKAMAS, OR	**CALIBRATION DATE:**	05/23/2023
PO NUMBER:	1097	**CALIBRATION DUE:**	05/23/2024
INST. MANUFACTURER:	DWYER	**PROCEDURE:**	T.O.33K6-4-1769-1
INST. DESCRIPTION:	VELOMETER	**CALIBRATION FLUID:**	AIR @ 14.7 PSIA 70°F
MODEL NUMBER:	471	**RECEIVED CONDITION:**	WITHIN MFG. SPECS.
SERIAL NUMBER:	CP288559 ID# 095	**LEFT CONDITION:**	WITHIN MFG. SPECS.
RATED ACCURACY:	SEE NOTES BELOW.	**AMBIENT CONDITIONS:**	763mm HGA 53% RH 71°F
UNCERTAINTY GIVEN:	± 0.43% RD ; k=2	**CERTIFICATE FILE #:**	490265.2023

NOTES: ± 3.0% FS (0-500 / 0-1500) ** ± 4.0% F.S. (0-5000) **± 5.0% F.S. (0-15000) ** ± 2 °F

Q.MANUAL IM 2.0 REV 2020.2 DATED 7-27-2020

DECISION RULE: SIMPLE ACCEPTANCE. MEASUREMENT UNCERTAINTIES NOT TAKEN INTO CONSIDERATION WHEN DETERMINING PASS/FAIL

UUT INDICATED FT/MIN	DM.STD. ACTUAL FT/MIN	UUT INDICATED DEG. F	DM STD. ACTUAL DEG. F
74	77	0 TO 200°F	0 TO 200°F
118	121	45.0	44.5
253	259	73.9	73.2
491	502	100.3	99.8
515	525		
1028	1049		
1492	1526		
502	514		
3145	3224		
4993	5135		
6892	7061		
14821	15229		

STANDARDS USED:		
A310: TEMP. STANDARD | ± 0.024 F | TRACE# 1649766843	DUE	02/09/2024
A800: FLOW-DYNE SONIC NOZZLE SYSTEM | 0 – 1086 CFM ± 0.46% RD. | TRACE# 144613547, 1424683640, 1583314714	DUE	12/10/2023

All instruments used in the performance of the shown calibration have traceability to the National Institute of Standards and Technology (NIST). The uncertainty ratio between the calibration standards (DM.STD.) and the Unit Under Test (UUT) is a minimum of 4:1, unless otherwise noted. Calibration has been performed according to the shown procedure. The use of IAS/ILAC logo indicates calibrations are in accordance to ISO/IEC 17025:2017.

Dick Munns Company · 11133 Winners Circle, Los Alamitos, CA 90720
Phone: 714-827-1215 · www.dickmunns.com

This Calibration Certificate shall not be reproduced except, in full, without approval by Dick Munns Company. The data shown applies only to the instrument being calibrated and under the stated conditions of calibration.

Issuing Date: 5-23-2023

Approved By:

Cal. Technician: DC

Calibrated at: ✓ Lab
___ On-Site (Customer's)

QUALITY CONTROL SERVICES

Established 1974

LABORATORY EQUIPMENT • SALES • SERVICE • CALIBRATION • REPAIRS

2340 SE 11TH Ave. Portland, Oregon 97214 • Box 14831 Portland, Oregon 97293

(503) 236-2712 • FAX (503) 235-2535 • www.qc-services.com

A2LA ACCREDITED

CERTIFICATE #1550.01

PFS Teco
11785 SE Hwy 212 STE#305
Clackamas, OR 97015

Report Number: DIRI0134307497221214

A2LA ACCREDITED
CERTIFICATE OF CALIBRATION WITH DATA

INSTRUMENT INFORMATION

Item	Make	Model	Serial Number	Customer ID	Location
Balance	Sartorius	ENTRIS224-1S	34307497	#107	Lab
Units	**Readability**	**SOP**	**Cal Date**	**Last Cal Date**	**Cal Due Date**
g	0.0001	QC012	12/14/22	6/9/22	12/2023

FUNCTIONAL CHECKS

ECCENTRICITY

Test Wt: 100 Tol: 0.0003

As-Found: Pass: ☑ Fail: ☐

As-Left: Pass: ☑ Fail: ☐

LINEARITY

Test Wt: 50 x 4 Tol: 0.0002

As-Found: Pass: ☑ Fail: ☐

As-Left: Pass: ☑ Fail: ☐

STANDARD DEVIATION

Test Wt: 100 Tol: 0.0001

1. 100.0002 5. 1000.0003 9. 1000.0003
2. 1000.0001 6. 1000.0002 10. 1000.0002
3. 1000.0002 7. 1000.0002
4. 1000.0002 8. 1000.0003

Result 284.60499

ENVIRONMENTAL CONDITIONS

☐ Good ☑ Fair ☐ Poor

Temperature: 20.6°C

A2LA ACCREDITED SECTION OF REPORT

Standard	As-Found	As-Left	Expanded Uncertainty
200	200.0009	200.0004	569.20999
100	100.0005	100.0002	569.20999
50	50.0004	50.0001	569.20999
20	20.0003	20.0000	569.20999
1	1.0001	1.0000	569.20999
0.1	0.1001	0.1000	569.20999

CALIBRATION STANDARDS

Item	Make	Model	Serial Number	Cal Date	Cal Due Date	NIST ID
Weight Set	Rice Lake	20 kg to 1mg	2831W	3/1/22	3/2023	20220382

Permanent Information Concerning this Equipment:

6 month calibration cycle
1/22 Extra checkpoint to encapsulate user range 0.05g.
AF= 0.0500g A/L= 0.0500

Comments/Info Concerning this Calibration:

12/22 RH= 45%. Adjusted span.

Report prepared/reviewed by: JC **Date:** 12/14/22 **Technician:** J. Colacchio

Signature:

THIS CERTIFICATE SHALL NOT BE REPRODUCED WITHOUT THE APPROVAL OF QUALITY CONTROL SERVICES, INC.

The uncertainty is calculated according to the ISO Guide to the Expression of Uncertainty in Measurement and includes the uncertainty of standards used combined with the observed standard deviation and readability of the unit under test. The uncertainty is expanded with a k factor of 2 for an approximate 95% level of confidence. Instruments listed above were calibrated using standards traceable to the National Institute of Standards and Technology (NIST). Calibration data reflect results at the time and location of calibration. Calibration data should be reviewed to insure that the instrument is performing to its required accuracy. Calibrations comply with ISO/IEC 17025 and ANSI/Z540-1-1994 quality standards.

Report and Certificate of Calibration

CAL-CERT CALIBRATION CERTIFICATION

www.Cal-Cert.com

Toll Free 800-356-4662

Address 5777 SE International Way Milwaukie, OR 97222

Local 503-654-9620

ACCREDITED CERT #4986.01

Report #:	31538-218157-14	**Customer PO#:**	
Customer Name:	PFS TECO		
Customer Address:	11785 SE Highway 212, Suite 305		
City:	Clackamas	**State:** OR	**Zip:** 97015
Contact:	Aaron Kravitz		
Service Address:	11785 SE Highway 212, Suite 305	Clackamas, OR 97015	

Calibration Standards

10-00209 | Weight | Rice Lake | SN: 43334 | Cal: 02/02/2022 | Due: 02/28/2024 | Vendor: Oregon Dept of Ag | Report #: 20220092
19-00269 | Thermo-Hygrometer | Comark | SN: 6237360167 | Cal: 08/14/2023 | Due: 08/31/2024 | Vendor: Cal-Cert | Range: 122 °F 95 %RH | Report #: 30530-30694-3646

Instrument Data

Calibration Date:	October 12, 2023	**Reference:**	ASTM E898-20, D4753-15
Calibration Due Date:	April 12, 2024	**Cal-Cert Procedure:**	CP-002
Calibration Frequency:	6 Months	**Indicating System:**	Digital
Manufacturer:	Sartorius	**Temperature:**	73 °F
Model Number:	ENTRIS224	**Humidity:**	52% RH
Type:	Digital Balance	**Asset #:**	107
Serial #:	34307497	**Service Location:**	Service Address
Scale Capacity:	200 grams	**As Found:**	PASS
		As Left:	PASS

Scale Linear Test

Instrument Range: 200.0000 grams **Resolution:** 0.0001 grams

Calibration Standard grams	As Found UUT grams	As Found Error grams	As Left UUT grams	As Left Error grams	As Left % of Error	Tolerance (As Left) Allowable Error		
						Error	Condition	Expanded Unc. (grams)
0.0000	0.0000	0.0000	0.0000	0.0000	0.00	0.0000	PASS	0.00000
20.0000	19.9998	-0.0002	19.9998	-0.0002	0.00	0.0200	PASS	0.00463
40.0000	39.9997	-0.0003	40.0000	0.0000	0.00	0.0400	PASS	0.00924
60.0000	59.9996	-0.0004	60.0001	0.0001	0.00	0.0600	PASS	0.01386
80.0000	79.9995	-0.0005	80.0001	0.0001	0.00	0.0800	PASS	0.01848
100.0000	99.9994	-0.0006	99.9999	-0.0001	0.00	0.1000	PASS	0.02310
120.0000	119.9993	-0.0007	119.9999	-0.0001	0.00	0.1200	PASS	0.02771
140.0000	139.9991	-0.0009	140.0000	0.0000	0.00	0.1400	PASS	0.03233
160.0000	159.9990	-0.0010	160.0001	0.0001	0.00	0.1600	PASS	0.03695
180.0000	179.9990	-0.0010	180.0000	0.0000	0.00	0.1800	PASS	0.03926
200.0000	199.9989	-0.0011	200.0000	0.0000	0.00	0.2000	PASS	0.04619
100.0000	99.9994	-0.0006	99.9999	-0.0001	0.00	0.1000	PASS	0.02310
0.0000	0.0000	0.0000	0.0000	0.0000	0.00	0.0000	PASS	0.00000

Copyright 2013 Cal-Cert. All rights reserved.

Manufacturer: Sartorius **Type:** Digital Balance **Serial #:** 34307497

FUNCTIONAL CHECKS					
ECCENTRIC LOAD TEST:		**HYSTERESIS: Load Increments**		**REPEATABILITY:**	
Loading position	100.0000	Test Weight Applied. % of load	Readings	Test Weight Applied	100.0000
Right	99.9999	0%	0.0000	1st	99.9999
Left	99.9998	(R1) 50%	99.9999	2nd	100.0000
Front	99.9998	100%	200.0000	3rd	99.9999
Back	99.9999	(R2)50%	99.9999	4th	100.0000
Center	99.9999	0%	0.0000	5th	100.0000
As Left	PASS	As Left	PASS	As Left	PASS
Tolerance: The maximum error of the eccentric loading must be less than .1% of center load value.		Tolerance: The Difference of R1 and R2 must be within 0.1%		Tolerance: Deviation of lowest and highest reading within 0.1%	

Remarks:

The scale was adjusted prior to taking the As Left readings.

We sincerely thank you for your business. Please call us at 503-654-9620 for all your sales and calibration needs.
Cleaning and preventative maintenance were performed as part of this service.

Cal-Cert is accredited by A2LA under Calibration Laboratory Code #4986.01.
A2LA is recognized under the ILAC mutual recognition agreement (MRA).

This certificate is hereby issued that the above instrument was tested for accuracy with calibrated standards traceable to the National Institute of Standards and Technology (NIST). The information provided on this form complies with the data gathering and reporting requirements of ISO/IEC 17025 and ANSI/NCSL Z540.1, and meets the requirements of all applicable references and Cal-Cert procedures listed above.
Any stated measurement uncertainty includes the uncertainty of the Calibration standards used, combined with the uncertainty of the measurement process using the RSS method with a k=2 for an approximate 95% level of confidence. The calibration process meets or exceeds a ratio of 4:1 unless otherwise stated. All tolerances were derived from the applicable standards and pass/fail determination is based on those tolerances. The customer determined any recommended due dates indicated on the certificate.

This report shall not be reproduced except in full, without written approval from Cal-Cert.

Service Engineer: Jon Rau **Date:** October 12, 2023

Technical Manager: Marshall Doyle **Signature:** MDoyle

REPORT#: 31538-218157-14

Copyright 2013 Cal-Cert. All rights reserved.

Established 1974

QUALITY CONTROL SERVICES

LABORATORY EQUIPMENT • SALES • SERVICE • CALIBRATION • REPAIRS
2340 SE 11TH Ave. Portland, Oregon 97214 • Box 14831 Portland, Oregon 97293
(503) 236-2712 • FAX (503) 235-2535 • www.qc-services.com

ACCREDITED
CERTIFICATE #1550.01

Report of Calibration

Firm: PFS-TECO
Address: 11785 SE Hwy 212, Ste 305
City/State/Zip: Clackamas, OR 97015

Test Completed: 05/09/22
Purchase Order: 1067
Traceable Number: 20220682

Test Item: 200 mg and 100 mg Individual Weights
Serial No.: Listed in Table

Manufacturer: Troemner
Customer ID: Listed in Table

Material	Assumed Density	Range	Tolerance Class
Stainless Steel	7.95 g/cm^3	200 mg & 100 mg	ASTM Class 1

Method and Traceability
The procedure used for this calibration is NIST IR 6969 SOP 4 Double Substitution Weighing Design. Standards used for comparison are traceable to the National Institute of Standards and Technology (reports on file) and are part of a comprehensive measurement assurance program for ensuring continued accuracy and traceability within the level of uncertainty reported. The Traceable Number listed above is Traceable to National Standards through an unbroken chain of comparison each having stated uncertainties.

Standards Used:
100 g to 1 mg Working Standards Were Calibrated: 07/02/21 Due: 07/31/22 Standards ID: 723318
Mass Comparators Used: MET-05 **Tested by:** D. Thompson

Conventional Mass: "The conventional value of the result of weighing a body in air is equal to the mass of a standard, of conventionally chosen density, at a conventionally chosen temperature, which balances this body at this reference temperature in air of conventionally chosen density. International Recommendation 33 (OIML IR 33 1973, 1979). "Conventional Value of the Result of Weighing in Air" **(Previously known as "Apparent Mass vs. 8.0 g/cm^3).**

Uncertainty Statement: The uncertainty conforms to the ISO Guide to the Expressions of Uncertainty in Measurement. Uncertainty as reported is based on a coverage factor k=2 for an approximate 95 percent level of uncertainty. Uncertainty components include the standard deviation of the process, the uncertainty of the standard used, an uncertainty component associated with the potential drift of the standard used, and the estimated uncertainty related to measuring and determining the air buoyancy effect.

Conventional Mass Values are listed on page 2 of this report.

Quality Control Services, Inc.
Metrology Laboratory Manager
E-mail dthompson@qc-services.com

Date: 05/09/22

Signature David S. Thompson

This document shall not be reproduced, except in full, without the written approval of Quality Control Services Mass Laboratory.

Member: National Conference of Standards Laboratories and Weights & Measures

Established 1974

QUALITY CONTROL SERVICES

LABORATORY EQUIPMENT • SALES • SERVICE • CALIBRATION • REPAIRS
2340 SE 11TH Ave. Portland, Oregon 97214 • Box 14831 Portland, Oregon 97293
(503) 236-2712 • FAX (503) 235-2535 • www.qc-services.com

ACCREDITED
CERTIFICATE #1550.01

Report of Calibration

Firm: PFS-TECO
Address: 11785 SE Hwy 212, Ste 305
City/State/Zip: Clackamas, OR 97015

Test Completed: 05/09/22
Purchase Order: 1067
Traceable Number: 20220682

Test Item: 200 mg and 100 mg Individual Weights
Serial No.: Listed in Table

Manufacturer: Troemner
Customer ID: Listed in Table

Laboratory Environment at time of test

Temperature °C	Pressure mmHg	Humidity %RH
21.93 to 21.94	760.7 to 760.8	47.8 to 47.9

Conventional Mass Value

Nominal Value	As Found Value (g)	As Found Correction* (mg)	As Left Value (g)	As Left Correction* (mg)	Uncertainty (mg)	Tolerance (mg)
200 mg, 1000101395, #109-B	0.2000082	0.0082	0.2000082	0.0082	0.0014	0.010
100 mg, 1000126267, #109-A	0.1000065	0.0065	0.1000065	0.0065	0.0014	0.010

*Correction is the difference between the conventional mass value of a weight and its nominal value.

Comments: These weights were received in good condition and were within ASTM Class 1 tolerances As Found.

Recalibration Due: The customer has requested a 5-year calibration cycle. The calibration due date for these weights is 05/09/27. The values listed above were found at the time of calibration. Any number of factors may cause these items to drift out of calibration before the calibration interval has expired.

Accredited by the American Association for Laboratory Accreditation (A2LA) under Calibration Laboratory Code 115953 and Certificate Number 1550.01. This laboratory meets the requirements of ISO/IEC 17025:2017 *General Requirements for the Competence of Testing and Calibration Laboratories.* This laboratory also meets the requirements of ANSI/NCSL Z540-1-1994 and any additional program requirements in the field of calibration.

Quality Control Services, Inc.
Metrology Laboratory Manager
E-mail dthompson@qc-services.com

Date: 05/09/22

Signature David S. Thompson

This document shall not be reproduced, except in full, without the written approval of Quality Control Services Mass Laboratory.

Member: National Conference of Standards Laboratories and Weights & Measures

QUALITY CONTROL SERVICES

Established 1974

LABORATORY EQUIPMENT • SALES • SERVICE • CALIBRATION • REPAIRS

2340 SE 11TH Ave. Portland, Oregon 97214 • Box 14831 Portland, Oregon 97293

(503) 236-2712 • FAX (503) 235-2535 • www.qc-services.com

A2LA ACCREDITED

CERTIFICATE #1550.01

PFS Teco
11785 SE Hwy 212 STE#305
Clackamas, OR 97015

Report Number: DIRI01C101887027221214

A2LA ACCREDITED
CERTIFICATE OF CALIBRATION WITH DATA

INSTRUMENT INFORMATION

Item	Make	Model	Serial Number	Customer ID	Location
Scale	Mettler	IND570 - 1000lbx0	C101887027	#189	Lab
Units	**Readability**	**SOP**	**Cal Date**	**Last Cal Date**	**Cal Due Date**
lbs	0.02	QC033	12/14/22	1/27/22	12/2023

FUNCTIONAL CHECKS

SHIFT TEST	LINEARITY	REPEATABILITY	ENVIRONMENTAL CONDITIONS
Test Wt: 400 / Tol: 0.10	Test Wt: HB44 / Tol: HB44	Test Wt: 200 / Tol: 0.04	☐ Good ☑ Fair ☐ Poor
As-Found: Pass:☑ Fail:☐	As-Found: Pass:☑ Fail:☐	As-Found: Pass:☑ Fail:☐	Temperature: 16.7°C
As-Left: Pass:☑ Fail:☐	As-Left: Pass:☑ Fail:☐	As-Left: Pass:☑ Fail:☐	

CALIBRATION DATA

Standard	As-Found	As-Left	Expanded Uncertainty
1000	1000.84	1000.02	0.012
600	600.32	600.00	0.011
400	400.10	400.00	0.011
200	200.00	199.98	0.011
100	100.00	99.98	0.011
50	50.00	50.00	0.011

CALIBRATION STANDARDS

Item	Make	Model	Serial Number	Cal Date	Cal Due Date	NIST ID
Avoirdupois Cast W	Rice Lake	25 and 50lb	PWO990-CA	7/18/22	7/2024	20221688

Permanent Information Concerning this Equipment:

Comments/Information Concerning this Calibration

12/14 As-Found Failed Linearity. Performed 3 point Linearity adjustment. As-Left Passed Linearity. Adjusted span.

Report prepared/reviewed by: JC **Date:** 12/14/22 **Technician:** J. Colacchio **Signature:**

THIS CERTIFICATE SHALL NOT BE REPRODUCED, EXCEPT IN FULL, WITHOUT THE APPROVAL OF QUALITY CONTROL SERVICES, INC.

The uncertainty is calculated according to the ISO Guide to the Expression of Uncertainty in Measurement and includes the uncertainty of standards used combined with the observed standard deviation of the unit under test. The uncertainty is expanded with a k factor of 2 for an approximate 95% level of confidence. Instruments listed above were calibrated using standards traceable to the National Institute of Standards and Technology (NIST). Calibration data reflect results at the time and location of calibration. Calibration data should be reviewed to insure that the instrument is performing to its required accuracy.

QUALITY CONTROL SERVICES

Established 1974

LABORATORY EQUIPMENT • SALES • SERVICE • CALIBRATION • REPAIRS
2340 SE 11TH Ave. Portland, Oregon 97214 • Box 14831 Portland, Oregon 97293
(503) 236-2712 • FAX (503) 235-2535 • www.qc-services.com

A2LA ACCREDITED
CERTIFICATE #1550.01

PFS Teco
11785 SE Hwy 212 STE#305
Clackamas, OR 97015

Report Number: DIRI01C101887027231228

A2LA ACCREDITED
CERTIFICATE OF CALIBRATION WITH DATA

INSTRUMENT INFORMATION

Item	Make	Model	Serial Number	Customer ID	Location
Scale	Mettler	IND570 - 1000lbx0.	C101887027	#189	Lab
Units	**Readability**	**SOP**	**Cal Date**	**Last Cal Date**	**Cal Due Date**
lbs	0.02	QC033	12/28/23	12/14/22	12/2024

FUNCTIONAL CHECKS

SHIFT TEST	LINEARITY	REPEATABILITY	ENVIRONMENTAL CONDITIONS
Test Wt: 400 / Tol: 0.10	Test Wt: HB44 / Tol: HB44	Test Wt: 200 / Tol: 0.04	☐ Good ☑ Fair ☐ Poor
As-Found: Pass:☑ Fail:☐	As-Found: Pass:☑ Fail:☐	As-Found: Pass:☑ Fail:☐	Temperature: 18.2°C
As-Left: Pass:☑ Fail:☐	As-Left: Pass:☑ Fail:☐	As-Left: Pass:☑ Fail:☐	

CALIBRATION DATA

Standard	As-Found	As-Left	Expanded Uncertainty
1000	999.98	999.98	0.012
600	599.98	599.98	0.011
400	399.96	399.96	0.011
200	200.00	200.00	0.011
100	100.00	100.00	0.011
50	50.00	50.00	0.011

CALIBRATION STANDARDS

Item	Make	Model	Serial Number	Cal Date	Cal Due Date	NIST ID
Avoirdupois Cast W	Rice Lake	25 and 50lb	PWO990-CA	7/18/22	7/2024	20221688

Permanent Information Concerning this Equipment:

Comments/Information Concerning this Calibration

12/23 RH = 40.5%

Report prepared/reviewed by: R.B. **Date:** 12-28-23 **Technician:** R. Butcher **Signature:** R. Butcher

THIS CERTIFICATE SHALL NOT BE REPRODUCED, EXCEPT IN FULL, WITHOUT THE APPROVAL OF QUALITY CONTROL SERVICES, INC.

The uncertainty is calculated according to the ISO Guide to the Expression of Uncertainty in Measurement and includes the uncertainty of standards used combined with the observed standard deviation of the unit under test. The uncertainty is expanded with a k factor of 2 for an approximate 95% level of confidence. Instruments listed above were calibrated using standards traceable to the National Institute of Standards and Technology (NIST). Calibration data reflect results at the time and location of calibration. Calibration data should be reviewed to insure that the instrument is performing to its required accuracy. Calibrations comply with ISO/IEC 17025 and ANSI/Z540-1-1994 quality standards.

Member: National Conference of Standards Laboratories and Weights & Measures

PT ID: DIRI01

Report and Certificate of Calibration

CAL-CERT CALIBRATION CERTIFICATION

www.Cal-Cert.com

Toll Free 800-356-4662

Address 5777 SE International Way Milwaukie, OR 97222

Local 503-654-9620

A2LA ACCREDITED CERT #4986.01

Report #: 32102-201251-4686 **Customer PO#:** 1102
Customer Name: PFS TECO
Customer Address: 11785 SE Highway 212, Suite 305
City: Clackamas **State:** OR **Zip:** 97015
Contact: Ethan Frederick
Service Address: 5777 SE International Way Milwaukie, OR 97222

Calibration Standards

10-00954 | Gage Block Set | Shars | SN: 120018 | Cal: 05/26/2023 | Due: 05/26/2025 | Vendor: American Gage | Report #: 109141
LP-00397 | Gage Block Set | Mitutoyo | SN: 509020 | Cal: 12/28/2022 | Due: 12/28/2024 | Vendor: BHD Test and Measurement | Report #: 99826
LP-01757 | Thermo-Hygrometer | Comark | SN: 06257740560 | Cal: 04/28/2023 | Due: 04/28/2024 | Report #: 29096-209333-4201

Instrument Data

Calibration Date:	December 6, 2023	**Reference:**	Manufacturer's Spec
Calibration Due Date:	December 6, 2024	**Cal-Cert Procedure:**	CP-115
Calibration Frequency:	12 Months	**Indicating System:**	Stamped
Manufacturer:	Starrett	**Temperature:**	69 °F
Type:	Tape Measure	**Humidity:**	51% RH
Model Number:	Exact	**Asset #:**	207
Serial #:	138054-2203-00002249	**Service Location:**	Cal-Cert Lab
Capacity:	192.00 Inches	**As Found:**	Pass
		As Left:	Pass

Instrument Range: 192.000 Inches **Range Resolution:** 0.06250 Inches

Calibration Standard	As Found Reading	Verification Reading #1	Verification Reading #2
0.2500	0.2500	0.2500	0.2500
1.0000	1.0000	1.0000	1.0000
6.0000	6.0000	6.0000	6.0000
12.0000	12.0000	12.0000	12.0000
64.0000	64.0000	64.0000	64.0000
128.0000	128.0000	128.0000	128.0000
192.0000	192.0000	192.0000	192.0000

Expanded Uncertainty ± 0.07217 Inches

Remarks:

Metric scale not calibrated.

We sincerely thank you for your business. Please call us at 503-654-9620 for all your sales and calibration needs.
Cleaning and preventative maintenance were performed as part of this service.

Cal-Cert is accredited by A2LA under Calibration Laboratory Code #4986.01.
A2LA is recognized under the ILAC mutual recognition agreement (MRA).

This certificate is hereby issued that the above instrument was tested for accuracy with calibrated standards traceable to the National Institute of Standards and Technology (NIST). The information provided on this form complies with the data gathering and reporting requirements of ISO/IEC 17025 and ANSI/NCSL Z540.1, and meets the requirements of all applicable references and Cal-Cert procedures listed above.
Any stated measurement uncertainty includes the uncertainty of the Calibration standards used, combined with the uncertainty of the measurement process using the RSS method with a k=2 for an approximate 95% level of confidence. The calibration process meets or exceeds a ratio of 4:1 unless otherwise stated.
All tolerances were derived from the applicable standards and pass/fail determination is based on those tolerances. The customer determined any recommended due dates indicated on the certificate.

This report shall not be reproduced except in full, without written approval from Cal-Cert.

Service Engineer: Scott McGuire **Date:** December 6, 2023

Technical Manager: Marshall Doyle **Signature:** MDoyle

Dimensional Measurement CF-115-01

Copyright 2013 Cal-Cert. All rights reserved.

Revision 7 **7/25/2017**

Report and Certificate of Calibration

CAL-CERT CALIBRATION CERTIFICATION

www.Cal-Cert.com

Toll Free 800-356-4662

Address 5777 SE International Way Milwaukie, OR 97222

Local 503-654-9620

A2LA ACCREDITED CERT #4986.01

Report #:	31621-201253-5	**Customer PO#:** 1102	
Customer Name:	PFS TECO		
Customer Address:	11785 SE Highway 212, Suite 305		
City:	Clackamas	**State:** OR	**Zip:** 97015
Contact:	Ethan Frederick		
Service Address:	5777 SE International Way Milwaukie, OR 97222		

Calibration Standards

LP-00397 | Gage Block Set | Mitutoyo | SN: 509020 | Cal: 12/28/2022 | Due: 12/28/2024 | Vendor: BHD Test and Measurement | Report #: 99826
LP-01782 | Thermo-Hygrometer | Comark | SN: 06247790052 | Cal: 01/30/2023 | Due: 01/31/2024 | Range: 122 °F 95 %RH | Report #: 27747-205513-4239

Instrument Data

Calibration Date:	October 23, 2023	**Reference:**	ASME B89.1.14 2018
Calibration Due Date:	October 23, 2024	**Cal-Cert Procedure:**	CP-008
Calibration Frequency:	12 Months	**Indicating System:**	Digital
Manufacturer:	Mitutoyo	**Temperature:**	66 °F
Type:	Digital Caliper	**Humidity:**	51% RH
Model Number:	CD-P6"S	**Asset #:**	208
Serial #:	B22159310	**Service Location:**	Cal-Cert Lab
Capacity:	6 Inches	**As Found:**	PASS
Resolution:	0.0005 Inches	**As Left:**	PASS

Instrument Range: 6.0000 Inches **Range Resolution:** 0.0005 Inches

Outside Jaws / Linearity

Calibration Standard Inches	As Found Inches	As Left Reading 1 Inches	As Left Reading 2 Inches	Tolerance ± Inches
0.0000	0.0000	0.0000	0.0000	0.0000
0.0500	0.0495	0.0495	0.0495	0.0010
0.3000	0.3000	0.3000	0.3000	0.0010
0.6000	0.6000	0.6000	0.6000	0.0010
1.2000	1.1995	1.1995	1.1995	0.0010
2.4000	2.4000	2.4000	2.4000	0.0010
3.5000	3.5000	3.5000	3.5000	0.0010
5.0000	5.0000	5.0000	5.0000	0.0010
6.0000	5.9995	5.9995	5.9995	0.0010

Expanded Uncertainty ± 0.00036 Inches

Scale Shift Verification

	Target	Measured	Tolerance ±
Resolution Check	0.1005	0.10050	N/A
Depth	1.000	1.00000	0.001
Step	1.000	1.00000	0.001
Inside Jaws	1.000	0.99950	0.001

Inspections

Jaws Parallel	Acceptable

Remarks:

We sincerely thank you for your business. Please call us at 503-654-9620 for all your sales and calibration needs.
Cleaning and preventative maintenance were performed as part of this service.

Cal-Cert is accredited by A2LA under Calibration Laboratory Code #4986.01.
A2LA is recognized under the ILAC mutual recognition agreement (MRA).

This certificate is hereby issued that the above instrument was tested for accuracy with calibrated standards traceable to the National Institute of Standards and Technology (NIST). The information provided on this form complies with the data gathering and reporting requirements of ISO/IEC 17025 and ANSI/NCSL Z540.1, and meets the requirements of all applicable references and Cal-Cert procedures listed above.
Any stated measurement uncertainty includes the uncertainty of the Calibration standards used, combined with the uncertainty of the measurement process using the RSS method with a k=2 for an approximate 95% level of confidence. The calibration process meets or exceeds a ratio of 4:1 unless otherwise stated.
All tolerances were derived from the applicable standards and pass/fail determination is based on those tolerances. The customer determined any recommended due dates indicated on the certificate.

This report shall not be reproduced except in full, without written approval from Cal-Cert.

Service Engineer:	Cameron Walling	**Date:**	October 23, 2023
Technical Manager:	Marshall Doyle	**Signature:**	MDoyle

Caliper CF-008-01 **Revision 17** **6/30/2023**

Copyright 2013 Cal-Cert. All rights reserved.

Thermocouple Readout Calibration

DUT	
Manufacturer:	National Instruments
Model:	NI 9213
Lab ID #:	215
Serial #:	1B182FB
Calibration Date:	10/13/2023
Calibration Expiration:	4/13/2024
Barometric Pressure:	29.62 in. Hg

Equipment Used:	Ref. Std. TC Signal Generator
Manufacturer:	Omega
Model:	CL23A
Lab ID#:	165
Cal. Expiration Date:	11/29/2023

Calibrate in accordance with EA-10/11 • EA Guidelines on the Calibration of Temperature Indicators and Simulators by Electrical Simulation and Measurement. Use procedure specified for thermocouple indicators without cold junction compensation.

Use only calibrated, NIST traceable reference standard signal generator.

Stated uncertainty calcuated with RSS method with k=2 for a 95% confidence interval.

Channel	Std. TC Signal	DUT	Error	Expanded Uncertainty
	0	1.4	1.4	
	500	501.1	1.1	
Tunnel	1000	1001	1	0.906
Type K	1500	1500.8	0.8	
	2000	2000.5	0.5	

Channel	Std. TC Signal	DUT	Error	Expanded Uncertainty
	0	1	1	
	500	500.7	0.7	
Flue	1000	1000.7	0.7	0.906
Type K	1500	1500.4	0.4	
	2000	2000.3	0.3	

Channel	Std. TC Signal	DUT	Error	Expanded Uncertainty
	0	0.9	0.9	
	500	500.8	0.8	
Filter A	1000	1000.6	0.6	0.906
Type K	1500	1500.4	0.4	
	2000	2000.2	0.2	

Channel	Std. TC Signal	DUT	Error	Expanded Uncertainty
	0	0.8	0.8	
	500	501.9	1.9	
Filter B	1000	1001.3	1.3	0.906
Type K	1500	1500.9	0.9	
	2000	2000.4	0.4	

Channel	Std. TC Signal	DUT	Error	Expanded Uncertainty
	0	0.7	0.7	
	500	500.5	0.5	
Filter C	1000	1000.4	0.4	0.906
Type K	1500	1500.2	0.2	
	2000	2000.1	0.1	

 Technician:

Thermocouple Readout Calibration

DUT	
Manufacturer:	National Instruments
Model:	NI 9213
Lab ID #:	215
Serial #:	1B182FB
Calibration Date:	10/13/2023
Calibration Expiration:	4/13/2024
Barometric Pressure:	29.62 in. Hg

Equipment Used:	Ref. Std. TC Signal Generator
Manufacturer:	Omega
Model:	CL23A
Lab ID#:	165
Cal. Expiration Date:	11/29/2023

Calibrate in accordance with EA-10/11 • EA Guidelines on the Calibration of Temperature Indicators and Simulators by Electrical Simulation and Measurement. Use procedure specified for thermocouple indicators without cold junction compensation.

Use only calibrated, NIST traceable reference standard signal generator.

Stated uncertainty calcuated with RSS method with k=2 for a 95% confidence interval.

Channel	Std. TC Signal	DUT	Error	Expanded Uncertainty
	0	0.6	0.6	
	500	500.4	0.4	
Meter A	1000	1000.3	0.3	0.906
Type K	1500	1500.2	0.2	
	2000	1999.9	0.1	

Channel	Std. TC Signal	DUT	Error	Expanded Uncertainty
	0	1	1	
	500	500.7	0.7	
Meter B	1000	1000.6	0.6	0.906
Type K	1500	1500.5	0.5	
	2000	2000.2	0.2	

Channel	Std. TC Signal	DUT	Error	Expanded Uncertainty
	0	0.4	0.4	
	500	500.3	0.3	
Meter C	1000	1000.1	0.1	0.906
Type K	1500	1499.9	0.1	
	2000	1999.6	0.4	

Channel	Std. TC Signal	DUT	Error	Expanded Uncertainty
	0	0.7	0.7	
	500	500.5	0.5	
FB Top	1000	1000.3	0.3	0.906
Type K	1500	1500.1	0.1	
	2000	2000	0	

Channel	Std. TC Signal	DUT	Error	Expanded Uncertainty
	0	0.9	0.9	
	500	500.6	0.6	
FB Bottom	1000	1000.5	0.5	0.906
Type K	1500	1500.4	0.4	
	2000	2000.2	0.2	

 Technician: _____

Thermocouple Readout Calibration

DUT	
Manufacturer:	National Instruments
Model:	NI 9213
Lab ID #:	215
Serial #:	1B182FB
Calibration Date:	10/13/2023
Calibration Expiration:	4/13/2024
Barometric Pressure:	29.62 in. Hg

Equipment Used:	Ref. Std. TC Signal Generator
Manufacturer:	Omega
Model:	CL23A
Lab ID#:	165
Cal. Expiration Date:	11/29/2023

Calibrate in accordance with EA-10/11 • EA Guidelines on the Calibration of Temperature Indicators and Simulators by Electrical Simulation and Measurement. Use procedure specified for thermocouple indicators without cold junction compensation.

Use only calibrated, NIST traceable reference standard signal generator.

Stated uncertainty calcuated with RSS method with k=2 for a 95% confidence interval.

Channel	Std. TC Signal	DUT	Error	Expanded Uncertainty
	0	0.9	0.9	
	500	500.7	0.7	
FB Back	1000	1000.4	0.4	0.906
Type K	1500	1500.2	0.2	
	2000	2000.1	0.1	

Channel	Std. TC Signal	DUT	Error	Expanded Uncertainty
	0	0.7	0.7	
	500	500.4	0.4	
FB Left	1000	1000.3	0.3	0.906
Type K	1500	1500.1	0.1	
	2000	1999.9	0.1	

Channel	Std. TC Signal	DUT	Error	Expanded Uncertainty
	0	0.6	0.6	
	500	500.4	0.4	
FB Right	1000	1000.2	0.2	0.906
Type K	1500	1500.2	0.2	
	2000	1999.9	0.1	

Channel	Std. TC Signal	DUT	Error	Expanded Uncertainty
	0	0.7	0.7	
	500	500.5	0.5	
Catalyst	1000	1000.4	0.4	0.906
Type K	1500	1500.2	0.2	
	2000	1999.9	0.1	

Channel	Std. TC Signal	DUT	Error	Expanded Uncertainty
	0	0	0	
	50	49.1	0.9	
Ambient	100	99.1	0.9	0.906
Type T	150	149.1	0.9	
	200	199.3	0.7	

Technician: _____

PRAXAIR
Making our planet more productive

DocNumber: 271687

Praxair Distribution, Inc.
5700 S. Alameda Street
Los Angeles CA 90058
Tel: 323-585-2154
Fax: 714-542-6689
PGVP ID: F22019

CERTIFICATE OF ANALYSIS / EPA PROTOCOL GAS

Customer & Order Information

PXPKG TUALATIN OR H
10450 SW TUALATIN SHERWOOD ROAD
TUALATIN OR 97062-9547

Certificate Issuance Date: 10/16/2019
Praxair Order Number: 71120745
Part Number: NI CD10CO33E-AS
Customer PO Number: 79106732

Fill Date: 10/08/2019
Lot Number: 70086928102
Cylinder Style & Outlet: AS CGA 590
Cylinder Pressure and Volume: 2000 psig 140 ft3

Certified Concentration

ProSpec EZ Cert

Expiration Date:	10/16/2027	NIST Traceable
Cylinder Number:	CC139173	Expanded Uncertainty
10.09 %	Carbon dioxide	± 0.4 %
2.53 %	Carbon monoxide	± 0.6 %
10.48 %	Oxygen	± 0.4 %
Balance	Nitrogen	

Certification Information:

Certification Date: 10/16/2019 *Term:* 96 Months *Expiration Date:* 10/16/2027

This cylinder was certified according to the 2012 EPA Traceability Protocol, Document #EPA-600/R-12/531, using Procedure G1.
Do Not Use this Standard if Pressure is less than 100 PSIG.
CO2 responses have been corrected for Oxygen IR Broadening effect. O2 responses have been corrected for CO2 interference.

Analytical Data:

(R=Reference Standard, Z=Zero Gas, C=Gas Candidate)

1. *Component:* **Carbon dioxide**

Requested Concentration: 10 %
Certified Concentration: 10.09 %
Instrument Used: Horiba VIA-510 S/N 20C194WK
Analytical Method: NDIR
Last Multipoint Calibration: 09/18/2019

First Analysis Data:							Date	10/16/2019
Z:	0	R:	14	C:	10.09	Conc:	10.09	
R:	14	Z:	0	C:	10.1	Conc:	10.1	
Z:	0	C:	10.1	R:	14.01	Conc:	10.1	
UOM:	%					Mean Test Assay:	10.09	%

Reference Standard: Type / Cylinder #: GMIS / CC164230
Concentration / Uncertainty: 14.00 % ±0.265%
Expiration Date: 04/16/2027
Traceable to: SRM # / Sample # / Cylinder #: SRM 1675b / 6-F-51 / CAL014538
SRM Concentration / Uncertainty: 13.963% / ±0.034%
SRM Expiration Date: 05/16/2022

Second Analysis Data:							Date	
Z:	0	R:	0	C:	0	Conc:	0	
R:	0	Z:	0	C:	0	Conc:	0	
Z:	0	C:	0	R:	0	Conc:	0	
UOM:	%					Mean Test Assay:		%

2. *Component:* **Carbon monoxide**

Requested Concentration: 2.5 %
Certified Concentration: 2.53 %
Instrument Used: Horiba VIA-510 S/N UB9UCSYX
Analytical Method: NDIR
Last Multipoint Calibration: 09/19/2019

First Analysis Data:							Date	10/16/2019
Z:	0	R:	5	C:	2.53	Conc:	2.53	
R:	5	Z:	0	C:	2.53	Conc:	2.53	
Z:	0	C:	2.54	R:	5.01	Conc:	2.54	
UOM:	%					Mean Test Assay:	2.53	%

Reference Standard: Type / Cylinder #: GMIS / CC242633
Concentration / Uncertainty: 5.00 % ±0.543%
Expiration Date: 04/03/2025
Traceable to: SRM # / Sample # / Cylinder #: SRM 2642a / 51-D-23 / FF23106
SRM Concentration / Uncertainty: 7.859% / ±0.039%
SRM Expiration Date: 07/15/2019

Second Analysis Data:							Date	
Z:	0	R:	0	C:	0	Conc:	0	
R:	0	Z:	0	C:	0	Conc:	0	
Z:	0	C:	0	R:	0	Conc:	0	
UOM:	%					Mean Test Assay:		%

3. *Component:* **Oxygen**

Requested Concentration: 10.5 %
Certified Concentration: 10.48 %
Instrument Used: OXYMAT 5E
Analytical Method: Paramagnetic
Last Multipoint Calibration: 09/18/2019

First Analysis Data:							Date	10/16/2019
Z:	0	R:	9.88	C:	10.49	Conc:	10.48	
R:	9.88	Z:	0	C:	10.49	Conc:	10.48	
Z:	0	C:	10.5	R:	9.89	Conc:	10.49	
UOM:	%					Mean Test Assay:	10.48	%

Reference Standard: Type / Cylinder #: NTRM / DT0010384
Concentration / Uncertainty: 9.875 % ±0.4%
Expiration Date: 11/18/2022
Traceable to: SRM # / Sample # / Cylinder #: NTRM / 170701 / NTRM DT0010384
SRM Concentration / Uncertainty: 9.875% / ±0.040%
SRM Expiration Date: 11/18/2022

Second Analysis Data:							Date	
Z:	0	R:	0	C:	0	Conc:	0	
R:	0	Z:	0	C:	0	Conc:	0	
Z:	0	C:	0	R:	0	Conc:	0	
UOM:	%					Mean Test Assay:		%

Analyzed By Jose Vasquez

Certified By Jenna Lockman

Information contained herein has been prepared at your request by qualified experts within Praxair Distribution, Inc. While we believe that the information is accurate within the limits of the analytical methods employed and is complete to the extent of the specific analyses performed, we make no warranty or representation as to the suitability of the use of the information for any purpose. The information is offered with the understanding that any use of the information is at the sole discretion and risk of the user. In no event shall the liability of Praxair Distribution, Inc., arising out of the use of the information contained herein exceed the fee established for providing such information.

Airgas
an Air Liquide company

Airgas Specialty Gases
Airgas USA LLC
11711 S. Alameda Street
Los Angeles, CA 90059
Airgas.com

CERTIFICATE OF ANALYSIS

Grade of Product: EPA PROTOCOL STANDARD

Part Number:	E04NI61E15A0574	Reference Number:	48-402546580-1
Cylinder Number:	CC121798	Cylinder Volume:	143.7 CF
Laboratory:	124 - Los Angeles (SAP) - CA	Cylinder Pressure:	2016 PSIG
PGVP Number:	B32022	Valve Outlet:	590
Gas Code:	CO,CO2,O2,BALN	Certification Date:	Sep 23, 2022

Expiration Date: Sep 23, 2030

Certification performed in accordance with "EPA Traceability Protocol for Assay and Certification of Gaseous Calibration Standards (May 2012)" document EPA 600/R-12/531, using the assay procedures listed. Analytical Methodology does not require correction for analytical interference. This cylinder has a total analytical uncertainty as stated below with a confidence level of 95%. There are no significant impurities which affect the use of this calibration mixture. All concentrations are on a mole/mole basis unless otherwise noted.

Do Not Use This Cylinder below 100 psig, i.e. 0.7 megapascals.

ANALYTICAL RESULTS

Component	Requested Concentration	Actual Concentration	Protocol Method	Total Relative Uncertainty	Assay Dates
CARBON MONOXIDE	4.250 %	4.306 %	G1	+/- 0.6% NIST Traceable	09/23/2022
CARBON DIOXIDE	17.00 %	17.01 %	G1	+/- 0.6% NIST Traceable	09/23/2022
OXYGEN	17.00 %	17.11 %	G1	+/- 0.7% NIST Traceable	09/23/2022
NITROGEN	Balance				

CALIBRATION STANDARDS

Type	Lot ID	Cylinder No	Concentration	Uncertainty	Expiration Date
NTRM	12061520	CC354777	19.87 % CARBON DIOXIDE/NITROGEN	+/- 0.6%	Jan 11, 2024
NTRM	98051002	SG9150866BAL	12.05 % OXYGEN/NITROGEN	+/- 0.7%	Dec 14, 2023
NTRM	08061402	CC267714	1.959 %W CARBON MONOXIDE/NITROGEN	+/- 0.6%	Jul 02, 2024

ANALYTICAL EQUIPMENT

Instrument/Make/Model	Analytical Principle	Last Multipoint Calibration
SIEMENS 6E CO2	NDIR	Sep 16, 2022
SIEMENS 6E CO HIGH	NDIR	Sep 06, 2022
SIEMENS OXYMAT 6	PARAMAGNETIC	Sep 12, 2022

Triad Data Available Upon Request

Approved for Release

Making our world more productive

DocNumber: 539508

Linde Gas & Equipment Inc.
5700 S. Alameda Street
Los Angeles CA 90058
Tel: 323-585-2154
Fax: 714-542-6689
PGVP ID: F22023

CERTIFICATE OF ANALYSIS / EPA PROTOCOL GAS

Customer & Order Information

LGEPKG TUALATIN OR H
10450 SW TUALATIN SHERWOOD ROAD
TUALATIN OR 97062-9547

Certificate Issuance Date: 05/08/2023
Linde Order Number: 72422600
Part Number: NI CD17CO8E-AS
Customer PO Number: 80430965

Fill Date: 05/02/2023
Lot Number: 70086312207
Cylinder Style & Outlet: AS CGA 590
Cylinder Pressure and Volume: 1290 psig 99 ft3

Certified Concentration

ProSpec EZ Cert

Expiration Date:	05/08/2031	NIST Traceable
Cylinder Number:	CC505834	Expanded Uncertainty
16.98 %	Carbon dioxide	± 0.13 %
4.30 %	Carbon monoxide	± 0.03 %
17.16 %	Oxygen	± 0.05 %
Balance	Nitrogen	

Certification Information:

Certification Date: 05/08/2023 *Term:* 96 Months *Expiration Date:* 05/08/2031

This cylinder was certified according to the 2012 EPA Traceability Protocol, Document #EPA-600/R-12/531, using Procedure G1. Uncertainty above is expressed as absolute expanded uncertainty at a level of confidence of approximately 95% with a coverage factor k = 2. Do Not Use this Standard if Pressure is less than 100 PSIG.

CO2 responses have been corrected for Oxygen IR Broadening effect. O2 responses have been corrected for CO2 interference.

Analytical Data:

(R=Reference Standard, Z=Zero Gas, C=Gas Candidate)

1. *Component:* **Carbon dioxide**

Requested Concentration: 17 %
Certified Concentration: 16.98 %
Instrument Used: Horiba VIA-510 S/N 20C194WK
Analytical Method: NDIR
Last Multipoint Calibration: 04/25/2023

Reference Standard: Type / Cylinder #: NTRM / CC725981
Concentration / Uncertainty: 19.34 % ±0.03 %
Expiration Date: 01/12/2027
Traceable to: SRM # / Sample # / Cylinder #: NTRM / 190701 / CC725973
SRM Concentration / Uncertainty: 19.34% / ±0.031%
SRM Expiration Date: 01/12/2027

First Analysis Data:								Date	05/08/2023
Z:	0	R:	19.34	C:	16.98	Conc:	16.97		
R:	19.36	Z:	0	C:	16.99	Conc:	16.98		
Z:	0	C:	17	R:	19.35	Conc:	16.99		
UOM:	%					Mean Test Assay:	16.98 %		

Second Analysis Data:								Date	
Z:	0	R:	0	C:	0	Conc:	0		
R:	0	Z:	0	C:	0	Conc:	0		
Z:	0	C:	0	R:	0	Conc:	0		
UOM:	%					Mean Test Assay:			

2. *Component:* [illegible]

Appendix F: Communication (CBI)

United States Environmental Protection Agency

OMB Control No. 2060-0161
Approval expires 03/31/2019

OMB Control No. 2060-0693
Approval expires 03/31/2019

30-DAY NOTIFICATION

2015 CLEAN AIR ACT (CAA) STANDARDS OF PERFORMANCE FOR NEW RESIDENTIAL WOOD HEATERS, NEW RESIDENTIAL HYDRONIC HEATERS AND FORCED-AIR FURNACES 40 CFR PART 60 SUBPARTS AAA AND QQQQ

The public reporting and recordkeeping burden for this collection of information is estimated to average 2 hours per response. Send comments on the Agency's need for this information, the accuracy of the provided burden estimates, and any suggested methods for minimizing respondent burden, including through the use of automated collection techniques to the Director, Regulatory Support Division, U.S. Environmental Protection Agency (2822T), 1200 Pennsylvania Ave., NW, Washington, D.C. 20460. Include the OMB control number in any correspondence. Do not send the completed form to this address.

Disclaimer: The statutory provisions and the EPA regulations described in this document contain legally binding requirements. This document is not a substitute for those provisions or regulations, nor is it a regulation itself. In the event of a discrepancy, please refer to 40 CFR PART 60 Subparts AAA AND QQQQ, sections 60.537 and 60.5479. If you have additional questions, please contact Rafael Sanchez at 202-564-7028 or via email at sanchez.rafael@epa.gov.

Instructions: The manufacturer of an affected wood/pellet heater/central heater model line must notify the Administrator of the date that certification testing is scheduled to begin by email to WoodHeaterReports@epa.gov. This notice must be received by the EPA at least 30 days before the start of testing.

GENERAL INFORMATION						
Manufacturer's Name: Fireplace Products International, Ltd - Regency Fireplace						
Heater Type (Circle One):	☒Adjustable Burn Rate Wood Heater	☐Pellet Stove	☐Single Burn Rate Heater	☐Hydronic Heater	☐Forced Air Furnace	☐Other:
Hydronic Heater Type (Check one):	☐Full Storage	☐Partial Storage	☐Indoor	☐Outdoor	☐Other:	
Forced-Air Furnace Type (Check one):	☐Small (less than 65,000 BTU/hr heat output)		☐Large (greater than 65,000 BTU/hr heat output)			
Fuel Tested (Check one):	☒Crib	☐Pellet	☐Cordwood	☐Wood Chips	☐Other:	
Model Name(s) (as will appear on test report): i3000R, i3000A, Hi3000, FP3000R, FP3000A, S3000R, S3000A						
Model Number(s) (as will appear on test report): Same						
Equipped with a catalytic combustor? ☒**Yes** ☐**No**						
Mailing Address: 6988 Venture St.						
Street Address: Same						

United States Environmental Protection Agency

OMB Control No. 2060-0161
Approval expires 03/31/2019

OMB Control No. 2060-0693
Approval expires 03/31/2019

30-DAY NOTIFICATION

2015 CLEAN AIR ACT (CAA) STANDARDS OF PERFORMANCE FOR NEW RESIDENTIAL WOOD HEATERS, NEW RESIDENTIAL HYDRONIC HEATERS AND FORCED-AIR FURNACES 40 CFR PART 60 SUBPARTS AAA AND QQQQ

The public reporting and recordkeeping burden for this collection of information is estimated to average 2 hours per response. Send comments on the Agency's need for this information, the accuracy of the provided burden estimates, and any suggested methods for minimizing respondent burden, including through the use of automated collection techniques to the Director, Regulatory Support Division, U.S. Environmental Protection Agency (2822T), 1200 Pennsylvania Ave., NW, Washington, D.C. 20460. Include the OMB control number in any correspondence. Do not send the completed form to this address.

Disclaimer: The statutory provisions and the EPA regulations described in this document contain legally binding requirements. This document is not a substitute for those provisions or regulations, nor is it a regulation itself. In the event of a discrepancy, please refer to 40 CFR PART 60 Subparts AAA AND QQQQ, sections 60.537 and 60.5479. If you have additional questions, please contact Rafael Sanchez at 202-564-7028 or via email at sanchez.rafael@epa.gov.

Instructions: The manufacturer of an affected wood/pellet heater/central heater model line must notify the Administrator of the date that certification testing is scheduled to begin by email to WoodHeaterReports@epa.gov. This notice must be received by the EPA at least 30 days before the start of testing.

City: Delta	**State:** BC	**ZIP Code:** V4G 1H4
Phone: 604 946-5155	**Fax: NA**	**Web Site:** www.regency-fire.com
Address of Manufacturer: 6988 Venture Street		
City: Delta	**State** BC	**ZIP Code** V4G 1H4
EPA APPROVED TEST LABORATORY		
Name and Title of Authorized Representative: Sebastian Button- Laboratory Manager		
Company: PFS TECO		
Phone: 503-650-0088	**E-mail:** Sebastian.Button@pfsteco.com	**Fax:**
City: Clackamas	**State:** OR	**ZIP Code:** 97015
EPA APPROVED THIRD-PARTY CERTIFIER		
Name and Title of Authorized Representative: John Steinert : Vice-President Hearth Products Division		
Company: PFS TECO		
Phone: 503 650-0088	**E-mail:** john.steinert@pfsteco.com	**Fax:**

United States Environmental Protection Agency

OMB Control No. 2060-0161
Approval expires 03/31/2019

OMB Control No. 2060-0693
Approval expires 03/31/2019

30-DAY NOTIFICATION

2015 CLEAN AIR ACT (CAA) STANDARDS OF PERFORMANCE FOR NEW RESIDENTIAL WOOD HEATERS, NEW RESIDENTIAL HYDRONIC HEATERS AND FORCED-AIR FURNACES 40 CFR PART 60 SUBPARTS AAA AND QQQQ

The public reporting and recordkeeping burden for this collection of information is estimated to average 2 hours per response. Send comments on the Agency's need for this information, the accuracy of the provided burden estimates, and any suggested methods for minimizing respondent burden, including through the use of automated collection techniques to the Director, Regulatory Support Division, U.S. Environmental Protection Agency (2822T), 1200 Pennsylvania Ave., NW, Washington, D.C. 20460. Include the OMB control number in any correspondence. Do not send the completed form to this address.

Disclaimer: The statutory provisions and the EPA regulations described in this document contain legally binding requirements. This document is not a substitute for those provisions or regulations, nor is it a regulation itself. In the event of a discrepancy, please refer to 40 CFR PART 60 Subparts AAA AND QQQQ, sections 60.537 and 60.5479. If you have additional questions, please contact Rafael Sanchez at 202-564-7028 or via email at sanchez.rafael@epa.gov.

Instructions: The manufacturer of an affected wood/pellet heater/central heater model line must notify the Administrator of the date that certification testing is scheduled to begin by email to WoodHeaterReports@epa.gov. This notice must be received by the EPA at least 30 days before the start of testing.

City:	**State:**	**ZIP Code:**
Clackamas	OR	97015
COMPLIANCE TEST INFORMATION		
Test Method(s): EPA M28R, ASTM 2515-11, ASTM E2780-10, CSA B415.1-22,		
Date(s) of Proposed Test: Week of November 27, 2023		
Testing Location: PFS TECO - 11785 SE HWY 212 - Suite 305 Clackamas, OR 97015		

United States Environmental Protection Agency

OMB Control No. 2060-0161
Approval expires 03/31/2019

OMB Control No. 2060-0693
Approval expires 03/31/2019

30-DAY NOTIFICATION

2015 CLEAN AIR ACT (CAA) STANDARDS OF PERFORMANCE FOR NEW RESIDENTIAL WOOD HEATERS, NEW RESIDENTIAL HYDRONIC HEATERS AND FORCED-AIR FURNACES 40 CFR PART 60 SUBPARTS AAA AND QQQQ

The public reporting and recordkeeping burden for this collection of information is estimated to average 2 hours per response. Send comments on the Agency's need for this information, the accuracy of the provided burden estimates, and any suggested methods for minimizing respondent burden, including through the use of automated collection techniques to the Director, Regulatory Support Division, U.S. Environmental Protection Agency (2822T), 1200 Pennsylvania Ave., NW, Washington, D.C. 20460. Include the OMB control number in any correspondence. Do not send the completed form to this address.

Disclaimer: The statutory provisions and the EPA regulations described in this document contain legally binding requirements. This document is not a substitute for those provisions or regulations, nor is it a regulation itself. In the event of a discrepancy, please refer to 40 CFR PART 60 Subparts AAA AND QQQQ, sections 60.537 and 60.5479. If you have additional questions, please contact Rafael Sanchez at 202-564-7028 or via email at sanchez.rafael@epa.gov.

Instructions: The manufacturer of an affected wood/pellet heater/central heater model line must notify the Administrator of the date that certification testing is scheduled to begin by email to WoodHeaterReports@epa.gov. This notice must be received by the EPA at least 30 days before the start of testing.

Julian Mills, Director Product Design
Print Name and Title of Authorized Official

Signature

10/26/2023
Date

Telephone Number: 604 946 5155

Email Address: jmills@regency-fire.com

Remarks:

v1