Fireplace Products International, Ltd.

Project # 19-464
Model: F5200
Type: Wood-Fired Room Heater
May 2, 2019

ASTM E3053 Standard Test Method for Determining Particulate Matter Emissions from Wood Heaters Using Cordwood Test Fuel (EPA ALT-125)

Contact: Mr. Dave Lal
6988 Venture Street
Delta, BC VG4 1H4
Canada
dlal@regency-fire.com
(604)-946-5155

Prepared by: Sebastian Button,
Laboratory Supervisor

11785 SE Highway 212 – Suite 305
Clackamas, OR 97015-9050
(503) 650-0088
WWW.PFSTECO.COM

This page intentionally left blank.

Contents

Affidavit 3
Introduction 4
Notes 4
Wood Heater Identification and Testing 5
Test Procedures and Equipment 6
Results 7
Summary Table 7
Test Run Narrative 8
Run 1 8
Run 2 8
Run 3 8
Test Conditions Summary 9
Appliance Operation and Test Settings 9
Settings & Run Notes 9
Appliance Description 10
Appliance Dimensions 10
Test Fuel Properties 13
Sampling Locations and Descriptions 14
Sample Points 14
Sampling Methods 15
Analytical Methods Description 15
Calibration, Quality Control and Assurances 15
Appliance Sealing and Storage 15
Sealing Label 15
Sealed Unit 16
List of Appendices 17

Affidavit

PFS-TECO was contracted by Fireplace Products International Ltd. (FPI) to provide testing services for the F5200 Wood-Fired Room Heater per ASTM E3053, *Standard Test Method for Determining Particulate Matter Emissions from Wood Heaters Using Cordwood Test Fuel*, which was approved for use under EPA ALT-125. All testing and associated procedures were conducted at PFS-TECO's Portland Laboratory beginning on 4/23/2019 and ending on 4/26/2019. PFS-TECO's Portland Laboratory is located at 11785 SE Highway 212 – Suite 305, Clackamas, Oregon 97015. Testing procedures followed ASTM E3053 with the exception of caveats described in EPA ALT-125. Particulate sampling was performed per ASTM E2515, *Standard Test Method for Determination of Particulate Matter Emissions Collected by a Dilution Tunnel,* with the exception of caveats described in EPA ALT-125. A copy of EPA ALT-125 is included in Appendix A for reference, as required by the approval letter.

PFS-TECO is accredited by the U.S. Environmental Protection Agency for the certification and auditing of wood heaters pursuant to subpart AAA of 40 CFR Part 60, New Source Performance Standards for Residential Wood Heaters and subpart QQQQ of 40 CFR Part 60, Standards of Performance for New Hydronic Heaters and Forced Air Furnaces, Methods 28R, 28WHH, 28 WHH-PTS, and all methods listed in Sections 60.534 and 60.5476. PFS-TECO holds EPA Accreditation Certificate Numbers 4 and 4M (mobile). PFS-TECO is accredited by IAS to ISO 17020:2012 "Criteria for Bodies Performing Inspections", and ISO 17025:2005 "Requirements for Testing Laboratories." PFS-TECO is also accredited by Standards Council of Canada to ISO 17065:2012 "Requirements for Bodies Operating Product Certification Systems."

The following people were associated with the testing, analysis and report writing associated with this project.

Sebastian Button, Laboratory Supervisor

Introduction

FPI-Regency Fireplaces Products of Delta, BC, contracted with PFS-TECO to perform EPA certification testing on F5200 Wood-Fired Room Heater. All testing was performed at PFS-TECO's Portland Laboratory. Testing was performed by Mr. Sebastian Button.

Notes

- Prior to start of testing, 50 hours of conditioning was performed per ASTM E3053.
- Prior to start of testing, the dilution tunnel was cleaned with a steel brush.
- Front filters were changed on sample train A at one hour for all 3 test runs.
- A total of 3 test runs were performed in accordance with ASTM E3053, no anomalies occurred, no additional tests performed, see Run Narrative section for further detail on each run.

Wood Heater Identification and Testing

- Appliance Tested: ***F5200***
- Serial Number: ***413 001059 – PFS Tracking Number 0024***
- Manufacturer*:* ***FPI-Regency Fireplace Products***
- Catalyst: ***Yes***
- Heat exchange blower: ***Optional***
- Type: ***Wood Stove***
- Style: ***Pedestal***
- Date Received: ***Thursday, February 21, 2019***
- Testing Period – Start: ***Tuesday, April 23, 2019*** Finish: ***Friday, April 26, 2019***
- Test Location: ***PFS-TECO Portland Laboratory, 11785 SE HWY 212 - Suite 305, Clackamas, OR 97015***
- Elevation: ***≈131 Feet above sea level***
- Test Technician(s): ***Sebastian Button***

Test Procedures and Equipment

All Sampling and analytical procedures were performed by Sebastian Button. All procedures used are directly from ASTM E3053 and ASTM E2515. See the list below for equipment used. See Appendix C submitted with this report for calibration data.

Equipment List:

Equipment ID#	Equipment Description
041	Rice Lake 3'x3' floor scale w/digital weight indicator
050	Digiweigh DWP12i Platform Scale
053	APEX XC-60 Digital Emissions Sampling Box A
054	APEX XC-60 Digital Emissions Sampling Box B
055	APEX Ambient sampling box
057	California Analytical ZRE CO2/CO/O2 IR ANALYZER
064	Digital Barometer
109A/B	Troemner 100mg/200mg Audit Weights
107	Sartorius Analytical Balance
051	10 lb audit weight
090	Dewalt Tape Measure
092	Digital Calipers
095	Anemometer
111	Microtector
115	Delmhorst Wood Moisture Meter
CC700832	Gas Analyzer Calibration Span Gas
CC170624	Gas Analyzer Calibration Mid Gas

Results

The weighted average emissions rate for the 3 run test series was measured to be **0.90 g/hr** with a Higher Heating Value efficiency of **80.0%.** The average CO emission rate for the 3 tests was **0.53 g/min.** The FPI F5200 Wood-Fired Room Heater meets the 2020 cordwood PM emission standard of ≤ 2.5 g/hr per CFR 40 part 60, §60.532 (c).

Detailed individual run data can be found in Appendix A submitted with this report.

Summary Table

	High Fire Test	Low Fire Test	Medium Fire Test
Date	4/23/2019	4/23/2019	4/25/2019
Run Number	1	2	3
PM Emission Rate (g/hr)	2.58	0.40	0.56
Burn Rate (kg/hr)	3.21	1.07	1.35
Heat Output (BTU/hr)	47,081	16,648	20,501
HHV Efficiency (%)	75.3%	82.4%	79.9%
LHV Efficiency (%)	80.6%	88.1%	85.5%
CO Emissions (g/MJ output)	1.37	0.33	0.99
CO Emissions (g/kg dry fuel)	20.53	5.48	15.73
CO Emissions (g/min)	1.13	0.10	0.36
First Hour Emission Rate (g/hr)	6.55	2.00	2.24
Weighting Factor (%)	20%	40%	40%
Weighted particulate emission average of 3 test runs: 0.90 grams per hour.			
Weighted average HHV efficiency of 3 test runs: 80.0%.			
Average CO emission rate for 3 test runs: 0.53 grams per minute			

Test Run Narrative

Run 1

Run 1 was performed on 4/23/2019 as a high fire test run per ASTM E3053. Emissions sampling began from a cold start ignition of kindling and start-up fuel. The test fuel load was loaded 56 minutes into the test. Testing was completed when 90% of the test fuel load was consumed. Total test time was 330 minutes, main test fuel load burn time was 274 min. The particulate emissions rate from kindling ignition to test completion was 2.58 g/hr. The burn rate of the test fuel load was 3.21 kg/hr. The main test load portion of the run had an overall HHV efficiency of 75.3%. The train A front filter was changed at 1 hr. All test results were appropriate and valid. There were no anomalies and all test criteria were met.

Run 2

Run 2 was performed on 4/23/2019 as a low fire test run per ASTM E3053. The overall test duration was 1110 minutes. The burn rate for the test run was 1.07 kg/hr. The particulate emissions rate for the test run was 0.40 g/hr. The run had an overall HHV efficiency of 82.4%. The train A front filter was changed at 1 hr. All test results were appropriate and valid. There were no anomalies and all test criteria were met.

Run 3

Run 3 was performed on 4/25/2019 as a medium fire test run per ASTM E3053. The overall test duration was 850 minutes. The burn rate for the test run was 1.35 kg/hr, therefore the medium fire category requirements were met, less than the mid-point of the high and low burn rates (2.14 kg/hr). The particulate emissions rate for the test run was 0.56 g/hr. The run had an overall HHV efficiency of 79.9%. The train A front filter was changed at 1 hr. There were no anomalies and all criteria were met.

Test Conditions Summary

Testing conditions for all runs fell within allowable specifications of ASTM E3053 and ASTM E2515. A summary of facility conditions, fuel burned, and run times is listed below.

Runs	Ambient (°F)		Relative Humidity (%)		Average Barometric Pressure (In. Hg.)	Preburn Fuel Weight (lbs)	Test Fuel Weight (lbs)	Test Fuel Moisture (%DB)	Test Run Time (Min)
	Pre	Post	Pre	Post					
1	64	73	51.4	39.7	30.06	15.12[1]	45.97	23.1%	330[1]
2	73	71	38.4	22	30.13	45.97	52.94	21.8%	1110
3	66	75	32.6	26.7	29.94	43.06	51.92	22.7%	850

[1]This is the weight of the kindling and startup fuel

[2]Total test time was 330 min, high fire test load burn duration was 274 min.

Appliance Operation and Test Settings

The appliance was operated according to procedures as described in the Operations Manual, found in Appendix B submitted with this report. Detailed run information can be found in Appendix A submitted with this report.

Settings & Run Notes

	Pre-Burn Air Setting	Test Run Air and Fan Settings
Run 1	N/A – Cold Start Ignition	Air control set to high fire test setting, blower off for first 20 min, then set to high.
Run 2	Air control set to High Fire Setting in accordance with ASTM E3053	Air control set to low fire test setting, blower off for first 20 min, then set to low.
Run 3	Air control set to High Fire Setting in accordance with ASTM E3053	Air control set to medium fire test setting, blower off for first 20 min, then set to low.

Appliance Description

Model(s): F5200

Appliance Type: Wood-Fired Room Heater

Firebox Volume: 4.42 ft^3

Air Introduction System: Primary Air enters the firebox from the front bottom of the appliance and is channeled up the sides on the appliance and down through the air wash, as well as through a pilot air opening in the front of the firebox. Primary air is controlled via a damper arm located below the ashlip which moves left (open) to right (closed). Secondary air is pulled through a fixed opening in to rear bottom of the appliance and channeled up through a single secondary air tube. Dimensions on all these features can be found in Appendix D.

Bypass: The combustor bypass plate is located at the top/rear of the firebox and is operated via a control arm on the left side of the stove. When engaged, flue gases are forced to the front of the firebox and up through the combustor. When open, the flue gases exhaust straight up the flue through a 10.25” x 4.25” opening.

Refractory Insulation: The firebox is lined with 1” thick firebrick.

Flue Outlet: 8-inch exhaust outlet located on the top of the appliance.

Catalytic Combustor: 2, 3.5” x 7” x 3” 16 cell ceramic substrate Applied Ceramics combustors are located at the top of the firebox, above the secondary tubes. A catalyst temperature probe is provided with the appliance to monitor exit temperatures within 1” of the combustor.

Fan: The F5200 is optionally offered with a convection fan that attached to the bottom rear of the appliance.

Appliance Dimensions

F5200 Unit Dimensions

Height	Width	Depth	Firebox Volume
39.75”	29”	29”	4.42 ft^3

Appliance design drawings can be found in Appendix D submitted with the CBI copy of this report.

Appliance Front

Appliance Left

Appliance Right

Appliance Rear

Test Fuel Properties

Test fuel used was Maple cordwood, split and air-dried to the specified moisture content range. Typical fuel loads are pictured below:

Typical Kindling Load

Typical Startup Load

Typical High Fire Load

Typical Low Fire Load

Sampling Locations and Descriptions

Sample ports are located 16.5 feet downstream from any disturbances and 1 foot upstream from any disturbances. Flow rate traverse data was collected 12 feet downstream from any disturbances and 5.5 feet upstream from any disturbances. (See below).

Sample Points

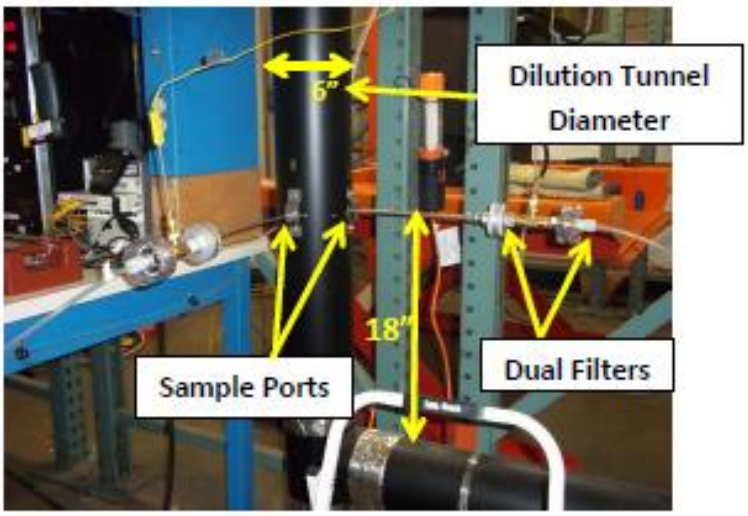

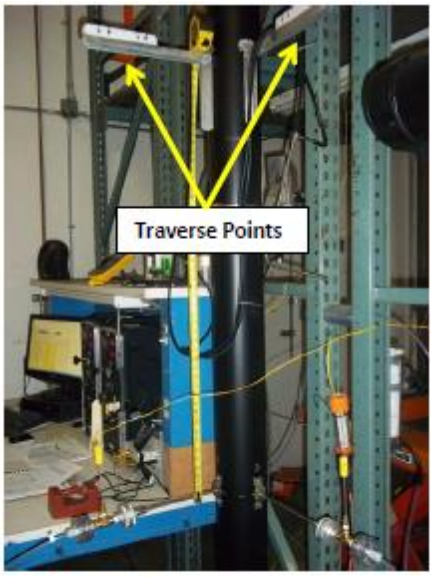

Sampling Methods

ASTM E2515 was used in collecting particulate samples. The dilution tunnel is 6 inches in diameter. All sampling conditions per ASTM E2515 were followed. No alternate procedures were used with the exception of caveats described in ALT-125: Pall TX40 Emfab filters were used, filter temperatures were maintained between 80 and 90°F for all tests, filters were weighed in pairs where applicable, and no sampling intervals fell outside of proportional rates of +/- 10%.

Analytical Methods Description

All sample recovery and analysis procedures followed ASTM E2515 procedures. At the end of each test run, filters, O-Rings and probes were removed from their housings, dessicated for a minimum of 24 hours, and then weighed at 6 hour intervals to a constant weight per ASTM E2515-11 Section 10.

Calibration, Quality Control and Assurances

Calibration procedures and results were conducted per EPA Method 28R, ASTM E2515-11 and ASTM E3053. Test method quality control procedures (leak checks, volume meter checks, stratification checks, proportionality results) followed the procedures outlined.

Appliance Sealing and Storage

Upon completion of testing, the appliance was secured with metal strapping and the seal below was applied, the appliance was then returned to the manufacturer's location at: 6988 Venture St, Delta, BC V4G 1H4, Canada, for archival.

Sealing Label

ATTENTION:

THIS SEAL IS NOT TO BE BROKEN WITHOUT PRIOR AUTHORIZATION FROM THE UNITED STATES ENVIRONMENTAL PROTECTION AGENCY.

THIS APPLIANCE HAS BEEN SEALED INACCORDANCE WITH REQUIREMNTS OF 40CFR PART 60 SUBPART AAA §60.535 (a)(2)(vii)

REPORT #_____ DATE SEALED_____

MANUFACTURER_____ MODEL #_____

Sealed Unit

List of Appendices

The following appendices have been submitted electronically in conjunction with this report:

Appendix A – Test Run Data, Technician Notes, Sample Analysis, and Alternate Test Method Approval

Appendix B – Labels and Manuals

Appendix C –Equipment Calibration Records

Appendix D – Design Drawings (CBI Report Only)

Appendix E – Manufacturer QAP (CBI Report Only)

WOOD HEATER TESTING SUMMARY

SECTION 1 – Model Identification	
Model Name(s)/Number(s)	F5200
Manufacturer	FPI - Regency Fireplaces Products
Address 1	6988 Venture St.
Address 2	Delta, BC V4G 1H4
Appliance Category(s) (Free-standing, Insert, etc.)	Free-standing
Usable Firebox Volume - ft^3	4.42
Catalytic/Non-Cat	Catalytic
Convection Air Fan (No, Standard, Optional)	Optional

SECTION 1B – Laboratory Information	
Testing Laboratory	PFS-TECO
Address 1	11785 SE Hwy 212 Ste 305
Address 2	Clackamas, OR 97015
ISO/Accreditation Info	ISO 17025
Dates Tested	4/23/2019 - 4/26/2019
Test Methods/Standards	ASTM E3053 (ALT-125), ASTM E2515
Dilution Tunnel Inside Diameter - in.	6.00
Filter Diameter - mm	47
Filter Material	Pall Type TX40

SECTION 2 – Test Conditions Summary

Test Run #	1	2	3	
Date Tested	4/23/2019	4/23/2019	4/25/2019	
Test Run Category (L, M, H)	High Fire	Low Fire	Medium Fire	
Average Barometric Pressure - in Hg	30.06	30.13	29.94	
Max. Observed Ambient Temp - °F	73	77	76	
Min. Observed Ambient Temp - °F	64	71	66	
Max. Observed Filter Temp - °F	88	86	87	
Test Fuel Load				
Cordwood Fuel Species	Maple, Hard	Maple, Hard	Maple, Hard	
Specific Gravity (from Table 1)	0.6	0.6	0.6	
Higher Heating Value - Btu/lb (from Annex A1)	8587	8587	8587	
Nom. Test Fuel Load Piece Length - in.	20	20	20	
Number of Test Fuel Pieces	6	6	6	
Test Fuel Weight				
Kindling - As Fired lb	5.95	N/A	N/A	
Kindling Wt. - As % of Test Fuel Load	13%	N/A	N/A	
Kindling Moisture - % DB	10%	N/A	N/A	
Kindling - kg DB	2.45	N/A	N/A	
SU Fuel - As Fired lb	9.17	N/A	N/A	
SU Fuel Wt. - As % of Test Fuel Load	20%	N/A	N/A	
SU Fuel Moisture - % DB	20%	N/A	N/A	
SU Fuel - kg DB	3.46	N/A	N/A	
Test Fuel Load - As Fired lb	45.97	52.94	51.92	
Ave. Test Fuel Load MC % DB	23.1%	21.8%	22.7%	
Test Fuel Load - kg DB	16.94	19.72	19.19	
Test Fuel Loading Density - lb/ft3	10.40	11.98	11.75	
Residual SU Fuel Wt. - As Fired lb	4.60	N/A	N/A	
Residual SU Fuel Wt. - As % of Test Fuel Load	10%	N/A	N/A	
Test Run Duration - minutes	330	1110	850	
Test Run Duration - h	5.50	18.50	14.17	
Run Duration of High Fire Load Only - minutes	274	N/A	N/A	
Run Duration of High Fire Load Only - h	4.57	N/A	N/A	
Test Fuel Load Wt. at End of Test - As Fired lb	5.1	0	0	
Total Fuel Burned - kg DB	18.47	19.72	19.19	
% Test Fuel Load Wt. at End of Test	11.0%	0.0%	0.0%	

SECTION 3 – Test Run Results Summary

Test Run #	1	2	3	
Date Tested	4/23/19	4/23/19	4/25/19	
Test Run Category	High Fire	Low Fire	Medium Fire	
Burn Rate - kg/h DB	3.21	1.07	1.35	
Heat Output - Btu/h	47,081	16,648	20,501	
Average Dilution Tunnel Flow Rate - dscfm	203.01	207.50	191.97	
Average Sample Flow Rates - dscfm	0	0	0	
Train 1	0.148	0.151	0.150	
Train 2	0.146	0.150	0.148	
Total PM Emissions - g	0	0	0	
Train 1	14.52	7.44	8.29	
Train 2	13.84	7.20	7.71	
Average	14.179	7.320	8.001	
PM Emission Train Precision - %	2.4%	1.6%	3.6%	
PM Emission Train Precision - g/kg	0.02	0.01	0.02	
PM Emission Rate - g/h	2.58	0.40	0.56	
Total CO Emissions - g	309	108	302	
CO Emissions Rate - g/h	68	6	21	
Overall Efficiency - CSA B415.1-10	0	0	0	
% HHV Basis	75%	82%	80%	
% LHV Basis	81%	88%	85%	

SECTION 4 - Weighted Average Summary

Test Run Category	High Fire	Low Fire	Medium Fire
Burn Rate - kg/h DB	3.21	1.07	1.35
PM Emission Rate - g/h	2.58	0.40	0.56
CO Emissions Rate - g/h	67.8	5.8	21.3
Overall Efficiency - CSA B415.1-10	0	0	0
% HHV Basis	75%	82%	80%
% LHV Basis	81%	88%	85%
Heat Output - Btu/h	47100	16600	20500
Category Weighting	20%	40%	40%

ASTM E 3053 Weighted Averages			
PM Emission Rate - g/h	0.9		
CO Emissions Rate - g/h (Arithmetic Average)	31.6		
CO Emissions Rate - g/min (Arithmetic Average)	0.5		
Overall Efficiency - CSA B415.1-10			
% HHV Basis	80%		
% LHV Basis	86%		
Heat Output Range - Btu/h	16600	to	47100

Conditioning Data

Client:	FPI	Job #:	19-464
Model:	F5200	Tracking #:	0024
Date(s):	4/2/19 - 4/5/19, 4/22/19	Technician:	SJB

		Average:	348.5	76.1	825
Elapsed Time (hrs)	**Scale Reading (lbs)**	**Weight Change (lbs)**	**Flue (°F)**	**Ambient (°F)**	**Catalyst Exit (°F)**
0	1.2	-	368	75	397
1	5.4	4.2	598	76	1212
2	33.6	28.2	563	74	1245
3	22.2	-11.4	499	76	1094
4	16.1	-6.1	437	76	995
5	11.4	-4.7	426	74	980
6	51.8	40.4	438	74	805
7	46.0	-5.8	297	74	885
8	41.2	-4.8	341	75	1037
9	34.5	-6.7	392	75	1194
10	27.5	-7.0	391	76	1153
11	19.6	-7.9	407	74	1144
12	14.7	-4.9	348	76	1050
13	11.3	-3.4	301	76	816
14	10.1	-1.2	238	74	643
15	8.9	-1.2	219	74	592
16	8.0	-0.9	209	76	560
17	6.9	-1.1	211	74	575
18	5.9	-1.0	205	74	555
19	4.9	-1.0	205	74	550
20	4.0	-0.9	205	74	556
21	2.9	-1.1	209	76	566
22	1.8	-1.1	215	74	562
23	0.7	-1.1	209	74	535
24	0.0	-0.7	206	75	524
25	1.5	1.5	598	65	427
26	5.8	4.3	581	69	1190
27	29.2	23.4	607	74	1258
28	17.4	-11.8	511	80	1107
29	11.5	-5.9	478	82	1100
30	50.9	39.4	424	82	721
31	43.2	-7.7	412	81	1198
32	36.2	-7.0	415	80	1199
33	28.3	-7.9	444	80	1274
34	20.1	-8.2	438	81	1213
35	13.1	-7.0	412	80	1215
36	10.6	-2.5	292	80	774
37	9.3	-1.3	248	79	647
38	8.4	-0.9	219	79	554
39	7.6	-0.8	209	79	531
40	6.7	-0.9	213	78	561
41	5.6	-1.1	227	78	577
42	4.4	-1.2	231	78	594
43	3.3	-1.1	226	78	577
44	2.3	-1.0	217	78	552
45	1.5	-0.8	207	79	524
46	0.7	-0.8	198	79	505
47	0.0	-0.7	194	79	488
48	46.9	46.9	628	71	1121
49	32.8	-14.1	523	72	975
50	26.4	-6.4	482	72	954

Signature/Date:

UNITED STATES ENVIRONMENTAL PROTECTION AGENCY
RESEARCH TRIANGLE PARK, NC 27711

FEB 28 2018

OFFICE OF
AIR QUALITY PLANNING
AND STANDARDS

Mr. Justin White
Hearthstone QHPP, Inc.
#17 Stafford Ave.
Morrisville, VT 05661

Dear Mr. White,

I am writing in response to your letter dated January 12, 2018, regarding wood heaters manufactured by Hearthstone QHPP, Inc. (Hearthstone). This response, dated February 28, 2018, supercedes our previous response (dated February 26, 2018) to correct an inaccuracy regarding required changes to ASTM E3053-17.

You are requesting to use an alternative test method, using cord wood, as referenced in section 60.532(c) of 40 CFR part 60, Subpart AAA, Standards of Performance for New Residential Wood Heaters (Subpart AAA) to meet the 2020 cord wood alternative compliance option. The 2020 cord wood alternative compliance option states that each affected wood heater manufactured or sold at retail for use in the United States on or after May 15, 2020, must not discharge into the atmosphere any gases that contain particulate matter in excess of 2.5 g/hr. Compliance must be determined by a cord wood test method approved by the Administrator along with the procedures in 40 CFR 60.534. You have requested approval to use the procedures and specifications found in ASTM Method E3053-17, a cord wood test method titled, "Standard Test Method for Determining Particulate Matter Emissions from Wood Heaters using Cordwood Test Fuel," in conjunction with ASTM E2515-11 and Canadian Standards Administration (CSA) Method CSA-B415.1-10, which are specified in 40 CFR 60.534.

We understand that Hearthstone is also requesting that the alternative method proposed above be approved to apply broadly to all wood heaters manufactured by Hearthstone meeting the requirements of Subpart AAA, from the approval date of this request until such time that Subpart AAA is revised or replaced to require a different cord wood certification method, providing all requirements of section 60.533 of Subpart AAA are met.

With the caveats set forth below, we approve your alternative test method request for certifying wood heaters using ASTM E3053-17 in conjunction with section 60.534 of Subpart AAA to meet the 2020 cord wood compliance option until such time that Subpart AAA is revised or replaced to require a different cord wood certification method. We also approve application of this alternative method to all wood heaters manufactured by Hearthstone meeting the requirements of Subpart AAA.

As required in Subpart AAA, section 60.354(d), you or your approved test laboratory must also measure the first hour of particulate matter emissions for each test run using a separate filter in one of the two parallel sampling trains. These results must be reported separately and also included in the total particulate matter emissions per run. Also, as required by Subpart AAA, section 60.534(e), you must have your approved laboratory measure the efficiency, heat output, and carbon monoxide emissions of the tested wood heater using CSA-B415.1-10. For measurement of particulate matter emission concentrations, ASTM 2515-11 must be used.

The following change to ASTM E3053-17 must be followed:

1. Coal bed conditions prior to loading test fuel. The coal bed shall be a level plane without valleys or ridges for all test runs in the high, low, and medium burn rate categories.

The following changes to ASTM E2515-11 must be followed:

1. The filter temperature must be maintained between 80 and 90 degrees F during testing.

2. Filters must be weighed in pairs to reduce weighing error propagation; see ASTM 2515-11, Section 10.2.1 Analytical Procedure.

3. Sample filters must be Pall TX-40 or equivalent Teflon-coated glass fiber, and of 47 mm, 90 mm, 100 mm, or 110 mm in diameter.

4. Only one point is allowed outside the +/- 10 percent proportionality range per test run.

A copy of this letter must be included in each certification test report where this alternative test method is utilized.

It is reasonable that this alternative test method approval be broadly applicable to all wood heaters subject to the requirements of 40 CFR part 60, Subpart AAA. For this reason, we will post this letter as ALT-125 on our website at *http://www3.epa.gov/ttn/emc/approalt.html* for use by other interested parties. As noted earlier in this letter, this alternative method approval is valid until such time that Subpart AAA is revised or replaced to require a different cord wood certification method, and at such time, this alternative will be reconsidered and possibly withdrawn.

If you have additional questions regarding this approval, please contact Michael Toney of my staff at 919-541-5247 or toney.mike@epa.gov.

Sincerely,

Steffan M. Johnson, Group Leader
Measurement Technology Group

cc: Amanda Aldridge, EPA/OAQPS/OID
Adam Baumgart-Getz, EPA/OAQPS/OID
Rafael Sanchez, EPA/OECA
Michael Toney, EPA/OAQPS/AQAD

Sample Calculations – ASTM E3053 & E2515

Client: FPI
Model: F5200
Run: 1

Equations used to calculate the parameters listed below are described in this appendix. Sample calculations are provided for each equation. The raw data and printout results from a sample run are also provided for comparison to the sample calculations.

M_{Fldb} – Weight of test fuel load, dry basis, lb (kg)

M_{SUdb} – Weight of start-up fuel, dry basis, lb (kg)

M_{Kdb} - Weight of kindling, dry basis, lb (kg)

M_{FREHdb} - Total weight of all remaining fuel at end of high fire test run, lb (kg)

M_{TFBHdb} - Total weight of all fuel burned during high fire test run, lb (kg), dry basis

BR_H – Dry burn rate for high fire test run, from time when test fuel load is added to end of test run, lb/h (kg/h)

M_{TFBdb} - Total weight of fuel burned during low or medium fire test run, lb (kg), dry basis

BR - Dry burn rate for low and medium fire test runs, lb/h (kg/h)

V_s – Average gas velocity in the dilution tunnel, ft/sec

Q_{sd} – Average gas flow rate in dilution tunnel, dscf/hr

$V_{m(std)}$ – Volume of gas sampled, corrected to dry standard conditions, dscf

m_n – Total particulate matter collected, mg

C_s - Concentration of particulate matter in tunnel gas, dry basis, corrected to STP, g/dscf

E_T – Total particulate emissions, g

PR - Proportional rate variation

PM_{RH} - Particulate emission rate for high fire test run, g/hr

PM_{FH} - Particulate emission factor for high fire test run, g/dry kg of fuel burned

PM_R – Particulate emission rate for low or medium fire test run, g/hr

PM_F – Particulate emission factor for low or medium fire test run, g/dry kg of fuel burned

M_{Fldb} – Weight of test fuel load, dry basis, lb (kg)
ASTM E3053 equation (1)

$$M_{Fldb} = \Sigma((M_{FLnwb})(100/(100 + MC_{FLn})))$$

Where,

M_{FLnwb}	=	Weight of each test fuel piece, n, in test fuel load per 8.4.1, wet basis, lb (kg)
MC_{FLn}	=	Average fuel moisture of test fuel piece, n, in test fuel load, % dry basis
n	=	individual test fuel pieces that comprise the test fuel load, as applicable.

Sample Calculation:

n	M_{FLnwb}	MC_{FLn}	$(M_{FLnwb})(100/(100 + MC_{FLn}))$		
1	7.61	26.3	7.61 (100) / (100+ 26.3)) =	6.02	
2	7.96	20.5	7.96 (100) / (100+ 20.5)) =	6.61	
3	10.74	24.8	10.74 (100) / (100+ 24.8)) =	8.61	
4	7.14	24.1	7.14 (100) / (100+ 24.1)) =	5.75	
5	5.93	21.4	5.93 (100) / (100+ 21.4)) =	4.89	
6	6.59	20.7	6.59 (100) / (100+ 20.7)) =	5.46	
7	N/A	N/A	N/A	-	
			SUM	37.34	lbs

M_{Fldb} = **37.34** lbs

M_{Fldb} = **16.94** kg

M_{SUdb} – Weight of start-up fuel, dry basis, lb (kg)
ASTM E3053 equation (2)

$$M_{SUdb} = (M_{SUwb})(100/(100 + MC_{SU}))$$

Where,

M_{SUwb} = Total weight of start-up fuel pieces, wet basis, lb (kg)

MC_{SU} = Average fuel moisture of the piece(s) from which start-up fuel was split, % dry basis

Sample Calculation:

M_{SUwb} = 9.17

MC_{SU} = 20.3

M_{SUdb} = 9.2 (100/(100+ 20.3)

M_{SUdb} = **7.62** lbs

= **3.46** kg

M_{Kdb} - Weight of kindling, dry basis, lb (kg)
ASTM E3053 equation (3)

$$M_{Kdb} = (M_{Kwb})(100/(100 + MC_K))$$

Where,

M_{Kwb} = Weight of kindling per 8.5.6, wet basis, lb (kg);

MC_K = Average moisture of kindling (may be assumed 10%), % dry basis.

Sample calculation:

M_{Kwb} = 5.95

MC_K = 10.0

M_{Kdb} = 5.95 (100/(100+ 10.0)

M_{Kdb} = **5.41** lbs

= **2.45** kgs

M_{FREHdb} - Total weight of all remaining fuel at end of high fire test run, lb (kg)
ASTM E3053 equation (4)

$$M_{FREHdb} = M_{RSUBdb} + M_{FLEHdb}$$

Where,

M_{RSUBdb} = Weight of residual start-up fuel bed when high fire test load added, lb (kg)

M_{FLEHdb} = Weight of unburned portion of test fuel load at the end of the high fire test run, lb (kg)

Sample calculation:

M_{RSUBdb} = 4.6

M_{FLEHdb} = 5.05

M_{FREHdb} = 4.60 + 5.05

M_{FREHdb} = **9.65** lbs

= **4.38** kg

M_{TFBHdb} - Total weight of all fuel burned during high fire test run, lb (kg), dry basis

ASTM E3053 equation (5)

$$M_{TFBHdb} = M_{Kdb} + M_{SUdb} + M_{FLdb} - M_{FREHdb}$$

Sample Calculation:

M_{Kdb} = 5.41

M_{SUdb} = 7.62

M_{FLdb} = 37.34

M_{FREHdb} = 9.65

M_{TFBHdb} = 5.41 + 7.62 + 37.34 - 9.65

= **40.72** lbs

= **18.47** kg

BR_H – Dry burn rate for high fire test run, from time when test fuel load is added to end of test run, lb/h (kg/h)

ASTM E3053 equation (6)

$$BR_H = 60\,(M_{FLdb} - M_{FLEHdb})/\theta_{H1}$$

Where,

θ_{H1} = Total duration of high fire test run, from time when test fuel load is added to end of test run, min.

Sample calculation:

M_{FLdb} = 37.34

M_{FLEHdb} = 5.05

θ_{H1} = 274

$$BR_H = \frac{60\,(\ 37.34\ -\ 5.05\ )}{274}$$

BR_H = **7.07** lb/hr

= **3.21** kg/hr

M_{TFBdb} - Total weight of fuel burned during low or medium fire test run, lb (kg), dry basis
ASTM E3053 equation (7)

$$M_{TFBdb} = M_{FLdb} - M_{FREdb}$$

Where,

M_{FLdb} = Total weight of fuel burned during low or medium fire test run, lb (kg), dry basis

M_{FREdb} = Weight of remaining fuel at end of low or medium fire test run, lb (kg)

Sample Calculation:

M_{FLdb} = N/A - Applicable to Low/Medium Fire Tests Only

M_{FREdb} = N/A - Applicable to Low/Medium Fire Tests Only

M_{TFBdb} = N/A - N/A

= **N/A** lbs

= **N/A** kg

BR - Dry burn rate for low and medium fire test runs, lb/h (kg/h)
ASTM E3053 equation (8)

$$BR = \frac{60\ M_{TFBdb}}{\theta}$$

Where,

θ = Total test run duration for low or medium fire test run, min.

Sample Calculation:

M_{TFBdb} = N/A - Applicable to Low/Medium Fire Tests Only

θ = N/A - Applicable to Low/Medium Fire Tests Only

$$BR = \frac{60 \times \text{N/A}}{\text{N/A}}$$

BR = **N/A** lb/hr

= **N/A** kg/hr

V_s – Average gas velocity in the dilution tunnel, ft/sec
ASTM E2515 equation (9)

$$v_s = F_P \times k_p \times C_p \times (\sqrt{\Delta P})_{avg} \times \sqrt{\frac{T_{s(avg)}}{P_s \times M_s}}$$

Where:

F_p	=	Adjustment factor for pitot tube center point reading = $\frac{V_{strav}}{V_{scent}}$, ASTM E2515 Equation (1)
v_{scent}	=	Dilution tunnel velocity calculated after the multi-point pitot traverse at the center, ft/sec
v_{strav}	=	Dilution tunnel velocity calculated after the multi-point pitot traverse, ft/sec
k_p	=	Pitot tube constant, 85.49
C_p	=	Pitot tube coefficient: 0.99, unitless
ΔP*	=	Velocity pressure in the dilution tunnel, in H_2O
T_s	=	Absolute average gas temperature in the dilution tunnel, °R; (°R = °F + 460)
P_s	=	Absolute average gas static pressure in dilution tunnel, = $P_{bar} + P_g$, in Hg
P_{bar}	=	Barometric pressure at test site, in. Hg
P_g	=	Static pressure of tunnel, in. H_20; (in Hg = in H_20/13.6)
M_s	=	**The dilution tunnel wet molecular weight; M_s = 28.78 assuming a dry weight of 29 lb/lb-mole

Sample calculation:

$$Fp = \frac{18.84}{19.04} = 0.989$$

$$V_s = 0.989 \times 85.49 \times 0.99 \times 0.277 \times \left(\frac{105.2 + 460}{\left(30.06 + \frac{-0.25}{13.6}\right) \times 28.78} \right)^{1/2}$$

V_s = **18.75** ft/s

*The ASTM test standard mistakenly has the square root of the average delta p instead of the average of the square root of delta p. The current EPA Method 2 is also incorrect. This was verified by Mike Toney at EPA.

**The ASTM test standard mistakenly identifies Ms as the dry molecular weight. It should be the wet molecular weight as indicated in EPA Method 2.

Q_{sd} – Average gas flow rate in dilution tunnel, dscf/hr
ASTM E2515 equation (3)

$$Q_{sd} = 3600 \times (1 - B_{ws}) \times v_s \times A \times \frac{T_{std}}{T_{s(avg)}} \times \frac{P_s}{P_{std}}$$

Where:

3600	=	Conversion from seconds to hours (ASTM method uses 60 to convert in minutes)
B_{ws}	=	Water vapor in gas stream, proportion by volume; assume 2%
A	=	Cross sectional area of dilution tunnel, ft^2
T_{std}	=	Standard absolute temperature, 528 °R
P_s	=	Absolute average gas static pressure in dilution tunnel, = P_{bar} + P_g , in Hg
$T_{s(avg)}$	=	Absolute average gas temperature in the dilution tunnel, °R; (°R = °F + 460)
P_{std}	=	Standard absolute pressure, 29.92 in Hg

Sample calculation:

$$Q_{sd} = 3600 \times (1 - 0.02) \times 18.75 \times 0.1963 \times \frac{528}{105.2 + 460} \times \frac{30.06 + \frac{-0.25}{13.6}}{29.92}$$

Q_{sd} = **12180.4** dscf/hr

$V_{m(std)}$ – Volume of Gas Sampled Corrected to Dry Standard Conditions, dscf
ASTM E2515 equation (6)

$$V_{m(std)} = K_1 V_m Y \frac{P_{bar} + \frac{\Delta H}{13.6}}{T_m}$$

Where:

K_1	=	17.64 °R/in. Hg
V_m	=	Volume of gas sample measured at the dry gas meter, dcf
Y	=	Dry gas meter calibration factor, dimensionless
P_{bar}	=	Barometric pressure at the testing site, in. Hg
ΔH	=	Average pressure differential across the orifice meter, in. H_2O
T_m	=	Absolute average dry gas meter temperature, °R

Sample Calculation:

Using equation for Train 1:

$$V_{m(std)} = 17.64 \times 48.779 \times 1.004 \times \frac{\left(30.06 + \frac{2.25}{13.6}\right)}{(90.6 + 460)}$$

$V_{m(std)}$ = **47.425** dscf

Using equation for Train 2:

$$V_{m(std)} = 17.64 \times 48.249 \times 1 \times \frac{\left(30.06 + \frac{2.21}{13.6}\right)}{(89.0 + 460)}$$

$V_{m(std)}$ = **46.854** dscf

Using equation for ambient train:

$$V_{m(std)} = 17.64 \times 38.91 \times 0.999 \times \frac{\left(\underline{30.06} + \frac{0.00}{13.6}\right)}{(70.8 + 460)}$$

$V_{m(std)}$ = **38.827** dscf

m_n – Total Particulate Matter Collected, mg
ASTM E2515 Equation (12)

$$m_n = m_p + m_f + m_g$$

Where:

m_p = mass of particulate matter from probe, mg

m_f = mass of particulate matter from filters, mg

m_g = mass of particulate matter from filter seals, mg

Sample Calculation:

Using equation for Train A (first hour):

m_n = 0.0 + 4.7 + 0.0

m_n = 4.7 mg

Using equation for Train A (post-first hour):

m_n = 1.0 + 4.3 + 0.4

m_n = 5.7 mg

Train A aggregate:

m_n = 4.7 + 5.7

m_n = **10.4** mg

Using equation for Train B:

m_n = 0.6 + 9 + 0.2

m_n = **9.8** mg

C_s - Concentration of particulate matter in tunnel gas, dry basis, corrected to STP, g/dscf
ASTM E2515 equation (13)

$$C_s = K_2 \times \frac{m_n}{V_{m(std)}}$$

Where:

K_2	=	Constant, 0.001 g/mg
m_n	=	Total mass of particulate matter collected in the sampling train, mg
$V_{m(std)}$	=	Volume of gas sampled corrected to dry standard conditions, dscf

Sample calculation:

For Train 1:

$$C_s = 0.001 \times \frac{10.4}{47.43}$$

C_s = **0.00022** g/dscf

For Train 2

$$C_s = 0.001 \times \frac{9.8}{46.85}$$

C_s = **0.00021** g/dscf

For Ambient Train

$$C_r = 0.001 \times \frac{0.1}{38.83}$$

C_r = **0.000003** g/dscf

E_T – Total Particulate Emissions, g
ASTM E2515 equation (15)

$$E_T = (c_s - c_r) \times Q_{std} \times \theta$$

Where:

C_s	=	Concentration of particulate matter in tunnel gas, g/dscf
C_r	=	Concentration particulate matter room air, g/dscf
Q_{std}	=	Average dilution tunnel gas flow rate, dscf/hr
θ	=	Total time of test run, minutes

Sample calculation:

For Train 1

E_T = (0.000219 - 0.000003) x 12180.4 x 330 /60

E_T = **14.52** g

For Train 2

E_T = (0.000209 - 0.000003) x 12180.4 x 330 /60

E_T = **13.84** g

Average

E = **14.18** g

Total emission values shall not differ by more than 7.5% from the total average emissions

7.5% of the average =	1.06
Train 1 difference =	0.34
Train 2 difference =	0.34

PR - Proportional Rate Variation

ASTM E2515 equation (16)

$$PR = \left[\frac{\theta \times V_{mi} \times V_s \times T_m \times T_{si}}{\theta_i \times V_m \times V_{si} \times T_{mi} \times T_s} \right] \times 100$$

Where:

θ	=	Total sampling time, min
θ_i	=	Length of recording interval, min
V_{mi}	=	Volume of gas sample measured by the dry gas meter during the “ith” time interval, dcf
V_m	=	Volume of gas sample as measured by dry gas meter, dcf
V_{si}	=	Average gas velocity in the dilution tunnel during the "ith" time interval, ft/sec
V_s	=	Average gas velocity in the dilution tunnel, ft/sec
T_{mi}	=	Absolute average dry gas meter temperature during the "ith" time interval, ^oR
T_m	=	Absolute average dry gas meter temperature, ^oR
T_{si}	=	Absolute average gas temperature in the dilution tunnel during the "ith" time interval, ^oR
T_s	=	Absolute average gas temperature in the dilution tunnel, ^oR

Sample calculation (for the first 1 minute interval of Train 1):

$$PR = \left(\frac{330 \times 0.099 \times 18.75 \times (88.0 + 460) \times (90.6 + 460)}{1 \times 48.779 \times 19.32 \times (105.2 + 460) \times (69.0 + 460)} \right) \times 100$$

PR = **66** %

PM_{RH} - Particulate emission rate for high fire test run, g/hr;
ASTM E3053 equation (9)

$$PM_{RH} = 60(E_{TH}/\theta_{H2})$$

Where,

E_{TH} = Total particulate emissions for high fire test run including kindling and start-up, g

θ_{H2} = Total duration of high fire test run, from ignition of kindling to end of test run, min.

Sample Calculation:

E_{TH} = 14.18

θ_{H2} = 330

PM_{RH} = 60(14.18 / 330)

PM_{RH} = **2.58** g/hr

PM_{FH} - Particulate emission factor for high fire test run, g/dry kg of fuel burned.

ASTM E3053 equation (10)

$$PM_{FH} = E_{TH}/M_{TFBHdb}$$

Sample Calculation:

E_{TH} = 14.18

M_{TFBHdb} = 18.47

PM_{FH} = 14.18 / 18.47

= **0.77** g/kg

PM_R - Particulate emission rate for low or medium fire test runs, g/hr
ASTM E3053 equation (12)

$$PM_R = 60(E_T/\theta)$$

Where,

E_T = Total particulate emissions for low or medium fire test runs from Test Method E2515, g

Sample Calculation:

E_T = N/A - Applicable to Low/Medium Fire Tests Only
θ = N/A - Applicable to Low/Medium Fire Tests Only

PM_R = 60(N/A / N/A)

PM_{RH} = **N/A** g/hr

PM_{FH} - Particulate emission factor for high fire test run, g/dry kg of fuel burned.
ASTM E3053 equation (13)

$$PM_F = E_T/M_{TFBdb}$$

Sample Calculation:

E_T = N/A - Applicable to Low/Medium Fire Tests Only
M_{TFBdb} = N/A - Applicable to Low/Medium Fire Tests Only

PM_{FH} = N/A / N/A
= **N/A** g/kg

Sample Calculations – ASTM E3053 & E2515

Client: FPI
Model: F5200
Run: 2

Equations used to calculate the parameters listed below are described in this appendix. Sample calculations are provided for each equation. The raw data and printout results from a sample run are also provided for comparison to the sample calculations.

M_{Fldb} – Weight of test fuel load, dry basis, lb (kg)

M_{SUdb} – Weight of start-up fuel, dry basis, lb (kg)

M_{Kdb} - Weight of kindling, dry basis, lb (kg)

M_{FREHdb} - Total weight of all remaining fuel at end of high fire test run, lb (kg)

M_{TFBHdb} - Total weight of all fuel burned during high fire test run, lb (kg), dry basis

BR_H – Dry burn rate for high fire test run, from time when test fuel load is added to end of test run, lb/h (kg/h)

M_{TFBdb} - Total weight of fuel burned during low or medium fire test run, lb (kg), dry basis

BR - Dry burn rate for low and medium fire test runs, lb/h (kg/h)

V_s – Average gas velocity in the dilution tunnel, ft/sec

Q_{sd} – Average gas flow rate in dilution tunnel, dscf/hr

$V_{m(std)}$ – Volume of gas sampled, corrected to dry standard conditions, dscf

m_n – Total particulate matter collected, mg

C_s - Concentration of particulate matter in tunnel gas, dry basis, corrected to STP, g/dscf

E_T – Total particulate emissions, g

PR - Proportional rate variation

PM_{RH} - Particulate emission rate for high fire test run, g/hr

PM_{FH} - Particulate emission factor for high fire test run, g/dry kg of fuel burned

PM_R – Particulate emission rate for low or medium fire test run, g/hr

PM_F – Particulate emission factor for low or medium fire test run, g/dry kg of fuel burned

M_{Fldb} – Weight of test fuel load, dry basis, lb (kg)
ASTM E3053 equation (1)

$$M_{Fldb} = \Sigma((M_{FLnwb})(100/(100 + MC_{FLn})))$$

Where,

M_{FLnwb}	=	Weight of each test fuel piece, n, in test fuel load per 8.4.1, wet basis, lb (kg)
MC_{FLn}	=	Average fuel moisture of test fuel piece, n, in test fuel load, % dry basis
n	=	individual test fuel pieces that comprise the test fuel load, as applicable.

Sample Calculation:

n	M_{FLnwb}	MC_{FLn}	$(M_{FLnwb})(100/(100 + MC_{FLn}))$		
1	10.21	21.1	10.21 (100) / (100+ 21.1)) =	8.43	
2	8.22	22.0	8.22 (100) / (100+ 22)) =	6.74	
3	9.77	22.1	9.77 (100) / (100+ 22.1)) =	8.00	
4	5.73	23.0	5.73 (100) / (100+ 23)) =	4.66	
5	8.69	22.6	8.69 (100) / (100+ 22.6)) =	7.09	
6	10.32	20.7	10.32 (100) / (100+ 20.7)) =	8.55	
7	0.00	NA	N/A	-	
			SUM	43.47	lbs

M_{Fldb} = **43.47** lbs

M_{Fldb} = **19.72** kg

M_{SUdb} – Weight of start-up fuel, dry basis, lb (kg)
ASTM E3053 equation (2)

$$M_{SUdb} = (M_{SUwb})(100/(100 + MC_{SU}))$$

Where,

M_{SUwb} = Total weight of start-up fuel pieces, wet basis, lb (kg)

MC_{SU} = Average fuel moisture of the piece(s) from which start-up fuel was split, % dry basis

Sample Calculation:

M_{SUwb} = N/A - Applicable to High Fire Tests Only

MC_{SU} = N/A - Applicable to High Fire Tests Only

M_{SUdb} = N/A (100/(100+ N/A)

M_{SUdb} = **N/A** lbs

= **N/A** kg

M_{Kdb} - Weight of kindling, dry basis, lb (kg)
ASTM E3053 equation (3)

$$M_{Kdb} = (M_{Kwb})(100/(100 + MC_K))$$

Where,

M_{Kwb} = Weight of kindling per 8.5.6, wet basis, lb (kg);

MC_K = Average moisture of kindling (may be assumed 10%), % dry basis.

Sample calculation:

M_{Kwb} = N/A - Applicable to High Fire Tests Only

MC_K = N/A - Applicable to High Fire Tests Only

M_{Kdb} = N/A (100/(100+ N/A)

M_{Kdb} = **N/A** lbs

= **N/A** kgs

M_{FREHdb} - Total weight of all remaining fuel at end of high fire test run, lb (kg)
ASTM E3053 equation (4)

$$M_{FREHdb} = M_{RSUBdb} + M_{FLEHdb}$$

Where,

M_{RSUBdb} = Weight of residual start-up fuel bed when high fire test load added, lb (kg)

M_{FLEHdb} = Weight of unburned portion of test fuel load at the end of the high fire test run, lb (kg)

Sample calculation:

M_{RSUBdb} = N/A - Applicable to High Fire Tests Only

M_{FLEHdb} = N/A - Applicable to High Fire Tests Only

M_{FREHdb} = N/A + N/A

M_{FREHdb} = **N/A** lbs

= **N/A** kg

M_{TFBHdb} - Total weight of all fuel burned during high fire test run, lb (kg), dry basis
ASTM E3053 equation (5)

$$M_{TFBHdb} = M_{Kdb} + M_{SUdb} + M_{FLdb} - M_{FREHdb}$$

Sample Calculation:

M_{Kdb} = N/A

M_{SUdb} = N/A

M_{FLdb} = N/A

M_{FREHdb} = N/A

M_{TFBHdb} = N/A + N/A + N/A - N/A

= **N/A** lbs

= **N/A** kg

BR_H – Dry burn rate for high fire test run, from time when test fuel load is added to end of test run, lb/h (kg/h)

ASTM E3053 equation (6)

$$BR_H = 60\,(M_{FLdb} - M_{FLEHdb})/\theta_{H1}$$

Where,

θ_{H1} = Total duration of high fire test run, from time when test fuel load is added to end of test run, min.

Sample calculation:

M_{FLdb} = N/A - Applicable to High Fire Tests Only

M_{FLEHdb} = N/A - Applicable to High Fire Tests Only

θ_{H1} = N/A - Applicable to High Fire Tests Only

$$BR_H = \frac{60\,(\text{N/A} - \text{N/A})}{\text{N/A}}$$

BR_H = **N/A** lb/hr

= **N/A** kg/hr

M_{TFBdb} - Total weight of fuel burned during low or medium fire test run, lb (kg), dry basis
ASTM E3053 equation (7)

$$M_{TFBdb} = M_{FLdb} - M_{FREdb}$$

Where,

M_{FLdb} = Total weight of fuel burned during low or medium fire test run, lb (kg), dry basis

M_{FREdb} = Weight of remaining fuel at end of low or medium fire test run, lb (kg)

Sample Calculation:

M_{FLdb} = 43.47

M_{FREdb} = 0.00

M_{TFBdb} = 43.47 - 0.00

= **43.47** lbs

= **19.72** kg

BR - Dry burn rate for low and medium fire test runs, lb/h (kg/h)
ASTM E3053 equation (8)

$$BR = \frac{60\ M_{TFBdb}}{\theta}$$

Where,

θ = Total test run duration for low or medium fire test run, min.

Sample Calculation:

M_{TFBdb} = 43.47
θ = 1110

$$BR = \frac{60 \times 43.47}{1110}$$

BR = **2.35** lb/hr
= **1.07** kg/hr

V_s – Average gas velocity in the dilution tunnel, ft/sec
ASTM E2515 equation (9)

$$v_s = F_P \times k_p \times C_p \times (\sqrt{\Delta P})_{avg} \times \sqrt{\frac{T_{s(avg)}}{P_s \times M_s}}$$

Where:

F_p	=	Adjustment factor for pitot tube center point reading = $\frac{V_{strav}}{V_{scent}}$, ASTM E2515 Equation (1)
v_{scent}	=	Dilution tunnel velocity calculated after the multi-point pitot traverse at the center, ft/sec
v_{strav}	=	Dilution tunnel velocity calculated after the multi-point pitot traverse, ft/sec
k_p	=	Pitot tube constant, 85.49
C_p	=	Pitot tube coefficient: 0.99, unitless
ΔP*	=	Velocity pressure in the dilution tunnel, in H_2O
T_s	=	Absolute average gas temperature in the dilution tunnel, °R; (°R = °F + 460)
P_s	=	Absolute average gas static pressure in dilution tunnel, = $P_{bar} + P_g$, in Hg
P_{bar}	=	Barometric pressure at test site, in. Hg
P_g	=	Static pressure of tunnel, in. H_20; (in Hg = in H_20/13.6)
M_s	=	**The dilution tunnel wet molecular weight; M_s = 28.78 assuming a dry weight of 29 lb/lb-mole

Sample calculation:

$$Fp = \frac{18.85}{19.05} = 0.989$$

$$V_s = 0.989 \times 85.49 \times 0.99 \times 0.278 \times \left(\frac{84.6 + 460}{\left(30.13 + \frac{-0.25}{13.6}\right) \times 28.78} \right)^{1/2}$$

V_s = **18.42** ft/s

*The ASTM test standard mistakenly has the square root of the average delta p instead of the average of the square root of delta p. The current EPA Method 2 is also incorrect. This was verified by Mike Toney at EPA.

**The ASTM test standard mistakenly identifies Ms as the dry molecular weight. It should be the wet molecular weight as indicated in EPA Method 2.

Q_{sd} – Average gas flow rate in dilution tunnel, dscf/hr
ASTM E2515 equation (3)

$$Q_{sd} = 3600 \times (1 - B_{ws}) \times v_s \times A \times \frac{T_{std}}{T_{s(avg)}} \times \frac{P_s}{P_{std}}$$

Where:

3600	=	Conversion from seconds to hours (ASTM method uses 60 to convert in minutes)
B_{ws}	=	Water vapor in gas stream, proportion by volume; assume 2%
A	=	Cross sectional area of dilution tunnel, ft^2
T_{std}	=	Standard absolute temperature, 528 °R
P_s	=	Absolute average gas static pressure in dilution tunnel, = P_{bar} + P_g , in Hg
$T_{s(avg)}$	=	Absolute average gas temperature in the dilution tunnel, °R; (°R = °F + 460)
P_{std}	=	Standard absolute pressure, 29.92 in Hg

Sample calculation:

$$Q_{sd} = 3600 \times (1 - 0.02) \times 18.42 \times 0.1963 \times \frac{528}{84.6 + 460} \times \frac{30.13 + \frac{-0.25}{13.6}}{29.92}$$

Q_{sd} = **12450.0** dscf/hr

$V_{m(std)}$ – Volume of Gas Sampled Corrected to Dry Standard Conditions, dscf
ASTM E2515 equation (6)

$$V_{m(std)} = K_1 V_m Y \frac{P_{bar} + \frac{\Delta H}{13.6}}{T_m}$$

Where:

K_1	=	17.64 °R/in. Hg
V_m	=	Volume of gas sample measured at the dry gas meter, dcf
Y	=	Dry gas meter calibration factor, dimensionless
P_{bar}	=	Barometric pressure at the testing site, in. Hg
ΔH	=	Average pressure differential across the orifice meter, in. H_2O
T_m	=	Absolute average dry gas meter temperature, °R

Sample Calculation:

Using equation for Train 1:

$$V_{m(std)} = 17.64 \times 167.482 \times 1.004 \times \frac{\left(30.13 + \frac{2.26}{13.6}\right)}{(100.9 + 460)}$$

$V_{m(std)}$ = **160.201** dscf

Using equation for Train 2:

$$V_{m(std)} = 17.64 \times 166.665 \times 1 \times \frac{\left(30.13 + \frac{2.26}{13.6}\right)}{(99.6 + 460)}$$

$V_{m(std)}$ = **159.138** dscf

Using equation for ambient train:

$$V_{m(std)} = 17.64 \times 128.50 \times 0.999 \times \frac{\left(\underline{30.13} + \frac{0.00}{13.6}\right)}{(73.8 + 460)}$$

$V_{m(std)}$ = **127.801** dscf

m_n – Total Particulate Matter Collected, mg
ASTM E2515 Equation (12)

$$m_n = m_p + m_f + m_g$$

Where:

m_p = mass of particulate matter from probe, mg

m_f = mass of particulate matter from filters, mg

m_g = mass of particulate matter from filter seals, mg

Sample Calculation:

Using equation for Train A (first hour):

m_n = 0.0 + 1.7 + 0.0

m_n = 1.7 mg

Using equation for Train A (post-first hour):

m_n = 0.0 + 3.2 + 0.4

m_n = 3.6 mg

Train A aggregate:

m_n = 1.7 + 3.6

m_n = **5.3** mg

Using equation for Train B:

m_n = 0 + 4.9 + 0.2

m_n = **5.1** mg

C_s - Concentration of particulate matter in tunnel gas, dry basis, corrected to STP, g/dscf
ASTM E2515 equation (13)

$$C_s = K_2 \times \frac{m_n}{V_{m(std)}}$$

Where:

K_2	=	Constant, 0.001 g/mg
m_n	=	Total mass of particulate matter collected in the sampling train, mg
$V_{m(std)}$	=	Volume of gas sampled corrected to dry standard conditions, dscf

Sample calculation:

For Train 1:

$$C_s = 0.001 \times \frac{5.3}{160.20}$$

C_s = **0.00003** g/dscf

For Train 2

$$C_s = 0.001 \times \frac{5.1}{159.14}$$

C_s = **0.00003** g/dscf

For Ambient Train

$$C_r = 0.001 \times \frac{0.1}{127.80}$$

C_r = **0.000001** g/dscf

E_T – Total Particulate Emissions, g
ASTM E2515 equation (15)

$$E_T = (c_s - c_r) \times Q_{std} \times \theta$$

Where:

C_s	=	Concentration of particulate matter in tunnel gas, g/dscf
C_r	=	Concentration particulate matter room air, g/dscf
Q_{std}	=	Average dilution tunnel gas flow rate, dscf/hr
θ	=	Total time of test run, minutes

Sample calculation:

For Train 1

E_T = (0.000033 - 0.000001) x 12450.0 x 1110 /60

E_T = **7.44** g

For Train 2

E_T = (0.000032 - 0.000001) x 12450.0 x 1110 /60

E_T = **7.20** g

Average

E = **7.32** g

Total emission values shall not differ by more than 7.5% from the total average emissions

7.5% of the average =	0.55
Train 1 difference =	0.12
Train 2 difference =	0.12

PR - Proportional Rate Variation

ASTM E2515 equation (16)

$$PR = \left[\frac{\theta \times V_{mi} \times V_s \times T_m \times T_{si}}{\theta_i \times V_m \times V_{si} \times T_{mi} \times T_s} \right] \times 100$$

Where:

θ	=	Total sampling time, min
θ_i	=	Length of recording interval, min
V_{mi}	=	Volume of gas sample measured by the dry gas meter during the “ith” time interval, dcf
V_m	=	Volume of gas sample as measured by dry gas meter, dcf
V_{si}	=	Average gas velocity in the dilution tunnel during the "ith" time interval, ft/sec
V_s	=	Average gas velocity in the dilution tunnel, ft/sec
T_{mi}	=	Absolute average dry gas meter temperature during the "ith" time interval, ^oR
T_m	=	Absolute average dry gas meter temperature, ^oR
T_{si}	=	Absolute average gas temperature in the dilution tunnel during the "ith" time interval, ^oR
T_s	=	Absolute average gas temperature in the dilution tunnel, ^oR

Sample calculation (for the first 1 minute interval of Train 1):

$$PR = \left(\frac{1110 \times 1.462 \times 18.42 \times (107.0 + 460) \times (\#\#\#\# + 460)}{10 \times 167.48 \times 19.51 \times (84.6 + 460) \times (96.0 + 460)} \right) \times 100$$

PR = **96** %

PM_{RH} - Particulate emission rate for high fire test run, g/hr;
ASTM E3053 equation (9)

$$PM_{RH} = 60(E_{TH}/\theta_{H2})$$

Where,

E_{TH} = Total particulate emissions for high fire test run including kindling and start-up, g

θ_{H2} = Total duration of high fire test run, from ignition of kindling to end of test run, min.

Sample Calculation:

E_{TH} = N/A - Applicable to High Fire Tests Only

θ_{H2} = N/A - Applicable to High Fire Tests Only

PM_{RH} = 60(N/A / N/A)

PM_{RH} = **N/A** g/hr

PM_{FH} - Particulate emission factor for high fire test run, g/dry kg of fuel burned.

ASTM E3053 equation (10)

$$PM_{FH} = E_{TH}/M_{TFBHdb}$$

Sample Calculation:

E_{TH} = N/A - Applicable to High Fire Tests Only

M_{TFBHdb} = N/A - Applicable to High Fire Tests Only

PM_{FH} = N/A / N/A

= **N/A** g/kg

PM_R - Particulate emission rate for low or medium fire test runs, g/hr
ASTM E3053 equation (12)

$$PM_R = 60(E_T/\theta)$$

Where,

E_T = Total particulate emissions for low or medium fire test runs from Test Method E2515, g

Sample Calculation:

E_T = 7.32
θ = 1110

PM_R = 60(7.32 / 1110)

PM_{RH} = **0.40** g/hr

PM_{FH} - Particulate emission factor for high fire test run, g/dry kg of fuel burned.
ASTM E3053 equation (13)

$$PM_F = E_T/M_{TFBdb}$$

Sample Calculation:

E_T = 7.32
M_{TFBdb} = 19.72

PM_{FH} = 7.32 / 19.72
= **0.37** g/kg

WOOD STOVE TEST DATA PACKET
ASTM E3053/E2515

Run 1 Data Summary

Client: FPI
Model: F5200
Job #: 19-464
Tracking #: 0024
Test Date: 4/23/2019

4/29/2019

Techician Signature | Date

TEST RESULTS - ASTM E3053 / ASTM E2515

Client: FPI
Model: F5200
Run #: 1

Job #: 19-464
Tracking #: 0024
Technician: SJB
Date: 4/23/2019

Burn Rate (kg/hr):	3.21

	Ambient Sample	Sample Train A	Sample Train B	1st Hour Filter
Total Sample Volume (ft^3)	38.908	48.779	48.249	8.705
Average Gas Velocity in Dilution Tunnel (ft/sec)	18.75			
Average Gas Flow Rate in Dilution Tunnel (dscf/hr)	12180.4			
Average Gas Meter Temperature (°F)	70.8	90.6	89.0	75.9
Total Sample Volume (dscf)	38.827	47.425	46.854	8.695
Average Tunnel Temperature (°F)	105.2			
Total Time of Test (min)	330			
Total Particulate Catch (mg)	0.1	10.4	9.8	4.7
Particulate Concentration, dry-standard (g/dscf)	0.0000026	0.0002193	0.0002092	0.0005405
Total PM Emissions (g)	0.17	14.52	13.84	6.55
Particulate Emission Rate (g/hr)	0.03	2.64	2.52	6.55
Emissions Factor (g/kg)	-	0.78	0.75	-
Difference from Average Total Particulate Emissions (g)	-	0.34	0.34	-
Difference from Average Emissions Factor (g/kg)	-	0.02	0.02	-

Final Average Results	
Total Particulate Emissions (g)	14.18
Particulate Emission Rate (g/hr)	2.58
Emissions Factor (g/kg)	0.77
HHV Efficiency (%)	75.3%
LHV Efficiency (%)	80.6%
CO Emissions (g/min)	1.13

Quality Checks	Requirement	Observed	Result
Dual Train Precision	Each train within 7.5% of average emissions (in grams), or emission factors within 0.5 g/kg	See Above	OK
Filter Temps	>80 °F, <90 °F	Min: 80 / Max: 88	OK
Face Velocity	< 30 ft/min	8.8	OK
Leakage Rate	Less than 4% of average sample rate	0 cfm	OK
Ambient Temp	55-90 °F	Min: 64 / Max: 73	OK
Negative Probe Weight Evaluation	<5% of Total Catch	Probe Catch Not Negative	OK
Pro-Rate Variation	90% of readings between 90-110%; none greater than 120% or less than 80%	See Data Tabs	CHECK 10 MIN. INTERVAL PRO-RATES

B415.1 Efficiency Results

Manufacturer:	FPI
Model:	F5200
Date:	04/23/19
Run:	1
Control #:	19-464
Test Duration:	274
Output Category:	High

Test Results in Accordance with CSA B415.1-09

	HHV Basis	LHV Basis
Overall Efficiency	75.3%	80.6%
Combustion Efficiency	98.6%	98.6%
Heat Transfer Efficiency	76.4%	81.7%

Output Rate (kJ/h)	49,631	47,081	**(Btu/h)**
Burn Rate (kg/h)	3.30	7.27	**(lb/h)**
Input (kJ/h)	65,880	62,494	**(Btu/h)**

Test Load Weight (dry kg)	15.07	33.22	**dry lb**
MC wet (%)	18.78		
MC dry (%)	23.12		
Particulate (g)	14.18		
CO (g)	309		
Test Duration (h)	4.57		

Emissions	Particulate	CO
g/MJ Output	0.06	1.37
g/kg Dry Fuel	0.94	20.53
g/h	3.10	67.77
g/min	0.05	1.13
lb/MM Btu Output	0.15	3.17

Air/Fuel Ratio (A/F)	8.91

VERSION: **2.2** **12/14/2009**

HIGH FIRE FUEL LOAD DATA - ASTM E3053

Client:	FPI	Job #:	19-464
Model:	F5200	Tracking #	0024
Run #:	1	Technician:	SJB
		Date:	4/23/2019

Nominal Loading Density (lbs/ft^3, wet basis):	10		
Usable Firebox Volume (ft^3):	4.42		
Target Load Weight (lbs):	44.20		
Total Load Weight Range (lbs):	42.00	to	46.40
Core Load Weight Range (lbs):	19.90	to	28.70
Remainder Load Weight Range (lbs):	15.50	to	24.30
Core Load Piece Range (lbs):	6.60	to	11.10
Remainder Load Piece Range (lbs):	4.40	to	24.30
Max Allowable Kindling Weight (lbs):	9.19		
Max Allowable Start-up Fuel Weight (lbs):	13.79		

CORE LOAD DATA

				Fuel Piece Moisture Readings (%DB)					Dry Weight	
Piece #	Length (in)	Weight (lbs)	Within Spec?	1	2	3	Ave.	Within Spec?	lbs	kg
1	20.00	7.61	In Range	24.9	26.7	27.4	26.3	In Range	6.02	2.73
2	20.00	7.96	In Range	25.0	19.8	16.7	20.5	In Range	6.61	3.00
3	20.00	10.74	In Range	26.2	22.9	25.2	24.8	In Range	8.61	3.90
Core Load Wt. (lbs)		26.31	In Range							

REMAINDER LOAD DATA (1 to 3 Pieces)

				Fuel Piece Moisture Readings (%DB)					Dry Weight	
Piece #	Length (in)	Weight (lbs)	Within Spec?	1	2	3	Ave.	Within Spec?	lbs	kg
1	20.00	7.14	In Range	21.9	22.9	27.4	24.1	In Range	5.75	2.61
2	20.00	5.93	In Range	19.6	18.6	25.9	21.4	In Range	4.89	2.22
3	20.00	6.59	In Range	19.0	26.1	17.0	20.7	In Range	5.46	2.48
Remainder Load (lbs)		19.66	In Range							

Total Load Weight (lbs):	45.97	In Range	
Core Load % of Total Weight:	57%	In Range	45-65%
Remainder % of Total Weight:	43%	In Range	35-55%
Total Load % of Target Weight:	104%	In Range	95-105%
Actual Fuel Loading Density (lb/ft3):	10.4		
Total Load Average Moisture Content (%DB):	23.1	In Range	19-25%
Total Load Average Moisture Content (%WB):	18.8		
Total Test Load Weight (dry basis):	37.34 lbs	16.94 kg	

KINDLING AND START-UP FUEL

		Kindling Moisture Readings (%DB)					Dry Weight	
Kindling Weight (lbs)	Within Spec?	1	2	3	Avg.	Within Spec?	lbs	kg
5.95	In Range	10	10	10	10.0	In Range	5.41	2.45

		Start-up Moisture Readings (%DB)					Dry Weight	
Start-up Fuel Wt. (lb)	Within Spec?	1	2	3	Avg.	Within Spec?	lbs	kg
9.17	In Range	18.7	19.4	22.7	20.3	In Range	7.62	3.46

TEST FUEL LOADING RANGE

Allowable Residual Start-up Fuel Range (lb):	4.6	to	9.2	
Actual Residual Start-up Fuel Weight (lb):		4.6		In Range

TEST END POINT

High Fire Test Run End Point Range:	4.1	to	5.1	lb
Actual Fuel Load Ending Weight (lb):		5.1		In Range

Total Weight All Fuel Added:	61.09 lbs, wet basis	Total Weight All Fuel Burned (dry basis):	40.72 lbs
	50.37 lbs, dry basis		18.47 kg
	22.85 kg, dry basis		

DILUTION TUNNEL & MISC. DATA - ASTM E3053 / E2515

Client:	FPI	Job #:	19-464
Model:	F5200	Tracking #:	0024
Run #:	1	Technician:	SJB
Test Start Time:	9:36	Date:	4/23/2019
Test Type:	High Fire		

Recording Interval (min):	1
Total Sampling Time (min):	330
High Fire Test Load Time (min):	56

Meter Box γ Factor:	1.004	(A)
Meter Box γ Factor:	1.000	(B)
Meter Box γ Factor:	0.999	(Ambient)

	Pre-Test	Post Test	Avg.
Barometric Pressure (in. Hg)	30.07	30.05	30.06
Relative Humidity (%)	51.4	39.7	
Room Air Velocity (ft/min)	0	0	
Scale Audit (lbs)	10.0	10.0	
Ambient Sample Volume:		38.908	ft^3

Induced Draft Check (in. H_2O):	0
Smoke Capture Check (%):	100%
Date Flue Pipe Last Cleaned:	4/23/2019

Sample Train Post-Test Leak Checks

(A)	0.000	cfm @	-14	in. Hg
(B)	0.000	cfm @	-13	in. Hg
(Ambient)	0.002	cfm @	-14	in. Hg

DILUTION TUNNEL FLOW

Traverse Data

Point	dP (in H_2O)	Temp (°F)
1	0.078	74
2	0.092	74
3	0.080	74
4	0.066	74
5	0.078	74
6	0.090	74
7	0.086	74
8	0.072	74
Center	0.082	74

Static Pressure: -0.250 in. H_2O

Dilution Tunnel H_2O:	2.00	percent
Tunnel Diameter:	6	inches
Pitot Tube Cp:	0.99	[unitless]
Dilution Tunnel MW(dry):	29.00	lb/lb-mole
Dilution Tunnel MW(wet):	28.78	lb/lb-mole
Tunnel Area:	0.1963	ft^2
V_{strav}:	18.84	ft/sec
V_{scent}:	19.04	ft/sec
F_p:	0.989	[ratio]
Initial Tunnel Flow:	215.7	scf/min

TEST FUEL PROPERTIES

ASTM 3053-17 - Table A1.1 Fuel Properties by Fuel Species

Select Fuel Type	Species	%C	%H	%O	%Ash	MJ/kg	BTU/lb
	Ash, White	49.70	6.90	43.00	0.30	20.75	8927
	Beech	48.70	5.80	44.70	0.60	18.80	8088
	Birch, Sweet	49.80	6.50	43.40	0.30	20.12	8656
	Birch, Yellow	49.80	6.50	43.40	0.30	20.12	8656
	Doug Fir (Coast, Interior West/North)	48.73	6.87	43.90	0.50	19.81	8522
	Doug Fir (Interioir South)	48.73	6.87	43.90	0.50	19.81	8522
	Elm, Rock	50.40	6.60	42.30	0.70	20.49	8815
	Elm, Soft	50.40	6.60	42.30	0.70	20.49	8815
	Gum, Red	50.88	6.06	41.57	1.28	19.72	8478
	Larch, Western	50.54	6.36	42.40	0.70	17.58	7558
X	Maple, Hard	50.64	6.02	41.74	1.35	19.96	8587
	Maple, Sugar	50.64	6.02	41.74	1.35	19.96	8587
	Oak, Red	49.50	6.62	43.70	0.20	20.20	8690
	Oak, White	50.40	6.59	42.70	0.20	20.50	8819
	Pine, Southern	52.60	7.00	40.10	1.31	22.30	9587
	Pine, Southern Long Leaf	52.60	7.02	40.10	1.30	22.30	9594
	Other						

WOODSTOVE PREBURN DATA

Client:	FPI	Job #:	19-464
Model:	F5200	Tracking #:	0024
Run #:	1	Technician:	SJB
		Date:	4/23/2019

High Fire Test Begins from Cold Start, No Preburn is Performed

BOX A TEST DATA - ASTM E3053 / ASTM E2515

Client: FPI
Model: F5200
Run #: 1

Job #: 19-464
Tracking #: 0024
Technician: SJB
Date: 4/23/2019

	Particulate Sampling Data							Fuel Weight (lb)		Temperature Data (°F)			
Elapsed Time (min)	Gas Meter (ft^3)	Sample Rate (cfm)	Dilution Tunnel dP (in H_2O)	Orifice dH (in H_2O)	Meter Temp (°F)	Meter Vacuum (in Hg)	Pro. Rate (%)	Scale Reading	Weight Change	Dilution Tunnel	Flue	Filter	Ambient
0	0.001		0.075	0.01	69	-0.13		4.0		74	67	80	64
1	0.100	0.099	0.084	2.27	69	-1.27	66	3.7	-0.3	88	152	81	64
2	0.240	0.140	0.075	2.15	69	-1.47	105	3.0	-0.7	170	466	87	64
3	0.388	0.148	0.073	2.34	69	-0.65	109	2.5	-0.5	133	507	88	64
4	0.531	0.143	0.074	2.33	69	-2.87	102	2.3	-0.2	100	411	85	64
5	0.680	0.149	0.080	2.33	69	-2.46	102	2.2	-0.1	93	389	84	64
6	0.823	0.143	0.068	2.30	69	-2.36	105	2.1	-0.1	89	386	83	64
7	0.972	0.149	0.078	2.33	69	-1.57	102	2.0	-0.1	88	384	83	64
8	1.116	0.144	0.077	2.31	69	-0.2	100	1.9	-0.1	87	374	83	65
9	1.264	0.148	0.077	2.29	69	-0.19	104	8.6	6.7	110	456	84	65
10	1.407	0.143	0.081	2.29	70	-2.51	97	3.3	-5.3	95	396	84	65
11	1.555	0.148	0.078	2.28	70	-2.57	102	3.2	-0.1	92	379	83	65
12	1.698	0.143	0.076	2.29	70	-0.57	100	3.1	-0.1	91	380	83	65
13	1.845	0.147	0.086	2.28	70	-2.75	96	2.9	-0.2	90	383	83	65
14	1.988	0.143	0.075	2.28	71	-2.91	100	2.8	-0.1	90	389	82	65
15	2.135	0.147	0.078	2.26	71	0	101	2.7	-0.1	90	394	82	65
16	2.279	0.144	0.080	2.28	71	-0.2	98	2.5	-0.2	91	398	81	65
17	2.424	0.145	0.071	2.26	71	-2.43	104	2.5	0	91	399	81	65
18	2.568	0.144	0.071	2.24	72	-0.11	103	2.3	-0.2	91	406	81	65
19	2.713	0.145	0.080	2.24	72	-1.21	98	2.2	-0.1	91	408	81	65
20	2.859	0.146	0.075	2.27	73	-1.32	102	2.1	-0.1	91	407	82	65
21	3.003	0.144	0.083	2.24	73	-1.79	96	2.1	0	91	404	82	65
22	3.149	0.146	0.079	2.24	73	-2.81	101	4.4	2.3	106	461	83	66
23	3.292	0.143	0.077	2.23	73	-0.37	99	4.2	-0.2	98	426	83	66
24	3.440	0.148	0.075	2.34	74	-0.14	104	4.1	-0.1	96	417	83	66
25	3.586	0.146	0.085	2.31	74	-1.5	96	3.9	-0.2	95	412	83	65
26	3.734	0.148	0.075	2.32	74	-1.84	103	3.7	-0.2	94	409	83	65
27	3.879	0.145	0.077	2.30	75	-0.35	100	3.7	0	94	405	83	65
28	4.026	0.147	0.077	2.22	75	-0.48	103	10.3	6.6	113	473	84	66
29	4.169	0.143	0.072	2.19	76	-0.53	102	10.0	-0.3	101	444	84	66
30	4.317	0.148	0.076	2.19	76	-0.88	103	9.9	-0.1	101	461	84	66
31	4.461	0.144	0.073	2.29	76	-1.12	102	9.5	-0.4	102	483	83	66
32	4.609	0.148	0.076	2.34	77	-0.48	103	9.3	-0.2	102	500	82	66

BOX A TEST DATA - ASTM E3053 / ASTM E2515

Client: FPI
Model: F5200
Run #: 1

Job #: 19-464
Tracking #: 0024
Technician: SJB
Date: 4/23/2019

	Particulate Sampling Data							Fuel Weight (lb)		Temperature Data (°F)			
Elapsed Time (min)	Gas Meter (ft^3)	Sample Rate (cfm)	Dilution Tunnel dP (in H_2O)	Orifice dH (in H_2O)	Meter Temp (°F)	Meter Vacuum (in Hg)	Pro. Rate (%)	Scale Reading	Weight Change	Dilution Tunnel	Flue	Filter	Ambient
33	4.754	0.145	0.082	2.28	77	-2.77	97	9.1	-0.2	103	514	82	66
34	4.903	0.149	0.075	2.28	77	-2.3	104	8.8	-0.3	104	525	83	66
35	5.047	0.144	0.075	2.26	78	0	101	8.4	-0.4	104	529	83	66
36	5.196	0.149	0.069	2.24	78	-2.65	109	8.3	-0.1	105	534	83	66
37	5.340	0.144	0.078	2.26	78	-2.43	99	8.1	-0.2	106	541	83	67
38	5.488	0.148	0.077	2.24	78	-1.12	102	7.8	-0.3	107	542	83	67
39	5.631	0.143	0.075	2.24	79	0	100	7.6	-0.2	106	545	83	66
40	5.779	0.148	0.077	2.22	79	-0.22	102	7.3	-0.3	107	546	83	67
41	5.921	0.142	0.077	2.23	79	-0.71	98	7.2	-0.1	106	547	83	67
42	6.069	0.148	0.076	2.22	80	-2.73	103	7.0	-0.2	107	548	83	67
43	6.211	0.142	0.076	2.21	80	-0.16	99	6.8	-0.2	107	548	83	67
44	6.359	0.148	0.075	2.21	80	0	103	6.6	-0.2	107	548	83	67
45	6.501	0.142	0.074	2.29	81	-0.81	100	6.4	-0.2	108	549	83	67
46	6.651	0.150	0.083	2.27	81	-2.74	100	6.1	-0.3	108	551	83	67
47	6.795	0.144	0.086	2.26	81	-0.01	94	6.0	-0.1	108	552	83	68
48	6.945	0.150	0.078	2.25	81	-0.24	103	5.8	-0.2	108	553	83	68
49	7.088	0.143	0.079	2.25	82	-0.76	97	5.6	-0.2	108	552	83	68
50	7.238	0.150	0.070	2.25	82	-2.44	108	5.5	-0.1	108	549	83	68
51	7.381	0.143	0.070	2.25	82	-2.71	103	5.3	-0.2	108	546	82	67
52	7.531	0.150	0.080	2.25	82	-0.03	101	5.1	-0.2	107	544	82	68
53	7.675	0.144	0.073	2.26	83	-1.16	101	5.0	-0.1	107	544	82	68
54	7.824	0.149	0.079	2.25	83	-1.12	101	4.8	-0.2	107	545	82	68
55	7.968	0.144	0.078	2.26	83	-0.23	98	4.6	-0.2	108	547	83	68
56	8.118	0.150	0.079	2.24	83	-1.22	103	50.6	46	125	614	84	68
57	8.259	0.141	0.071	2.18	84	-0.13	103	49.7	-0.9	137	667	86	69
58	8.408	0.149	0.083	2.27	84	-2.03	100	49.4	-0.3	122	614	86	69
59	8.553	0.145	0.075	2.26	84	-0.08	102	49.2	-0.2	119	601	85	69
60	8.706	0.153	0.078	2.33	84	-0.35	105	48.9	-0.3	116	600	84	68
61	8.851	0.145	0.077	2.02	84	0	100	48.7	-0.2	115	598	83	69
62	9.001	0.150	0.068	2.29	85	-1.02	110	48.5	-0.2	114	589	84	69
63	9.146	0.145	0.081	2.28	85	-1.19	97	48.3	-0.2	116	586	84	69
64	9.296	0.150	0.076	2.27	85	-2.52	104	48.0	-0.3	115	586	85	69
65	9.441	0.145	0.075	2.26	85	-0.02	101	47.8	-0.2	115	584	84	68

BOX A TEST DATA - ASTM E3053 / ASTM E2515

Client: FPI
Model: F5200
Run #: 1

Job #: 19-464
Tracking #: 0024
Technician: SJB
Date: 4/23/2019

	Particulate Sampling Data							Fuel Weight (lb)		Temperature Data (°F)			
Elapsed Time (min)	Gas Meter (ft^3)	Sample Rate (cfm)	Dilution Tunnel dP (in H_2O)	Orifice dH (in H_2O)	Meter Temp (°F)	Meter Vacuum (in Hg)	Pro. Rate (%)	Scale Reading	Weight Change	Dilution Tunnel	Flue	Filter	Ambient
66	9.590	0.149	0.070	2.26	85	-0.05	108	47.6	-0.2	115	585	84	69
67	9.734	0.144	0.068	2.25	86	0	105	47.4	-0.2	115	585	84	69
68	9.883	0.149	0.078	2.24	86	-0.96	102	47.1	-0.3	114	585	84	69
69	10.027	0.144	0.077	2.25	86	-2.75	99	46.9	-0.2	115	581	84	69
70	10.176	0.149	0.081	2.22	86	-2.27	100	46.7	-0.2	114	580	84	69
71	10.320	0.144	0.074	2.23	86	-1.63	101	46.5	-0.2	114	578	84	70
72	10.469	0.149	0.077	2.20	86	0	102	46.3	-0.2	115	575	83	70
73	10.615	0.146	0.083	2.32	86	-2.15	97	46.1	-0.2	115	576	83	69
74	10.767	0.152	0.075	2.32	87	-0.63	106	45.9	-0.2	115	574	83	69
75	10.914	0.147	0.082	2.31	87	-1.83	98	45.7	-0.2	114	573	83	70
76	11.064	0.150	0.074	2.30	87	-0.11	105	45.5	-0.2	114	570	83	70
77	11.228	0.164	0.077	2.33	87	-0.03	112	45.2	-0.3	113	568	83	70
78	11.378	0.150	0.081	2.31	87	-2.62	100	45.0	-0.2	112	564	83	70
79	11.527	0.149	0.072	2.31	87	-0.22	105	44.8	-0.2	112	556	83	70
80	11.676	0.149	0.077	2.29	88	-2.31	102	44.6	-0.2	112	552	83	70
81	11.827	0.151	0.075	2.30	88	-2.14	104	44.4	-0.2	111	549	83	70
82	11.974	0.147	0.073	2.31	88	-1.92	103	44.2	-0.2	111	546	83	70
83	12.125	0.151	0.074	2.30	88	-0.09	105	44.0	-0.2	110	544	83	70
84	12.272	0.147	0.080	2.30	88	-1.15	98	43.7	-0.3	110	541	83	70
85	12.423	0.151	0.074	2.31	88	-0.07	105	43.6	-0.1	110	537	84	70
86	12.568	0.145	0.076	2.31	88	-1.85	99	43.4	-0.2	109	536	84	70
87	12.720	0.152	0.079	2.32	89	-0.21	102	43.1	-0.3	109	534	84	70
88	12.866	0.146	0.075	2.29	89	-0.48	101	43.0	-0.1	110	532	84	70
89	13.017	0.151	0.077	2.28	89	-0.2	103	42.8	-0.2	109	533	83	70
90	13.163	0.146	0.081	2.29	89	-2.54	97	42.6	-0.2	109	530	83	71
91	13.316	0.153	0.076	2.30	89	-2.49	105	42.4	-0.2	109	528	83	70
92	13.462	0.146	0.078	2.29	89	-1.04	98	42.2	-0.2	108	527	83	71
93	13.613	0.151	0.078	2.28	89	-0.01	102	42.0	-0.2	108	526	83	71
94	13.760	0.147	0.068	2.28	89	-1.4	106	41.8	-0.2	108	523	83	70
95	13.911	0.151	0.079	2.29	89	-0.11	101	41.6	-0.2	108	526	83	70
96	14.057	0.146	0.086	2.29	89	-2.83	94	41.4	-0.2	109	525	83	70
97	14.207	0.150	0.080	2.30	90	-2.46	100	41.1	-0.3	109	526	83	71
98	14.354	0.147	0.080	2.29	90	-1.72	98	41.0	-0.1	108	527	83	71

BOX A TEST DATA - ASTM E3053 / ASTM E2515

Client: FPI
Model: F5200
Run #: 1

Job #: 19-464
Tracking #: 0024
Technician: SJB
Date: 4/23/2019

	Particulate Sampling Data							Fuel Weight (lb)		Temperature Data (°F)			
Elapsed Time (min)	Gas Meter (ft^3)	Sample Rate (cfm)	Dilution Tunnel dP (in H_2O)	Orifice dH (in H_2O)	Meter Temp (°F)	Meter Vacuum (in Hg)	Pro. Rate (%)	Scale Reading	Weight Change	Dilution Tunnel	Flue	Filter	Ambient
99	14.504	0.150	0.078	2.30	90	-2.4	101	40.8	-0.2	109	529	83	70
100	14.651	0.147	0.077	2.29	90	-1.27	100	40.6	-0.2	108	531	83	70
101	14.800	0.149	0.071	2.27	90	-0.78	105	40.4	-0.2	108	533	83	70
102	14.950	0.150	0.076	2.29	90	-2.53	102	40.2	-0.2	108	532	84	71
103	15.098	0.148	0.072	2.26	90	-1.43	104	39.9	-0.3	108	534	84	70
104	15.248	0.150	0.070	2.29	90	-1.61	107	39.8	-0.1	108	533	84	71
105	15.395	0.147	0.080	2.28	90	-0.14	98	39.6	-0.2	108	535	84	71
106	15.545	0.150	0.084	2.28	91	-2.71	97	39.4	-0.2	108	532	84	71
107	15.692	0.147	0.076	2.29	91	-2.45	100	39.2	-0.2	109	533	84	71
108	15.842	0.150	0.079	2.26	91	-0.54	100	39.0	-0.2	108	533	84	71
109	15.988	0.146	0.072	2.29	91	-2.36	102	38.8	-0.2	108	531	84	71
110	16.138	0.150	0.068	2.28	91	-0.15	108	38.6	-0.2	108	531	83	71
111	16.284	0.146	0.075	2.29	91	-1.14	100	38.3	-0.3	108	528	83	71
112	16.435	0.151	0.075	2.28	91	-0.09	103	38.2	-0.1	108	529	83	70
113	16.580	0.145	0.078	2.28	91	-2.82	97	38.0	-0.2	108	527	83	71
114	16.732	0.152	0.072	2.27	91	-2.61	106	37.8	-0.2	108	528	83	71
115	16.878	0.146	0.076	2.28	91	-1.08	99	37.6	-0.2	108	527	83	71
116	17.030	0.152	0.079	2.28	91	-0.06	101	37.4	-0.2	107	528	83	71
117	17.176	0.146	0.080	2.27	91	-1.44	97	37.1	-0.3	107	530	83	71
118	17.327	0.151	0.081	2.27	92	-2.75	99	37.0	-0.1	108	530	83	71
119	17.473	0.146	0.074	2.27	92	-2.84	101	36.8	-0.2	108	529	83	71
120	17.624	0.151	0.079	2.27	92	-0.23	101	36.5	-0.3	108	531	83	70
121	17.770	0.146	0.079	2.27	92	-0.23	97	36.4	-0.1	108	530	83	71
122	17.920	0.150	0.087	2.27	92	-1.14	95	36.2	-0.2	108	531	84	71
123	18.066	0.146	0.069	2.26	92	-0.68	104	36.0	-0.2	108	533	84	71
124	18.216	0.150	0.081	2.27	92	-2.45	99	35.8	-0.2	108	533	84	71
125	18.363	0.147	0.075	2.28	92	-1.34	101	35.6	-0.2	109	536	84	71
126	18.512	0.149	0.080	2.25	92	-1.4	99	35.4	-0.2	109	536	84	71
127	18.660	0.148	0.081	2.26	92	-1.79	97	35.1	-0.3	109	540	84	70
128	18.808	0.148	0.079	2.25	92	-1.69	99	34.9	-0.2	109	540	84	71
129	18.958	0.150	0.068	2.25	92	-0.51	108	34.7	-0.2	109	542	83	71
130	19.105	0.147	0.072	2.25	92	-0.12	103	34.5	-0.2	109	545	83	71
131	19.255	0.150	0.082	2.24	92	-1.47	98	34.3	-0.2	109	547	83	71

BOX A TEST DATA - ASTM E3053 / ASTM E2515

Client: FPI
Model: F5200
Run #: 1

Job #: 19-464
Tracking #: 0024
Technician: SJB
Date: 4/23/2019

	Particulate Sampling Data							Fuel Weight (lb)		Temperature Data (°F)			
Elapsed Time (min)	Gas Meter (ft^3)	Sample Rate (cfm)	Dilution Tunnel dP (in H_2O)	Orifice dH (in H_2O)	Meter Temp (°F)	Meter Vacuum (in Hg)	Pro. Rate (%)	Scale Reading	Weight Change	Dilution Tunnel	Flue	Filter	Ambient
132	19.402	0.147	0.082	2.26	93	-2.93	96	34.1	-0.2	109	547	83	71
133	19.552	0.150	0.071	2.26	93	-1.34	105	33.8	-0.3	109	549	83	71
134	19.698	0.146	0.082	2.25	93	-0.34	96	33.6	-0.2	110	553	83	72
135	19.848	0.150	0.075	2.25	93	-1.27	103	33.4	-0.2	110	556	83	71
136	19.994	0.146	0.079	2.27	93	-1.15	97	33.1	-0.3	111	556	83	71
137	20.144	0.150	0.082	2.25	93	-0.19	98	32.9	-0.2	111	557	83	72
138	20.289	0.145	0.081	2.25	93	-2.09	96	32.7	-0.2	111	558	83	72
139	20.440	0.151	0.073	2.27	93	-0.13	105	32.5	-0.2	111	558	83	71
140	20.585	0.145	0.074	2.26	93	-2.88	100	32.2	-0.3	111	559	83	72
141	20.736	0.151	0.073	2.25	93	-0.14	105	32.0	-0.2	111	559	83	71
142	20.881	0.145	0.076	2.24	93	-0.18	99	31.8	-0.2	111	559	84	72
143	21.033	0.152	0.081	2.23	93	-0.08	100	31.6	-0.2	110	558	84	72
144	21.178	0.145	0.072	2.24	93	-2.75	101	31.4	-0.2	110	558	84	71
145	21.329	0.151	0.077	2.26	93	-1.96	102	31.1	-0.3	110	556	84	71
146	21.474	0.145	0.077	2.24	93	-1.67	98	30.9	-0.2	110	556	84	71
147	21.625	0.151	0.073	2.24	93	-1.26	105	30.7	-0.2	110	554	83	72
148	21.771	0.146	0.073	2.24	93	-0.15	101	30.5	-0.2	110	554	83	71
149	21.921	0.150	0.070	2.25	93	-2.87	106	30.3	-0.2	111	554	83	72
150	22.067	0.146	0.071	2.24	93	-1.21	103	30.1	-0.2	110	556	83	72
151	22.217	0.150	0.079	2.23	93	-1.07	100	29.8	-0.3	110	555	83	72
152	22.363	0.146	0.078	2.24	94	-0.27	98	29.6	-0.2	110	556	83	72
153	22.512	0.149	0.073	2.24	94	-2.01	103	29.3	-0.3	111	556	83	72
154	22.658	0.146	0.076	2.25	94	-2.67	99	29.2	-0.1	111	557	83	72
155	22.807	0.149	0.071	2.24	94	-2.46	105	28.9	-0.3	111	556	83	71
156	22.953	0.146	0.076	2.22	94	-1.39	99	28.8	-0.1	111	557	83	72
157	23.103	0.150	0.074	2.24	94	-0.92	103	28.5	-0.3	110	556	83	72
158	23.249	0.146	0.086	2.23	94	-2.02	93	28.4	-0.1	110	556	83	72
159	23.398	0.149	0.078	2.22	94	-0.18	100	28.2	-0.2	110	556	83	72
160	23.545	0.147	0.078	2.24	94	-2.21	98	28.1	-0.1	110	556	83	72
161	23.693	0.148	0.079	2.23	94	-1.13	98	27.8	-0.3	110	555	84	73
162	23.840	0.147	0.078	2.23	94	-0.85	98	27.7	-0.1	110	555	84	72
163	23.988	0.148	0.077	2.25	94	-2.06	100	27.3	-0.4	110	553	84	72
164	24.137	0.149	0.077	2.24	94	-0.8	100	27.2	-0.1	110	554	84	73

BOX A TEST DATA - ASTM E3053 / ASTM E2515

Client: FPI
Model: F5200
Run #: 1

Job #: 19-464
Tracking #: 0024
Technician: SJB
Date: 4/23/2019

	Particulate Sampling Data							Fuel Weight (lb)		Temperature Data (°F)			
Elapsed Time (min)	Gas Meter (ft^3)	Sample Rate (cfm)	Dilution Tunnel dP (in H_2O)	Orifice dH (in H_2O)	Meter Temp (°F)	Meter Vacuum (in Hg)	Pro. Rate (%)	Scale Reading	Weight Change	Dilution Tunnel	Flue	Filter	Ambient
165	24.284	0.147	0.084	2.23	94	-1.92	95	27.0	-0.2	110	554	84	72
166	24.432	0.148	0.080	2.24	94	-0.12	98	26.9	-0.1	110	554	84	73
167	24.579	0.147	0.074	2.22	94	-2.56	101	26.7	-0.2	110	550	84	73
168	24.728	0.149	0.072	2.21	94	-1.59	104	26.4	-0.3	109	545	83	72
169	24.874	0.146	0.078	2.23	94	-1.82	98	26.3	-0.1	109	541	83	72
170	25.023	0.149	0.069	2.24	94	-0.55	106	26.1	-0.2	109	540	83	72
171	25.169	0.146	0.075	2.23	94	-2.9	100	26.0	-0.1	109	539	83	73
172	25.319	0.150	0.082	2.22	94	-1.36	98	25.8	-0.2	109	540	83	73
173	25.465	0.146	0.083	2.25	94	-0.19	95	25.5	-0.3	109	541	83	73
174	25.614	0.149	0.079	2.21	94	-2.67	99	25.4	-0.1	109	544	83	73
175	25.759	0.145	0.078	2.22	94	-0.12	97	25.2	-0.2	109	544	83	73
176	25.909	0.150	0.074	2.24	94	-0.67	103	24.9	-0.3	109	545	83	73
177	26.054	0.145	0.076	2.23	94	-1.92	98	24.9	0	108	545	83	73
178	26.204	0.150	0.070	2.23	94	-2.76	106	24.7	-0.2	108	544	83	73
179	26.348	0.144	0.078	2.20	94	-0.45	96	24.6	-0.1	108	540	83	73
180	26.499	0.151	0.079	2.23	94	-0.2	100	24.4	-0.2	108	537	83	73
181	26.644	0.145	0.082	2.23	94	-2.72	95	24.3	-0.1	108	534	83	73
182	26.794	0.150	0.074	2.22	95	-2.97	103	24.1	-0.2	108	532	84	73
183	26.938	0.144	0.069	2.22	95	-2.4	102	23.9	-0.2	107	528	84	73
184	27.089	0.151	0.078	2.23	95	-0.38	101	23.8	-0.1	107	524	84	73
185	27.233	0.144	0.077	2.23	95	-0.17	97	23.7	-0.1	107	522	84	72
186	27.384	0.151	0.074	2.22	95	-2.89	103	23.6	-0.1	107	520	84	73
187	27.529	0.145	0.073	2.21	95	-2.74	100	23.4	-0.2	106	517	84	73
188	27.680	0.151	0.079	2.22	95	-2.91	100	23.2	-0.2	106	512	84	73
189	27.825	0.145	0.070	2.22	95	-0.25	102	23.2	0	106	512	83	73
190	27.975	0.150	0.078	2.22	95	-2.74	100	23.1	-0.1	106	511	83	72
191	28.120	0.145	0.081	2.22	95	-0.35	95	22.9	-0.2	106	509	83	73
192	28.271	0.151	0.078	2.22	95	-0.14	100	22.8	-0.1	105	507	83	72
193	28.416	0.145	0.081	2.22	95	-3.02	95	22.7	-0.1	105	508	83	73
194	28.566	0.150	0.076	2.22	95	-1.25	101	22.6	-0.1	105	509	83	72
195	28.711	0.145	0.081	2.22	95	-0.19	95	22.5	-0.1	105	509	83	73
196	28.861	0.150	0.075	2.21	95	-2.19	102	22.4	-0.1	105	508	83	72
197	29.007	0.146	0.073	2.23	95	-0.62	100	22.2	-0.2	105	506	83	73

BOX A TEST DATA - ASTM E3053 / ASTM E2515

Client: FPI
Model: F5200
Run #: 1

Job #: 19-464
Tracking #: 0024
Technician: SJB
Date: 4/23/2019

	Particulate Sampling Data							Fuel Weight (lb)		Temperature Data (°F)			
Elapsed Time (min)	Gas Meter (ft^3)	Sample Rate (cfm)	Dilution Tunnel dP (in H_2O)	Orifice dH (in H_2O)	Meter Temp (°F)	Meter Vacuum (in Hg)	Pro. Rate (%)	Scale Reading	Weight Change	Dilution Tunnel	Flue	Filter	Ambient
198	29.156	0.149	0.073	2.21	95	-0.16	102	22.2	0	105	505	83	73
199	29.302	0.146	0.079	2.23	95	-2.95	96	22.1	-0.1	104	504	83	72
200	29.451	0.149	0.077	2.23	95	-0.33	100	22.0	-0.1	104	501	83	72
201	29.596	0.145	0.078	2.23	95	-2.48	96	21.8	-0.2	104	499	83	72
202	29.745	0.149	0.079	2.24	95	-0.41	98	21.7	-0.1	104	498	84	72
203	29.892	0.147	0.076	2.20	95	-2.91	99	21.6	-0.1	104	498	84	72
204	30.041	0.149	0.075	2.24	95	-1.35	101	21.5	-0.1	104	498	84	72
205	30.187	0.146	0.077	2.24	95	-2.94	98	21.3	-0.2	104	495	84	72
206	30.336	0.149	0.082	2.21	95	-2.73	97	21.2	-0.1	103	493	83	72
207	30.483	0.147	0.079	2.22	95	-0.8	97	21.1	-0.1	104	493	83	72
208	30.631	0.148	0.077	2.22	95	-2.57	99	20.9	-0.2	104	493	83	72
209	30.778	0.147	0.078	2.22	95	-2.17	98	20.8	-0.1	104	492	83	72
210	30.926	0.148	0.079	2.21	95	-2.95	98	20.7	-0.1	103	493	83	72
211	31.074	0.148	0.073	2.22	95	-2.97	102	20.6	-0.1	103	492	83	72
212	31.222	0.148	0.074	2.22	95	-0.21	101	20.5	-0.1	103	492	83	72
213	31.370	0.148	0.088	2.22	95	-0.13	93	20.4	-0.1	103	490	83	72
214	31.517	0.147	0.078	2.22	95	-0.6	98	20.3	-0.1	103	489	83	73
215	31.666	0.149	0.078	2.21	95	-0.15	99	20.2	-0.1	103	489	83	72
216	31.813	0.147	0.073	2.21	95	-2.36	101	20.0	-0.2	103	487	83	72
217	31.962	0.149	0.074	2.21	95	-0.23	102	19.9	-0.1	103	488	83	72
218	32.108	0.146	0.077	2.22	95	-1.88	98	19.8	-0.1	103	487	83	72
219	32.258	0.150	0.072	2.20	95	-1.31	104	19.7	-0.1	103	487	83	72
220	32.403	0.145	0.078	2.22	95	-2.92	96	19.6	-0.1	103	486	83	72
221	32.553	0.150	0.076	2.22	95	-0.17	101	19.5	-0.1	103	486	83	72
222	32.698	0.145	0.077	2.21	95	-0.17	97	19.5	0	102	486	83	72
223	32.848	0.150	0.078	2.22	95	-1.56	100	19.3	-0.2	102	487	83	73
224	32.993	0.145	0.076	2.22	95	-2.83	97	19.2	-0.1	102	487	83	73
225	33.142	0.149	0.083	2.21	95	-2.9	96	19.0	-0.2	102	488	83	73
226	33.287	0.145	0.077	2.19	95	-2.84	97	18.9	-0.1	103	488	83	73
227	33.438	0.151	0.076	2.23	95	-0.7	102	18.9	0	102	487	83	72
228	33.583	0.145	0.077	2.23	96	-0.29	97	18.7	-0.2	102	485	83	72
229	33.733	0.150	0.087	2.21	96	-0.76	94	18.6	-0.1	102	485	83	73
230	33.877	0.144	0.071	2.23	96	-0.14	100	18.5	-0.1	102	485	82	73

BOX A TEST DATA - ASTM E3053 / ASTM E2515

Client: FPI
Model: F5200
Run #: 1

Job #: 19-464
Tracking #: 0024
Technician: SJB
Date: 4/23/2019

	Particulate Sampling Data							Fuel Weight (lb)		Temperature Data (°F)			
Elapsed Time (min)	Gas Meter (ft^3)	Sample Rate (cfm)	Dilution Tunnel dP (in H_2O)	Orifice dH (in H_2O)	Meter Temp (°F)	Meter Vacuum (in Hg)	Pro. Rate (%)	Scale Reading	Weight Change	Dilution Tunnel	Flue	Filter	Ambient
231	34.028	0.151	0.072	2.21	96	-0.18	104	18.4	-0.1	102	486	82	73
232	34.173	0.145	0.075	2.22	96	-2.52	98	18.3	-0.1	102	485	82	72
233	34.323	0.150	0.077	2.20	96	-1.05	100	18.2	-0.1	103	486	83	72
234	34.468	0.145	0.078	2.21	96	-1.15	96	18.1	-0.1	103	487	83	73
235	34.619	0.151	0.077	2.22	96	-2.86	101	18.0	-0.1	103	487	83	73
236	34.764	0.145	0.080	2.21	96	-0.12	95	17.9	-0.1	103	488	83	72
237	34.914	0.150	0.078	2.20	96	-2.29	99	17.8	-0.1	103	489	84	72
238	35.059	0.145	0.076	2.21	96	-0.95	97	17.7	-0.1	103	490	84	72
239	35.209	0.150	0.080	2.21	96	-0.43	98	17.6	-0.1	103	491	84	72
240	35.354	0.145	0.068	2.21	96	-1.96	103	17.5	-0.1	103	493	84	72
241	35.504	0.150	0.073	2.21	96	-0.53	103	17.4	-0.1	103	495	84	72
242	35.649	0.145	0.069	2.21	96	-1.33	102	17.2	-0.2	103	497	84	72
243	35.799	0.150	0.078	2.21	96	-2.56	99	17.1	-0.1	103	498	84	73
244	35.944	0.145	0.078	2.20	96	-2.73	96	17.0	-0.1	103	499	84	72
245	36.094	0.150	0.081	2.20	96	-2.83	98	16.9	-0.1	103	500	84	72
246	36.239	0.145	0.076	2.20	96	-1.76	97	16.8	-0.1	103	501	83	72
247	36.388	0.149	0.082	2.20	96	-3.03	96	16.6	-0.2	104	502	83	72
248	36.535	0.147	0.072	2.29	96	-1.17	102	16.5	-0.1	104	504	83	72
249	36.685	0.150	0.080	2.27	96	-0.22	98	16.4	-0.1	104	504	83	73
250	36.834	0.149	0.078	2.30	96	-2.77	99	16.3	-0.1	104	505	83	73
251	36.984	0.150	0.077	2.27	96	-2.57	100	16.2	-0.1	104	506	83	73
252	37.135	0.151	0.078	2.29	96	-0.58	100	16.1	-0.1	104	509	83	73
253	37.284	0.149	0.075	2.28	96	-0.62	101	15.9	-0.2	104	510	83	73
254	37.435	0.151	0.078	2.29	96	-2.71	100	15.8	-0.1	104	508	83	73
255	37.583	0.148	0.070	2.28	96	-2.22	104	15.8	0	104	506	83	73
256	37.734	0.151	0.078	2.30	96	-2.97	100	15.7	-0.1	104	506	83	73
257	37.881	0.147	0.079	2.30	96	-2.8	97	15.6	-0.1	104	504	83	72
258	38.033	0.152	0.081	2.27	96	-2.96	99	15.5	-0.1	103	503	83	73
259	38.180	0.147	0.074	2.28	96	-0.72	100	15.3	-0.2	103	500	84	73
260	38.333	0.153	0.079	2.27	96	-2.76	101	15.3	0	103	498	84	73
261	38.480	0.147	0.077	2.27	96	-0.23	98	15.2	-0.1	104	495	83	73
262	38.633	0.153	0.074	2.28	96	-2.9	104	15.1	-0.1	103	493	83	73
263	38.780	0.147	0.076	2.29	96	-3	99	15.0	-0.1	103	492	83	73

BOX A TEST DATA - ASTM E3053 / ASTM E2515

Client: FPI
Model: F5200
Run #: 1

Job #: 19-464
Tracking #: 0024
Technician: SJB
Date: 4/23/2019

	Particulate Sampling Data							Fuel Weight (lb)		Temperature Data (°F)			
Elapsed Time (min)	Gas Meter (ft^3)	Sample Rate (cfm)	Dilution Tunnel dP (in H_2O)	Orifice dH (in H_2O)	Meter Temp (°F)	Meter Vacuum (in Hg)	Pro. Rate (%)	Scale Reading	Weight Change	Dilution Tunnel	Flue	Filter	Ambient
264	38.931	0.151	0.081	2.29	96	-1.23	98	14.9	-0.1	103	488	83	73
265	39.078	0.147	0.082	2.27	96	-0.24	95	14.8	-0.1	103	487	83	73
266	39.229	0.151	0.075	2.28	97	-2.14	102	14.7	-0.1	103	484	83	73
267	39.378	0.149	0.077	2.26	97	-1.77	99	14.6	-0.1	103	480	83	73
268	39.529	0.151	0.079	2.28	97	-0.33	99	14.5	-0.1	103	479	83	73
269	39.679	0.150	0.073	2.27	97	-2.99	103	14.4	-0.1	102	477	83	72
270	39.827	0.148	0.078	2.27	97	-2.42	98	14.4	0	102	474	83	73
271	39.979	0.152	0.077	2.27	97	-0.6	101	14.1	-0.3	102	469	83	72
272	40.126	0.147	0.084	2.29	97	-2.04	94	14.2	0.1	101	466	83	72
273	40.277	0.151	0.068	2.27	97	-2.33	107	14.1	-0.1	101	465	83	72
274	40.424	0.147	0.078	2.28	97	-2.23	97	14.0	-0.1	101	465	83	73
275	40.576	0.152	0.082	2.28	97	-1.27	98	13.9	-0.1	101	464	83	73
276	40.723	0.147	0.073	2.27	97	-0.29	100	13.7	-0.2	101	464	84	73
277	40.876	0.153	0.078	2.28	97	-2.18	101	13.7	0	102	467	84	73
278	41.023	0.147	0.077	2.26	97	-0.22	98	13.6	-0.1	102	465	84	73
279	41.175	0.152	0.074	2.24	97	-0.25	103	13.4	-0.2	101	464	84	73
280	41.322	0.147	0.081	2.25	97	-3.04	95	13.5	0.1	101	461	84	72
281	41.472	0.150	0.076	2.27	97	-1.03	100	13.4	-0.1	101	460	84	73
282	41.620	0.148	0.076	2.27	97	-0.23	99	13.3	-0.1	101	460	84	72
283	41.771	0.151	0.087	2.27	97	-0.23	94	13.2	-0.1	101	459	84	73
284	41.919	0.148	0.078	2.26	97	-2.21	98	13.1	-0.1	101	459	83	73
285	42.069	0.150	0.074	2.27	97	-0.55	102	13.0	-0.1	101	461	83	73
286	42.220	0.151	0.081	2.26	97	-1.75	98	12.9	-0.1	101	459	83	72
287	42.368	0.148	0.076	2.26	97	-1.2	99	12.9	0	101	459	83	73
288	42.520	0.152	0.072	2.25	97	-2.78	105	12.8	-0.1	101	461	83	73
289	42.666	0.146	0.078	2.27	97	-0.5	96	12.7	-0.1	101	461	83	72
290	42.817	0.151	0.071	2.27	97	-0.21	104	12.6	-0.1	100	463	83	73
291	42.964	0.147	0.073	2.27	97	-2.82	100	12.5	-0.1	101	465	83	73
292	43.116	0.152	0.079	2.29	97	-0.27	100	12.5	0	101	466	83	72
293	43.262	0.146	0.066	2.27	97	-1.77	105	12.3	-0.2	101	465	83	72
294	43.415	0.153	0.083	2.27	97	-2.65	98	12.3	0	101	467	83	73
295	43.561	0.146	0.074	2.27	97	-0.64	99	12.2	-0.1	101	465	83	73
296	43.713	0.152	0.076	2.27	97	-2.94	102	12.0	-0.2	101	465	84	73

BOX A TEST DATA - ASTM E3053 / ASTM E2515

Client: FPI
Model: F5200
Run #: 1

Job #: 19-464
Tracking #: 0024
Technician: SJB
Date: 4/23/2019

	Particulate Sampling Data							Fuel Weight (lb)		Temperature Data (°F)			
Elapsed Time (min)	Gas Meter (ft^3)	Sample Rate (cfm)	Dilution Tunnel dP (in H_2O)	Orifice dH (in H_2O)	Meter Temp (°F)	Meter Vacuum (in Hg)	Pro. Rate (%)	Scale Reading	Weight Change	Dilution Tunnel	Flue	Filter	Ambient
297	43.860	0.147	0.082	2.25	97	-2.61	95	12.0	0	101	462	84	73
298	44.011	0.151	0.076	2.26	97	-2.93	101	12.0	0	101	461	84	73
299	44.158	0.147	0.084	2.25	97	-0.46	93	11.8	-0.2	100	461	84	73
300	44.308	0.150	0.073	2.24	97	-0.89	102	11.8	0	101	461	84	73
301	44.456	0.148	0.073	2.25	97	-0.83	101	11.7	-0.1	100	460	84	73
302	44.605	0.149	0.074	2.25	97	-1.72	101	11.5	-0.2	100	460	84	73
303	44.754	0.149	0.082	2.22	97	-0.61	96	11.5	0	100	460	83	73
304	44.904	0.150	0.072	2.25	97	-0.85	103	11.5	0	100	459	83	73
305	45.053	0.149	0.081	2.23	97	-0.42	97	11.4	-0.1	100	459	83	73
306	45.201	0.148	0.074	2.24	97	-2.36	100	11.4	0	100	456	83	73
307	45.351	0.150	0.075	2.25	97	-2.64	101	11.3	-0.1	100	454	83	73
308	45.499	0.148	0.078	2.22	97	-1.13	98	11.2	-0.1	100	452	83	73
309	45.649	0.150	0.082	2.23	97	-2.98	97	11.1	-0.1	100	449	83	73
310	45.795	0.146	0.080	2.24	98	-0.42	95	11.1	0	99	447	83	73
311	45.945	0.150	0.075	2.23	98	-0.88	101	11.0	-0.1	99	444	82	73
312	46.091	0.146	0.076	2.24	98	-0.38	97	10.9	-0.1	99	444	83	73
313	46.242	0.151	0.078	2.24	98	-0.38	99	10.9	0	99	439	83	73
314	46.388	0.146	0.082	2.23	98	-2.03	94	10.7	-0.2	99	438	83	73
315	46.539	0.151	0.069	2.22	98	-2.9	106	10.7	0	99	436	83	73
316	46.685	0.146	0.072	2.21	98	-0.37	100	10.7	0	99	433	83	73
317	46.836	0.151	0.077	2.22	98	-2.28	100	10.6	-0.1	99	431	83	73
318	46.981	0.145	0.073	2.19	98	-1.79	99	10.6	0	98	429	83	73
319	47.132	0.151	0.082	2.21	98	-1.66	97	10.5	-0.1	98	427	83	73
320	47.277	0.145	0.073	2.20	98	-2.55	99	10.3	-0.2	98	424	83	73
321	47.427	0.150	0.077	2.19	98	-0.38	99	10.4	0.1	98	421	83	73
322	47.573	0.146	0.079	2.19	98	-1.46	95	10.2	-0.2	98	417	83	73
323	47.723	0.150	0.077	2.34	98	-0.47	99	10.1	-0.1	98	416	83	73
324	47.871	0.148	0.074	2.35	98	-2.68	100	10.2	0.1	97	413	83	73
325	48.024	0.153	0.080	2.31	98	-2.21	99	10.1	-0.1	97	411	83	73
326	48.174	0.150	0.075	2.32	98	-1.43	101	10.1	0	97	409	83	73
327	48.326	0.152	0.072	2.30	98	-3.07	104	9.9	-0.2	97	408	83	73
328	48.478	0.152	0.080	2.31	98	-3.06	99	10.0	0.1	97	406	82	73
329	48.627	0.149	0.080	2.29	98	-2.98	97	9.9	-0.1	97	404	82	73

BOX A TEST DATA - ASTM E3053 / ASTM E2515

Client: FPI
Model: F5200
Run #: 1

Job #: 19-464
Tracking #: 0024
Technician: SJB
Date: 4/23/2019

	Particulate Sampling Data							Fuel Weight (lb)		Temperature Data (°F)			
Elapsed Time (min)	Gas Meter (ft^3)	Sample Rate (cfm)	Dilution Tunnel dP (in H_2O)	Orifice dH (in H_2O)	Meter Temp (°F)	Meter Vacuum (in Hg)	Pro. Rate (%)	Scale Reading	Weight Change	Dilution Tunnel	Flue	Filter	Ambient
330	48.779	0.152	0.076	2.29	98	-1.41	101	9.7	-0.2	97	404	82	73
Avg/Tot	48.779	0.148	0.077	2.25	91	-1.42	100			105	502	83	70.8

BOX B TEST DATA - ASTM E3053 / ASTM E2515

Client: FPI
Model: F5200
Run #: 1

Job #: 19-464
Tracking #: 0024
Technician: SJB
Date: 4/23/2019

	Particulate Sampling Data							Flue Gas Data		
Elapsed Time (min)	Gas Meter (ft^3)	Sample Rate (cfm)	Orifice dH (in H_2O)	Meter Temp (°F)	Meter Vacuum (in Hg)	Pro. Rate (%)	Filter (°F)	Flue Draft (in H_2O)	CO_2 (%)	CO (%)
0	0.001		0.00	68	-1		82	0.000	0.00	0.00
1	0.102	0.101	2.24	68	-2.2	68	83	-0.070	0.79	0.06
2	0.242	0.140	2.06	68	-1.27	106	84	-0.060	5.44	0.10
3	0.390	0.148	2.21	68	-3.4	110	85	-0.090	13.48	0.82
4	0.533	0.143	2.21	68	-1.18	103	86	-0.050	17.10	2.64
5	0.677	0.144	2.21	68	-1.05	99	85	-0.060	15.05	0.01
6	0.820	0.143	2.21	68	-2.62	106	84	-0.060	10.88	0.01
7	0.963	0.143	2.21	68	-3.07	99	84	-0.070	9.38	0.05
8	1.108	0.145	2.18	69	-2.85	101	85	-0.070	9.25	0.05
9	1.251	0.143	2.19	69	-3.19	102	86	-0.080	4.58	0.04
10	1.396	0.145	2.18	69	-3.29	99	86	-0.060	12.33	0.03
11	1.537	0.141	2.19	69	-1.88	98	85	-0.060	11.72	0.03
12	1.682	0.145	2.19	69	-0.73	102	84	-0.060	11.91	0.08
13	1.822	0.140	2.16	70	-1.4	92	84	-0.050	12.06	0.00
14	1.967	0.145	2.19	70	-1.93	102	85	-0.070	11.68	0.06
15	2.107	0.140	2.19	70	-1.87	97	86	-0.060	12.35	0.03
16	2.250	0.143	2.18	70	-2.21	98	85	-0.070	12.43	0.01
17	2.392	0.142	2.18	71	-1.22	103	84	-0.060	12.39	0.05
18	2.532	0.140	2.17	71	-3.3	102	84	-0.060	11.18	0.05
19	2.677	0.145	2.19	71	-0.93	99	84	-0.070	12.69	0.03
20	2.816	0.139	2.18	72	-2.35	98	85	-0.060	11.72	0.05
21	2.964	0.148	2.25	72	-2.69	99	86	-0.050	9.17	0.02
22	3.105	0.141	2.26	72	-2.52	98	85	-0.060	5.51	0.05
23	3.252	0.147	2.23	73	-1.29	103	84	-0.070	10.75	0.05
24	3.394	0.142	2.22	73	-3.36	100	84	-0.070	11.78	0.07
25	3.540	0.146	2.24	73	-2.48	97	85	-0.070	11.14	0.05
26	3.682	0.142	2.23	74	-2.45	100	86	-0.070	10.96	0.05
27	3.829	0.147	2.23	74	-0.88	102	86	-0.070	11.12	0.01
28	3.969	0.140	2.20	74	-2.87	99	85	-0.090	6.17	0.08
29	4.114	0.145	2.19	74	-1.33	105	84	-0.070	15.42	0.06
30	4.257	0.143	2.13	75	-3.8	100	84	-0.070	15.59	0.07
31	4.405	0.148	2.42	75	-1.31	106	84	-0.090	17.80	2.98

BOX B TEST DATA - ASTM E3053 / ASTM E2515

Client: FPI
Model: F5200
Run #: 1

Job #: 19-464
Tracking #: 0024
Technician: SJB
Date: 4/23/2019

	Particulate Sampling Data							Flue Gas Data		
Elapsed Time (min)	Gas Meter (ft^3)	Sample Rate (cfm)	Orifice dH (in H_2O)	Meter Temp (°F)	Meter Vacuum (in Hg)	Pro. Rate (%)	Filter (°F)	Flue Draft (in H_2O)	CO_2 (%)	CO (%)
32	4.552	0.147	2.26	76	-0.1	103	83	-0.080	18.25	2.21
33	4.696	0.144	2.22	76	-0.64	97	84	-0.080	17.89	2.43
34	4.841	0.145	2.21	76	-2.14	103	87	-0.070	18.02	2.68
35	4.985	0.144	2.23	77	-2.15	102	87	-0.090	17.71	2.48
36	5.131	0.146	2.22	77	-2.56	108	86	-0.090	17.61	1.82
37	5.273	0.142	2.22	77	-0.58	99	84	-0.080	17.65	1.27
38	5.420	0.147	2.25	77	-2.8	103	84	-0.090	18.50	1.67
39	5.563	0.143	2.24	78	-2.71	101	85	-0.070	18.06	0.75
40	5.711	0.148	2.23	78	-0.81	103	86	-0.090	17.35	0.19
41	5.853	0.142	2.24	78	-2.58	99	86	-0.080	17.78	0.36
42	6.000	0.147	2.24	79	-3.12	103	85	-0.070	16.75	0.52
43	6.142	0.142	2.23	79	-0.84	100	84	-0.070	17.15	0.53
44	6.289	0.147	2.23	79	-1.02	104	84	-0.080	17.34	0.64
45	6.431	0.142	2.20	79	-2.26	101	85	-0.090	17.50	0.63
46	6.578	0.147	2.21	80	-2.48	98	86	-0.070	17.86	0.84
47	6.720	0.142	2.19	80	-2.4	93	86	-0.070	18.34	1.00
48	6.866	0.146	2.19	80	-1.86	101	84	-0.070	17.34	0.38
49	7.008	0.142	2.19	80	-2.73	98	84	-0.080	16.22	0.14
50	7.154	0.146	2.20	81	-1.74	106	85	-0.080	14.71	0.06
51	7.297	0.143	2.18	81	-1.24	104	86	-0.080	15.10	0.06
52	7.442	0.145	2.19	81	-3.17	99	86	-0.070	15.32	0.06
53	7.586	0.144	2.21	81	-2.45	103	85	-0.080	15.22	0.08
54	7.730	0.144	2.20	82	-3.23	98	84	-0.080	15.53	0.07
55	7.874	0.144	2.18	82	-1.21	99	85	-0.080	15.79	0.08
56	8.017	0.143	2.19	82	-0.79	99	86	-0.080	16.18	0.15
57	8.162	0.145	2.16	82	-2.12	107	86	-0.090	14.09	1.02
58	8.305	0.143	2.21	82	-3.17	97	86	-0.080	18.52	3.37
59	8.453	0.148	2.23	83	-3.34	105	84	-0.070	17.83	0.49
60	8.596	0.143	2.23	83	-2.39	99	85	-0.090	15.92	0.12
61	8.744	0.148	2.23	83	-0.88	103	86	-0.100	14.77	0.13
62	8.888	0.144	2.22	83	-3.37	107	86	-0.090	16.30	0.05
63	9.036	0.148	2.25	83	-2.24	101	86	-0.080	16.06	0.08

BOX B TEST DATA - ASTM E3053 / ASTM E2515

Client: FPI
Model: F5200
Run #: 1

Job #: 19-464
Tracking #: 0024
Technician: SJB
Date: 4/23/2019

	Particulate Sampling Data							Flue Gas Data		
Elapsed Time (min)	Gas Meter (ft^3)	Sample Rate (cfm)	Orifice dH (in H_2O)	Meter Temp (°F)	Meter Vacuum (in Hg)	Pro. Rate (%)	Filter (°F)	Flue Draft (in H_2O)	CO_2 (%)	CO (%)
64	9.178	0.142	2.21	84	-0.9	99	85	-0.080	16.79	0.52
65	9.326	0.148	2.23	84	-1.09	104	85	-0.080	15.83	0.31
66	9.469	0.143	2.22	84	-0.93	104	85	-0.080	15.55	0.35
67	9.617	0.148	2.22	84	-1.22	109	86	-0.080	15.45	0.30
68	9.759	0.142	2.22	84	-1.05	98	86	-0.090	15.34	0.26
69	9.907	0.148	2.21	84	-2.4	103	85	-0.090	15.17	0.21
70	10.050	0.143	2.21	85	-1	97	85	-0.090	15.01	0.19
71	10.198	0.148	2.21	85	-1.85	105	85	-0.090	15.15	0.19
72	10.340	0.142	2.20	85	-3.34	98	86	-0.090	15.00	0.18
73	10.488	0.148	2.22	85	-1.76	99	86	-0.080	14.98	0.15
74	10.631	0.143	2.21	85	-1.97	100	85	-0.090	14.95	0.14
75	10.780	0.149	2.19	85	-1.6	100	85	-0.080	15.11	0.11
76	10.923	0.143	2.21	86	-3.23	101	85	-0.090	14.97	0.11
77	11.070	0.147	2.21	86	-3.25	102	86	-0.080	14.81	0.06
78	11.213	0.143	2.21	86	-0.88	96	86	-0.090	14.78	0.08
79	11.361	0.148	2.21	86	-2.9	106	86	-0.090	15.11	0.07
80	11.505	0.144	2.21	86	-1.15	99	85	-0.080	14.90	0.06
81	11.652	0.147	2.20	86	-0.99	103	85	-0.080	15.08	0.06
82	11.796	0.144	2.22	86	-0.9	102	86	-0.090	15.06	0.06
83	11.943	0.147	2.19	86	-1.97	103	86	-0.080	14.93	0.08
84	12.087	0.144	2.20	87	-1.97	97	86	-0.090	14.82	0.04
85	12.233	0.146	2.21	87	-1.41	102	85	-0.100	14.44	0.08
86	12.378	0.145	2.21	87	-0.86	100	85	-0.080	14.42	0.05
87	12.523	0.145	2.20	87	-2.33	98	85	-0.090	14.48	0.05
88	12.668	0.145	2.19	87	-3.04	101	86	-0.080	14.67	0.04
89	12.813	0.145	2.20	87	-0.96	100	87	-0.100	14.34	0.09
90	12.959	0.146	2.20	87	-3.3	98	86	-0.080	14.17	0.07
91	13.103	0.144	2.19	87	-1.47	100	85	-0.090	14.28	0.08
92	13.249	0.146	2.20	88	-3.45	99	85	-0.080	14.23	0.06
93	13.394	0.145	2.21	88	-0.9	99	85	-0.090	14.18	0.05
94	13.541	0.147	2.20	88	-0.83	107	86	-0.070	14.66	0.08
95	13.684	0.143	2.19	88	-3.41	97	86	-0.080	14.91	0.08

BOX B TEST DATA - ASTM E3053 / ASTM E2515

Client: FPI
Model: F5200
Run #: 1

Job #: 19-464
Tracking #: 0024
Technician: SJB
Date: 4/23/2019

	Particulate Sampling Data							Flue Gas Data		
Elapsed Time (min)	Gas Meter (ft^3)	Sample Rate (cfm)	Orifice dH (in H_2O)	Meter Temp (°F)	Meter Vacuum (in Hg)	Pro. Rate (%)	Filter (°F)	Flue Draft (in H_2O)	CO_2 (%)	CO (%)
96	13.831	0.147	2.18	88	-3.13	95	85	-0.080	15.14	0.06
97	13.974	0.143	2.19	88	-3.38	96	85	-0.070	15.32	0.08
98	14.122	0.148	2.21	88	-1.75	100	85	-0.080	15.38	0.10
99	14.266	0.144	2.19	88	-1.67	98	86	-0.080	15.50	0.10
100	14.414	0.148	2.19	88	-1.09	101	87	-0.090	15.58	0.07
101	14.556	0.142	2.19	88	-3.13	101	86	-0.090	15.59	0.06
102	14.704	0.148	2.18	89	-2.97	102	85	-0.080	15.67	0.06
103	14.846	0.142	2.18	89	-1.1	100	85	-0.080	15.62	0.05
104	14.994	0.148	2.18	89	-1	106	86	-0.080	15.52	0.05
105	15.137	0.143	2.19	89	-0.97	96	86	-0.080	15.47	0.09
106	15.284	0.147	2.19	89	-1.3	96	86	-0.080	15.40	0.09
107	15.427	0.143	2.19	89	-3.09	99	85	-0.080	15.33	0.11
108	15.574	0.147	2.17	89	-2.97	99	85	-0.080	15.16	0.10
109	15.717	0.143	2.18	89	-2.99	101	85	-0.080	15.00	0.08
110	15.864	0.147	2.18	89	-3.24	107	86	-0.080	14.92	0.08
111	16.007	0.143	2.18	89	-1.74	99	86	-0.080	14.81	0.09
112	16.155	0.148	2.19	89	-3.3	103	85	-0.080	14.81	0.10
113	16.298	0.143	2.18	89	-2.61	97	85	-0.080	14.78	0.06
114	16.445	0.147	2.19	90	-2.33	104	85	-0.070	14.94	0.06
115	16.589	0.144	2.18	90	-1.03	99	86	-0.080	15.07	0.05
116	16.736	0.147	2.18	90	-2.01	99	87	-0.080	14.85	0.09
117	16.880	0.144	2.19	90	-1	96	86	-0.090	15.02	0.06
118	17.026	0.146	2.17	90	-3.44	97	85	-0.090	15.07	0.08
119	17.170	0.144	2.24	90	-0.99	100	85	-0.080	15.22	0.07
120	17.318	0.148	2.24	90	-2.71	100	86	-0.090	15.09	0.10
121	17.464	0.146	2.22	90	-1.06	98	86	-0.080	15.21	0.10
122	17.612	0.148	2.22	90	-1.1	95	86	-0.080	15.30	0.08
123	17.758	0.146	2.22	90	-2.68	105	85	-0.090	15.32	0.13
124	17.906	0.148	2.24	90	-1.28	99	85	-0.080	15.52	0.11
125	18.052	0.146	2.23	90	-1.61	101	86	-0.090	15.63	0.17
126	18.200	0.148	2.25	90	-1.24	99	86	-0.080	16.36	0.16
127	18.346	0.146	2.23	90	-1.21	97	86	-0.080	16.49	0.15

BOX B TEST DATA - ASTM E3053 / ASTM E2515

Client: FPI
Model: F5200
Run #: 1

Job #: 19-464
Tracking #: 0024
Technician: SJB
Date: 4/23/2019

	Particulate Sampling Data							Flue Gas Data		
Elapsed Time (min)	Gas Meter (ft^3)	Sample Rate (cfm)	Orifice dH (in H_2O)	Meter Temp (°F)	Meter Vacuum (in Hg)	Pro. Rate (%)	Filter (°F)	Flue Draft (in H_2O)	CO_2 (%)	CO (%)
128	18.494	0.148	2.24	91	-1.29	100	85	-0.080	16.55	0.21
129	18.639	0.145	2.24	91	-3.11	105	85	-0.080	16.68	0.18
130	18.787	0.148	2.22	91	-1.05	104	85	-0.080	16.88	0.19
131	18.933	0.146	2.22	91	-3.41	97	86	-0.090	16.83	0.21
132	19.081	0.148	2.22	91	-1.22	98	87	-0.090	16.92	0.16
133	19.226	0.145	2.22	91	-1.96	103	86	-0.070	17.09	0.21
134	19.374	0.148	2.22	91	-2.03	98	85	-0.080	17.01	0.46
135	19.519	0.145	2.21	91	-1.14	100	85	-0.070	16.90	1.14
136	19.667	0.148	2.22	91	-2.46	100	85	-0.080	16.90	1.35
137	19.813	0.146	2.23	91	-1.56	97	86	-0.090	17.63	0.87
138	19.961	0.148	2.22	91	-3.49	99	86	-0.090	17.26	0.92
139	20.106	0.145	2.21	91	-2.11	102	85	-0.090	16.96	0.92
140	20.254	0.148	2.22	91	-1.06	103	85	-0.080	17.03	0.80
141	20.399	0.145	2.22	91	-3.02	102	85	-0.080	17.01	0.62
142	20.547	0.148	2.21	91	-1.84	102	86	-0.060	16.93	0.75
143	20.693	0.146	2.21	91	-1.09	97	86	-0.080	16.83	0.87
144	20.841	0.148	2.21	91	-3.23	105	85	-0.080	16.86	0.91
145	20.986	0.145	2.22	91	-1.21	99	85	-0.080	16.72	0.98
146	21.134	0.148	2.21	91	-1.94	101	85	-0.090	16.49	1.25
147	21.279	0.145	2.21	92	-1.16	102	86	-0.090	16.72	1.24
148	21.427	0.148	2.22	92	-1.3	104	86	-0.080	16.76	1.25
149	21.572	0.145	2.21	92	-3.49	104	85	-0.080	17.02	0.86
150	21.720	0.148	2.22	92	-1.85	105	84	-0.080	16.96	0.74
151	21.865	0.145	2.22	92	-1.22	98	85	-0.090	16.62	0.65
152	22.013	0.148	2.20	92	-1.8	100	86	-0.080	16.66	0.64
153	22.158	0.145	2.20	92	-3.49	102	86	-0.080	16.73	0.65
154	22.306	0.148	2.21	92	-3.15	102	86	-0.080	16.71	0.75
155	22.452	0.146	2.21	92	-2.6	104	85	-0.090	16.68	0.68
156	22.599	0.147	2.21	92	-1.51	101	85	-0.080	16.66	0.65
157	22.745	0.146	2.21	92	-1.87	102	86	-0.080	16.82	0.55
158	22.892	0.147	2.22	92	-1.46	95	86	-0.070	16.68	0.62
159	23.037	0.145	2.21	92	-3.46	98	85	-0.090	16.78	0.52

BOX B TEST DATA - ASTM E3053 / ASTM E2515

Client: FPI
Model: F5200
Run #: 1

Job #: 19-464
Tracking #: 0024
Technician: SJB
Date: 4/23/2019

	Particulate Sampling Data							Flue Gas Data		
Elapsed Time (min)	Gas Meter (ft^3)	Sample Rate (cfm)	Orifice dH (in H_2O)	Meter Temp (°F)	Meter Vacuum (in Hg)	Pro. Rate (%)	Filter (°F)	Flue Draft (in H_2O)	CO_2 (%)	CO (%)
160	23.185	0.148	2.21	92	-1.54	100	84	-0.090	16.67	0.54
161	23.330	0.145	2.23	92	-2.5	98	85	-0.080	16.80	0.54
162	23.478	0.148	2.21	92	-2.63	100	86	-0.070	16.72	0.54
163	23.623	0.145	2.19	92	-1.35	99	86	-0.080	16.67	0.51
164	23.770	0.147	2.19	92	-2.92	100	86	-0.080	16.79	0.60
165	23.915	0.145	2.18	92	-2.5	95	85	-0.080	17.05	0.60
166	24.063	0.148	2.19	92	-3.08	99	85	-0.080	16.36	0.89
167	24.208	0.145	2.20	92	-1.06	101	86	-0.070	15.60	1.31
168	24.355	0.147	2.20	92	-2.12	104	86	-0.080	15.87	1.00
169	24.501	0.146	2.20	92	-1.94	99	86	-0.080	15.99	0.87
170	24.648	0.147	2.20	92	-2.47	106	85	-0.080	16.11	0.79
171	24.794	0.146	2.20	92	-1.13	101	84	-0.080	16.09	0.70
172	24.940	0.146	2.20	92	-1.51	96	85	-0.080	15.86	0.89
173	25.086	0.146	2.20	92	-2.49	96	86	-0.080	16.82	0.72
174	25.233	0.147	2.20	92	-3.28	99	87	-0.080	16.19	0.22
175	25.379	0.146	2.19	92	-1.21	99	86	-0.090	16.04	0.12
176	25.525	0.146	2.19	93	-1.48	101	85	-0.080	15.93	0.12
177	25.671	0.146	2.19	93	-3.29	100	85	-0.070	15.87	0.13
178	25.818	0.147	2.20	93	-1.54	105	86	-0.090	15.55	0.15
179	25.964	0.146	2.19	93	-3.45	99	87	-0.080	15.39	0.07
180	26.111	0.147	2.20	93	-3.01	99	86	-0.090	15.07	0.06
181	26.257	0.146	2.21	93	-1.25	96	85	-0.080	14.74	0.05
182	26.403	0.146	2.20	93	-3.24	101	85	-0.080	14.29	0.03
183	26.549	0.146	2.20	93	-3.38	105	85	-0.070	14.06	0.04
184	26.695	0.146	2.20	93	-1.03	98	86	-0.090	13.63	0.04
185	26.842	0.147	2.19	93	-2.79	100	86	-0.080	13.62	0.01
186	26.988	0.146	2.20	93	-1.36	101	86	-0.080	13.52	0.01
187	27.135	0.147	2.20	93	-1.01	102	85	-0.080	13.43	0.05
188	27.280	0.145	2.20	93	-1.2	97	85	-0.070	13.48	0.02
189	27.427	0.147	2.19	93	-1.21	105	86	-0.070	13.34	0.01
190	27.573	0.146	2.20	93	-3.43	98	86	-0.080	13.07	0.04
191	27.720	0.147	2.20	93	-2.3	97	86	-0.070	12.97	0.05

BOX B TEST DATA - ASTM E3053 / ASTM E2515

Client: FPI
Model: F5200
Run #: 1

Job #: 19-464
Tracking #: 0024
Technician: SJB
Date: 4/23/2019

	Particulate Sampling Data							Flue Gas Data		
Elapsed Time (min)	Gas Meter (ft^3)	Sample Rate (cfm)	Orifice dH (in H_2O)	Meter Temp (°F)	Meter Vacuum (in Hg)	Pro. Rate (%)	Filter (°F)	Flue Draft (in H_2O)	CO_2 (%)	CO (%)
192	27.866	0.146	2.19	93	-2.09	98	85	-0.070	12.96	0.06
193	28.013	0.147	2.20	93	-1.3	97	85	-0.080	12.36	0.08
194	28.159	0.146	2.20	93	-1.82	100	85	-0.080	11.77	0.09
195	28.306	0.147	2.20	93	-2.98	97	86	-0.090	11.68	0.08
196	28.451	0.145	2.20	93	-2.03	100	87	-0.070	11.32	0.11
197	28.598	0.147	2.20	93	-2.51	102	86	-0.080	11.26	0.12
198	28.743	0.145	2.20	93	-2.62	101	85	-0.090	11.38	0.11
199	28.891	0.148	2.19	93	-1.21	99	85	-0.080	11.55	0.10
200	29.036	0.145	2.19	93	-1.4	98	86	-0.080	11.69	0.11
201	29.184	0.148	2.19	93	-3.11	100	87	-0.070	11.98	0.08
202	29.329	0.145	2.19	93	-3.22	97	86	-0.080	11.99	0.06
203	29.477	0.148	2.20	93	-1.1	101	85	-0.080	12.26	0.07
204	29.622	0.145	2.19	93	-3.51	99	85	-0.070	12.71	0.04
205	29.769	0.147	2.20	93	-3.43	100	85	-0.080	13.11	0.02
206	29.915	0.146	2.19	93	-1.18	96	86	-0.080	13.46	0.04
207	30.062	0.147	2.19	93	-1.76	98	86	-0.060	13.58	0.04
208	30.208	0.146	2.20	93	-2.32	99	86	-0.080	13.21	0.04
209	30.355	0.147	2.20	93	-1.77	99	85	-0.070	13.14	0.04
210	30.501	0.146	2.20	93	-1.06	97	85	-0.070	13.06	0.07
211	30.649	0.148	2.20	93	-2.3	103	86	-0.080	12.82	0.02
212	30.794	0.145	2.21	93	-1.07	100	86	-0.080	12.47	0.06
213	30.942	0.148	2.20	93	-2.93	94	86	-0.080	12.32	0.07
214	31.087	0.145	2.21	93	-3.45	97	85	-0.080	12.34	0.05
215	31.235	0.148	2.20	93	-1.45	99	84	-0.070	12.43	0.04
216	31.380	0.145	2.20	93	-1.68	101	85	-0.080	12.43	0.03
217	31.528	0.148	2.20	93	-3.54	102	86	-0.080	12.29	0.05
218	31.674	0.146	2.20	93	-1.08	99	86	-0.070	12.23	0.04
219	31.821	0.147	2.19	93	-1.76	103	86	-0.080	12.15	0.07
220	31.967	0.146	2.20	93	-1.48	98	85	-0.080	12.07	0.07
221	32.115	0.148	2.20	93	-2.35	101	85	-0.080	12.19	0.04
222	32.260	0.145	2.20	93	-1.07	98	85	-0.070	12.04	0.06
223	32.408	0.148	2.21	94	-3.54	99	86	-0.070	12.02	0.05

BOX B TEST DATA - ASTM E3053 / ASTM E2515

Client: FPI
Model: F5200
Run #: 1

Job #: 19-464
Tracking #: 0024
Technician: SJB
Date: 4/23/2019

	Particulate Sampling Data							Flue Gas Data		
Elapsed Time (min)	Gas Meter (ft^3)	Sample Rate (cfm)	Orifice dH (in H_2O)	Meter Temp (°F)	Meter Vacuum (in Hg)	Pro. Rate (%)	Filter (°F)	Flue Draft (in H_2O)	CO_2 (%)	CO (%)
224	32.553	0.145	2.20	94	-0.99	98	86	-0.060	11.96	0.08
225	32.701	0.148	2.19	94	-2.83	96	85	-0.060	11.81	0.08
226	32.846	0.145	2.19	94	-3.43	98	84	-0.080	11.72	0.06
227	32.994	0.148	2.19	94	-3.38	100	85	-0.080	11.48	0.07
228	33.139	0.145	2.20	94	-3.33	98	86	-0.080	11.44	0.08
229	33.287	0.148	2.20	94	-1.83	94	86	-0.070	11.40	0.08
230	33.433	0.146	2.20	94	-2.3	103	86	-0.080	11.58	0.07
231	33.580	0.147	2.20	94	-3.15	103	84	-0.080	11.53	0.07
232	33.725	0.145	2.20	94	-2.66	99	85	-0.070	11.48	0.08
233	33.873	0.148	2.20	94	-1.12	100	86	-0.070	11.54	0.06
234	34.019	0.146	2.20	94	-1.44	98	86	-0.080	11.60	0.07
235	34.166	0.147	2.20	94	-3.44	99	86	-0.080	11.77	0.09
236	34.312	0.146	2.19	94	-2.37	97	85	-0.080	12.07	0.09
237	34.459	0.147	2.20	94	-2.42	99	85	-0.070	12.13	0.08
238	34.605	0.146	2.20	94	-2.02	99	85	-0.080	12.28	0.08
239	34.753	0.148	2.19	94	-3.39	98	86	-0.060	12.38	0.08
240	34.898	0.145	2.20	94	-2.91	104	86	-0.070	12.56	0.11
241	35.046	0.148	2.20	94	-1.38	103	86	-0.070	12.64	0.10
242	35.191	0.145	2.19	94	-3.35	103	85	-0.080	12.80	0.13
243	35.339	0.148	2.20	94	-1.12	99	85	-0.070	12.90	0.10
244	35.484	0.145	2.20	94	-3.32	97	86	-0.080	12.99	0.12
245	35.632	0.148	2.20	94	-1.21	97	86	-0.070	13.25	0.08
246	35.777	0.145	2.20	94	-3.49	99	86	-0.080	13.04	0.09
247	35.925	0.148	2.19	94	-3.32	97	85	-0.080	12.96	0.11
248	36.070	0.145	2.20	94	-2.37	101	85	-0.090	13.04	0.09
249	36.217	0.147	2.20	94	-2.28	97	85	-0.090	13.01	0.14
250	36.362	0.145	2.19	94	-2.95	97	86	-0.080	13.17	0.09
251	36.510	0.148	2.17	94	-2.01	100	86	-0.080	13.15	0.12
252	36.655	0.145	2.19	94	-3.25	97	85	-0.080	12.79	0.14
253	36.803	0.148	2.18	94	-1.14	101	84	-0.080	13.07	0.12
254	36.948	0.145	2.19	94	-1.14	97	85	-0.090	12.99	0.12
255	37.096	0.148	2.20	94	-3.53	105	86	-0.070	12.91	0.09

BOX B TEST DATA - ASTM E3053 / ASTM E2515

Client: FPI
Model: F5200
Run #: 1

Job #: 19-464
Tracking #: 0024
Technician: SJB
Date: 4/23/2019

	Particulate Sampling Data							Flue Gas Data		
Elapsed Time (min)	Gas Meter (ft^3)	Sample Rate (cfm)	Orifice dH (in H_2O)	Meter Temp (°F)	Meter Vacuum (in Hg)	Pro. Rate (%)	Filter (°F)	Flue Draft (in H_2O)	CO_2 (%)	CO (%)
256	37.241	0.145	2.19	94	-3.55	97	86	-0.080	12.79	0.11
257	37.389	0.148	2.19	94	-1.21	99	86	-0.060	12.66	0.08
258	37.533	0.144	2.18	95	-1.23	95	85	-0.060	12.60	0.08
259	37.681	0.148	2.18	95	-1.55	102	84	-0.070	12.10	0.07
260	37.826	0.145	2.17	95	-2.2	96	85	-0.070	12.02	0.07
261	37.974	0.148	2.18	95	-3.42	100	86	-0.080	12.06	0.09
262	38.118	0.144	2.19	95	-3.53	99	87	-0.080	12.15	0.08
263	38.266	0.148	2.19	95	-2.45	100	86	-0.080	12.21	0.07
264	38.411	0.145	2.19	95	-2.63	95	85	-0.070	12.28	0.04
265	38.559	0.148	2.19	95	-1.61	97	84	-0.070	12.17	0.04
266	38.704	0.145	2.20	95	-1.58	99	85	-0.090	11.98	0.08
267	38.852	0.148	2.19	95	-1.75	100	86	-0.080	11.94	0.05
268	38.996	0.144	2.19	95	-1.25	96	86	-0.070	11.76	0.06
269	39.145	0.149	2.19	95	-2.6	103	85	-0.080	11.76	0.01
270	39.289	0.144	2.18	95	-1.97	96	84	-0.070	11.32	0.02
271	39.438	0.149	2.18	95	-1.36	100	84	-0.070	11.00	0.00
272	39.582	0.144	2.17	95	-2.13	93	85	-0.060	11.05	0.02
273	39.730	0.148	2.18	95	-3.57	106	86	-0.080	10.86	0.03
274	39.874	0.144	2.18	95	-3.16	96	86	-0.070	10.82	0.04
275	40.023	0.149	2.18	95	-1.15	97	85	-0.070	11.00	0.04
276	40.167	0.144	2.19	95	-1.48	99	84	-0.080	11.14	0.03
277	40.316	0.149	2.19	95	-3.02	100	84	-0.060	11.31	0.03
278	40.462	0.146	2.31	95	-1.81	98	85	-0.080	11.22	0.04
279	40.613	0.151	2.29	95	-1.45	104	86	-0.080	11.11	0.02
280	40.762	0.149	2.32	95	-1.89	98	86	-0.080	11.01	0.05
281	40.913	0.151	2.30	95	-1.69	102	85	-0.070	11.12	0.08
282	41.064	0.151	2.30	95	-1.19	102	84	-0.070	11.02	0.05
283	41.214	0.150	2.30	95	-1.29	95	85	-0.060	10.96	0.03
284	41.366	0.152	2.33	95	-1.14	102	86	-0.080	10.99	0.04
285	41.514	0.148	2.30	95	-3	102	86	-0.080	10.92	0.02
286	41.665	0.151	2.31	95	-1.22	99	86	-0.070	10.91	0.06
287	41.813	0.148	2.32	95	-2.58	100	85	-0.080	10.98	0.04

BOX B TEST DATA - ASTM E3053 / ASTM E2515

Client: FPI
Model: F5200
Run #: 1

Job #: 19-464
Tracking #: 0024
Technician: SJB
Date: 4/23/2019

	Particulate Sampling Data							Flue Gas Data		
Elapsed Time (min)	Gas Meter (ft^3)	Sample Rate (cfm)	Orifice dH (in H_2O)	Meter Temp (°F)	Meter Vacuum (in Hg)	Pro. Rate (%)	Filter (°F)	Flue Draft (in H_2O)	CO_2 (%)	CO (%)
288	41.966	0.153	2.31	95	-1.79	106	84	-0.070	10.95	0.03
289	42.115	0.149	2.30	96	-2.31	99	85	-0.060	11.02	0.03
290	42.267	0.152	2.30	96	-2.67	106	86	-0.060	10.91	0.05
291	42.415	0.148	2.30	96	-3.59	102	86	-0.070	11.08	0.04
292	42.567	0.152	2.30	96	-1.65	101	85	-0.060	11.11	0.06
293	42.715	0.148	2.31	96	-2.91	107	84	-0.070	10.84	0.06
294	42.866	0.151	2.30	96	-2.63	98	84	-0.070	10.85	0.06
295	43.016	0.150	2.31	96	-1.64	103	85	-0.090	10.81	0.05
296	43.167	0.151	2.30	96	-2.04	102	86	-0.080	10.68	0.06
297	43.317	0.150	2.29	96	-1.35	98	86	-0.060	10.75	0.05
298	43.467	0.150	2.30	96	-2.55	101	85	-0.070	10.69	0.08
299	43.617	0.150	2.31	96	-1.44	96	84	-0.080	10.57	0.06
300	43.766	0.149	2.30	96	-3.57	103	85	-0.060	10.79	0.04
301	43.917	0.151	2.30	96	-2.68	104	86	-0.080	10.61	0.05
302	44.065	0.148	2.28	96	-3.58	101	86	-0.070	10.47	0.01
303	44.218	0.153	2.28	96	-1.84	99	86	-0.070	10.55	0.01
304	44.365	0.147	2.29	96	-1.33	102	85	-0.070	10.43	0.08
305	44.519	0.154	2.29	96	-3.54	101	84	-0.080	10.48	0.04
306	44.665	0.146	2.30	96	-1.19	100	85	-0.070	10.27	0.03
307	44.817	0.152	2.28	96	-3.63	103	86	-0.070	10.21	0.04
308	44.965	0.148	2.29	96	-2.3	99	86	-0.070	10.22	0.02
309	45.116	0.151	2.28	96	-1.81	98	86	-0.060	10.06	0.03
310	45.266	0.150	2.28	96	-3.62	99	85	-0.070	9.97	0.06
311	45.416	0.150	2.28	96	-2.96	102	84	-0.070	9.95	0.03
312	45.566	0.150	2.28	96	-3.14	101	85	-0.070	9.85	0.03
313	45.715	0.149	2.29	96	-3.06	99	86	-0.050	9.74	0.02
314	45.865	0.150	2.28	96	-3.42	97	86	-0.070	9.57	0.04
315	46.013	0.148	2.28	96	-3.39	105	85	-0.070	9.72	0.03
316	46.164	0.151	2.28	96	-1.3	105	84	-0.070	9.60	0.00
317	46.311	0.147	2.27	96	-3.61	99	85	-0.070	9.33	0.02
318	46.463	0.152	2.28	96	-1.22	105	86	-0.060	9.44	0.00
319	46.610	0.147	2.26	96	-1.31	95	86	-0.070	9.38	0.03

BOX B TEST DATA - ASTM E3053 / ASTM E2515

Client: FPI
Model: F5200
Run #: 1

Job #: 19-464
Tracking #: 0024
Technician: SJB
Date: 4/23/2019

	Particulate Sampling Data							Flue Gas Data		
Elapsed Time (min)	Gas Meter (ft^3)	Sample Rate (cfm)	Orifice dH (in H_2O)	Meter Temp (°F)	Meter Vacuum (in Hg)	Pro. Rate (%)	Filter (°F)	Flue Draft (in H_2O)	CO_2 (%)	CO (%)
320	46.762	0.152	2.27	96	-1.27	105	86	-0.060	9.44	0.00
321	46.909	0.147	2.25	96	-2.35	98	85	-0.070	9.36	0.03
322	47.061	0.152	2.26	96	-3.33	100	84	-0.060	9.46	0.00
323	47.207	0.146	2.26	96	-3.64	98	85	-0.070	9.45	0.01
324	47.357	0.150	2.25	96	-3.32	102	86	-0.060	9.45	0.02
325	47.504	0.147	2.26	96	-2.3	96	86	-0.060	9.40	0.02
326	47.654	0.150	2.25	96	-1.34	102	86	-0.070	9.48	0.01
327	47.802	0.148	2.24	96	-1.4	102	85	-0.060	9.59	0.00
328	47.951	0.149	2.23	96	-1.47	98	84	-0.060	9.54	0.03
329	48.100	0.149	2.24	96	-1.69	98	85	-0.060	9.63	0.00
330	48.249	0.149	2.23	96	-2.48	100	86	-0.050	9.51	0.03
Avg/Tot	48.249	0.146	2.21	89	-2.14	100	85	-0.076	13.51	0.25

WOODSTOVE SURFACE TEMPERATURE DATA

Client: FPI
Model: F5200
Run #: 1

Job #: 19-464
Tracking #: 0024
Technician: SJB
Date: 4/23/2019

	Temperature Data (°F)						
Elapsed Time (min)	FB Left	FB Right	FB Back	FB Top	FB Bottom	Stove Surface Average	Catalyst Exit
0	67	66	67	67	66	66.6	67
1	73	72	69	71	66	70.2	89
2	110	135	95	101	66	101.4	221
3	152	149	126	136	66	125.8	695
4	153	153	144	171	67	137.6	821
5	156	157	151	205	67	147.2	887
6	160	159	156	239	68	156.4	908
7	170	165	163	267	69	166.8	893
8	180	172	171	287	71	176.2	851
9	184	178	176	302	73	182.6	759
10	184	181	179	311	75	186.0	739
11	187	183	182	320	78	190.0	759
12	192	186	185	332	81	195.2	796
13	196	189	189	345	84	200.6	829
14	202	192	193	359	87	206.6	854
15	208	196	198	372	91	213.0	871
16	215	201	203	384	94	219.4	885
17	221	205	208	398	97	225.8	893
18	231	213	214	410	101	233.8	894
19	242	222	223	420	104	242.2	888
20	250	230	231	428	107	249.2	875
21	257	235	236	435	111	254.8	861
22	272	243	241	439	114	261.8	808
23	280	253	249	439	118	267.8	802
24	290	263	259	439	121	274.4	808
25	298	271	269	438	124	280.0	806
26	307	280	277	436	128	285.6	796
27	315	289	286	432	131	290.6	782
28	322	291	292	433	135	294.6	755
29	321	292	295	433	139	296.0	806
30	326	294	299	443	142	300.8	898
31	328	296	302	458	146	306.0	987
32	333	299	304	478	150	312.8	1057
33	339	303	307	499	153	320.2	1101
34	345	307	312	519	156	327.8	1122
35	349	311	316	537	160	334.6	1135
36	353	315	320	554	163	341.0	1143
37	357	318	324	569	166	346.8	1146
38	362	324	327	583	169	353.0	1150
39	366	328	331	596	172	358.6	1151
40	370	332	334	606	175	363.4	1147
41	376	337	339	617	178	369.4	1140
42	382	343	344	626	180	375.0	1130
43	389	348	350	635	183	381.0	1120
44	396	355	355	642	186	386.8	1117
45	404	361	360	649	188	392.4	1121
46	412	367	366	656	191	398.4	1133
47	418	373	371	662	193	403.4	1145

WOODSTOVE SURFACE TEMPERATURE DATA

Client: FPI
Model: F5200
Run #: 1

Job #: 19-464
Tracking #: 0024
Technician: SJB
Date: 4/23/2019

	Temperature Data (°F)						
Elapsed Time (min)	FB Left	FB Right	FB Back	FB Top	FB Bottom	Stove Surface Average	Catalyst Exit
48	425	379	377	666	195	408.4	1149
49	435	385	383	671	197	414.2	1142
50	446	393	390	675	200	420.8	1126
51	463	401	398	676	202	428.0	1105
52	480	407	407	676	204	434.8	1091
53	494	413	415	677	206	441.0	1090
54	508	418	424	679	208	447.4	1098
55	518	424	433	680	210	453.0	1103
56	535	441	446	683	212	463.4	1124
57	533	452	463	687	215	470.0	1171
58	509	447	457	686	217	463.2	1174
59	490	445	447	687	219	457.6	1202
60	475	442	437	693	221	453.6	1211
61	462	437	428	700	224	450.2	1188
62	454	432	422	704	226	447.6	1157
63	446	426	416	706	228	444.4	1154
64	439	421	412	706	230	441.6	1172
65	434	417	408	707	232	439.6	1193
66	430	413	404	707	234	437.6	1204
67	427	408	401	708	236	436.0	1208
68	424	405	398	707	238	434.4	1209
69	423	401	396	706	240	433.2	1208
70	421	399	393	705	241	431.8	1206
71	421	396	391	704	243	431.0	1204
72	421	393	390	702	244	430.0	1201
73	421	391	388	701	245	429.2	1198
74	421	390	387	699	246	428.6	1195
75	421	388	385	698	247	427.8	1193
76	422	387	384	696	248	427.4	1189
77	422	385	378	677	249	422.2	1184
78	423	384	369	662	249	417.4	1178
79	424	383	364	651	250	414.4	1173
80	424	382	360	640	250	411.2	1168
81	426	381	356	631	251	409.0	1164
82	427	380	353	624	251	407.0	1160
83	428	380	351	617	251	405.4	1157
84	429	379	349	613	251	404.2	1153
85	430	378	346	606	252	402.4	1146
86	431	377	344	601	252	401.0	1138
87	433	377	343	595	252	400.0	1133
88	434	377	341	593	252	399.4	1130
89	436	376	340	590	251	398.6	1130
90	438	376	339	587	251	398.2	1128
91	441	376	339	583	251	398.0	1122
92	444	376	339	580	251	398.0	1114
93	448	376	339	577	251	398.2	1107
94	452	376	340	573	251	398.4	1105
95	456	377	340	571	251	399.0	1108

WOODSTOVE SURFACE TEMPERATURE DATA

Client: FPI
Model: F5200
Run #: 1

Job #: 19-464
Tracking #: 0024
Technician: SJB
Date: 4/23/2019

	Temperature Data (°F)						
Elapsed Time (min)	FB Left	FB Right	FB Back	FB Top	FB Bottom	Stove Surface Average	Catalyst Exit
96	460	377	341	570	250	399.6	1115
97	463	378	342	571	250	400.8	1123
98	467	378	343	570	250	401.6	1131
99	471	379	345	570	249	402.8	1137
100	474	380	346	571	249	404.0	1142
101	477	380	347	572	249	405.0	1145
102	480	381	348	572	248	405.8	1147
103	483	382	350	572	248	407.0	1148
104	485	382	351	572	248	407.6	1147
105	486	383	352	573	247	408.2	1144
106	488	383	353	572	247	408.6	1142
107	490	383	354	572	246	409.0	1142
108	491	384	355	571	246	409.4	1141
109	492	385	356	571	246	410.0	1135
110	493	385	357	569	245	409.8	1129
111	494	385	358	567	245	409.8	1124
112	495	386	358	565	245	409.8	1121
113	495	386	359	563	244	409.4	1117
114	496	386	360	560	244	409.2	1115
115	497	387	361	560	244	409.8	1115
116	497	387	361	557	243	409.0	1117
117	497	386	361	557	243	408.8	1119
118	496	387	361	555	243	408.4	1125
119	495	387	361	556	242	408.2	1134
120	494	387	360	556	242	407.8	1141
121	493	387	360	557	242	407.8	1146
122	491	387	360	558	242	407.6	1149
123	490	387	359	560	242	407.6	1153
124	488	387	358	561	241	407.0	1158
125	487	387	357	564	241	407.2	1165
126	486	388	357	567	241	407.8	1173
127	485	388	357	570	241	408.2	1180
128	484	389	356	573	241	408.6	1185
129	485	389	356	577	241	409.6	1190
130	484	390	357	581	241	410.6	1194
131	484	390	356	585	240	411.0	1198
132	483	391	355	589	240	411.6	1201
133	481	392	354	592	240	411.8	1205
134	479	393	353	595	240	412.0	1210
135	479	394	351	600	240	412.8	1212
136	481	396	351	604	240	414.4	1212
137	482	397	351	608	240	415.6	1207
138	482	399	350	611	241	416.6	1205
139	481	401	350	613	241	417.2	1206
140	480	403	350	616	241	418.0	1206
141	479	404	350	619	241	418.6	1206
142	478	407	349	621	241	419.2	1208
143	477	409	349	623	241	419.8	1206

WOODSTOVE SURFACE TEMPERATURE DATA

Client: FPI
Model: F5200
Run #: 1

Job #: 19-464
Tracking #: 0024
Technician: SJB
Date: 4/23/2019

	Temperature Data (°F)						
Elapsed Time (min)	FB Left	FB Right	FB Back	FB Top	FB Bottom	Stove Surface Average	Catalyst Exit
144	476	411	349	624	241	420.2	1205
145	475	413	350	626	241	421.0	1202
146	475	416	351	627	242	422.2	1201
147	475	418	351	629	242	423.0	1200
148	474	420	352	629	242	423.4	1199
149	472	423	353	628	243	423.8	1199
150	470	426	354	628	243	424.2	1199
151	469	428	355	629	243	424.8	1201
152	467	430	356	629	244	425.2	1202
153	466	432	357	630	244	425.8	1202
154	465	434	358	632	244	426.6	1202
155	465	437	360	632	245	427.8	1201
156	464	439	362	633	245	428.6	1202
157	464	441	363	634	246	429.6	1202
158	464	443	365	633	247	430.4	1203
159	464	445	367	634	247	431.4	1202
160	464	447	369	633	248	432.2	1202
161	464	448	371	632	249	432.8	1200
162	465	450	373	633	249	434.0	1200
163	465	452	375	634	250	435.2	1199
164	466	454	377	634	251	436.4	1199
165	467	455	380	634	252	437.6	1198
166	470	457	382	634	253	439.2	1195
167	472	458	382	635	253	440.0	1183
168	473	459	383	636	254	441.0	1169
169	473	459	385	633	255	441.0	1162
170	474	459	387	633	256	441.8	1163
171	475	460	389	632	257	442.6	1166
172	475	461	390	630	258	442.8	1171
173	475	463	392	630	259	443.8	1177
174	475	464	392	631	260	444.4	1186
175	474	465	392	631	261	444.6	1192
176	474	466	391	631	262	444.8	1195
177	474	466	390	633	263	445.2	1196
178	473	466	389	632	264	444.8	1194
179	473	466	388	631	265	444.6	1191
180	472	466	387	630	266	444.2	1185
181	472	466	387	628	267	444.0	1173
182	471	466	387	623	268	443.0	1159
183	470	465	387	618	269	441.8	1145
184	469	464	386	615	270	440.8	1131
185	468	464	386	611	271	440.0	1120
186	467	463	386	605	272	438.6	1111
187	466	462	385	602	272	437.4	1105
188	465	461	384	598	273	436.2	1101
189	464	460	384	593	274	435.0	1098
190	462	458	383	591	274	433.6	1096
191	461	457	382	587	275	432.4	1093

WOODSTOVE SURFACE TEMPERATURE DATA

Client: FPI
Model: F5200
Run #: 1

Job #: 19-464
Tracking #: 0024
Technician: SJB
Date: 4/23/2019

	Temperature Data (°F)						
Elapsed Time (min)	FB Left	FB Right	FB Back	FB Top	FB Bottom	Stove Surface Average	Catalyst Exit
192	459	456	381	585	276	431.4	1091
193	458	455	380	583	276	430.4	1095
194	457	454	379	582	277	429.8	1106
195	455	454	378	582	277	429.2	1111
196	454	453	377	580	278	428.4	1110
197	452	452	377	575	279	427.0	1105
198	451	452	377	570	279	425.8	1094
199	450	450	377	565	280	424.4	1082
200	449	449	377	561	280	423.2	1072
201	448	448	378	556	281	422.2	1063
202	447	448	379	552	281	421.4	1057
203	447	447	380	547	282	420.6	1054
204	447	447	381	544	283	420.4	1049
205	447	447	382	541	283	420.0	1044
206	448	448	383	539	284	420.4	1041
207	449	448	385	537	284	420.6	1044
208	450	448	386	537	285	421.2	1050
209	450	448	387	537	285	421.4	1052
210	450	448	387	537	286	421.6	1051
211	451	448	388	537	287	422.2	1050
212	451	448	389	537	287	422.4	1046
213	451	447	389	536	288	422.2	1041
214	451	447	390	536	289	422.6	1037
215	451	446	390	535	289	422.2	1034
216	451	446	391	534	290	422.4	1032
217	451	446	391	533	291	422.4	1032
218	452	446	392	533	291	422.8	1032
219	452	446	393	530	292	422.6	1032
220	452	445	393	529	293	422.4	1032
221	452	445	394	528	293	422.4	1033
222	453	445	394	526	294	422.4	1034
223	453	444	395	525	295	422.4	1036
224	453	444	396	523	295	422.2	1037
225	453	443	396	522	296	422.0	1038
226	454	443	397	522	297	422.6	1035
227	454	443	398	521	297	422.6	1031
228	454	443	398	518	298	422.2	1028
229	455	443	399	515	299	422.2	1028
230	456	443	400	513	299	422.2	1033
231	457	443	401	511	300	422.4	1040
232	457	442	401	509	300	421.8	1047
233	457	442	402	508	301	422.0	1051
234	457	442	402	506	302	421.8	1055
235	457	442	403	505	302	421.8	1061
236	458	442	405	505	303	422.6	1066
237	458	442	406	504	303	422.6	1072
238	458	442	408	505	304	423.4	1080
239	459	443	409	505	304	424.0	1087

WOODSTOVE SURFACE TEMPERATURE DATA

Client: FPI
Model: F5200
Run #: 1

Job #: 19-464
Tracking #: 0024
Technician: SJB
Date: 4/23/2019

	Temperature Data (°F)						
Elapsed Time (min)	FB Left	FB Right	FB Back	FB Top	FB Bottom	Stove Surface Average	Catalyst Exit
240	460	443	411	505	305	424.8	1097
241	461	443	413	506	305	425.6	1106
242	462	444	415	508	306	427.0	1114
243	463	445	416	509	307	428.0	1123
244	464	446	418	511	307	429.2	1130
245	465	447	420	514	308	430.8	1132
246	466	448	421	515	308	431.6	1136
247	468	449	422	518	309	433.2	1140
248	469	450	423	519	309	434.0	1146
249	470	451	424	522	310	435.4	1150
250	472	453	426	524	310	437.0	1154
251	473	454	427	525	310	437.8	1155
252	474	455	428	527	311	439.0	1155
253	475	456	428	528	311	439.6	1152
254	478	456	429	529	312	440.8	1146
255	480	457	430	530	312	441.8	1139
256	481	458	432	529	313	442.6	1130
257	483	458	433	529	313	443.2	1121
258	483	458	434	528	314	443.4	1111
259	484	458	434	527	314	443.4	1100
260	485	458	434	524	315	443.2	1087
261	486	458	435	522	315	443.2	1073
262	487	459	436	521	316	443.8	1059
263	489	459	437	517	316	443.6	1048
264	491	459	438	514	317	443.8	1038
265	493	460	440	511	317	444.2	1029
266	494	461	441	508	318	444.4	1020
267	496	461	441	504	319	444.2	1011
268	497	461	442	502	320	444.4	1003
269	499	461	443	499	320	444.4	990
270	499	462	445	495	321	444.4	972
271	498	462	446	491	322	443.8	955
272	497	462	446	487	323	443.0	946
273	495	461	446	483	323	441.6	944
274	493	462	444	479	324	440.4	945
275	491	463	442	477	325	439.6	950
276	489	464	441	474	326	438.8	955
277	487	468	440	473	327	439.0	957
278	485	471	439	471	327	438.6	952
279	484	473	439	470	328	438.8	946
280	481	476	438	469	329	438.6	942
281	479	478	436	468	330	438.2	941
282	477	479	434	467	330	437.4	943
283	475	480	431	466	331	436.6	946
284	473	481	429	464	332	435.8	950
285	471	480	426	464	332	434.6	954
286	469	480	424	464	333	434.0	956
287	468	480	422	464	334	433.6	957

WOODSTOVE SURFACE TEMPERATURE DATA

Client: FPI
Model: F5200
Run #: 1

Job #: 19-464
Tracking #: 0024
Technician: SJB
Date: 4/23/2019

	Temperature Data (°F)						
Elapsed Time (min)	FB Left	FB Right	FB Back	FB Top	FB Bottom	Stove Surface Average	Catalyst Exit
288	466	480	420	463	334	432.6	960
289	465	480	418	463	335	432.2	963
290	463	480	416	463	336	431.6	967
291	462	479	415	463	336	431.0	972
292	461	479	413	463	337	430.6	977
293	459	478	412	463	338	430.0	978
294	458	477	411	462	338	429.2	977
295	457	476	410	461	339	428.6	973
296	456	476	409	461	339	428.2	967
297	454	474	407	460	340	427.0	962
298	453	472	406	460	341	426.4	959
299	452	470	405	460	341	425.6	960
300	450	468	404	460	342	424.8	961
301	449	466	403	460	342	424.0	961
302	448	464	402	459	343	423.2	960
303	447	462	400	460	344	422.6	957
304	446	460	399	460	344	421.8	954
305	445	458	399	459	345	421.2	950
306	444	457	398	458	346	420.6	945
307	442	455	397	457	346	419.4	939
308	441	454	396	456	347	418.8	933
309	440	453	395	454	348	418.0	926
310	439	452	395	452	348	417.2	919
311	439	450	394	449	349	416.2	912
312	439	449	393	447	350	415.6	905
313	439	448	392	444	350	414.6	900
314	438	446	391	441	351	413.4	895
315	437	444	391	438	352	412.4	891
316	436	443	390	435	353	411.4	886
317	435	442	390	432	353	410.4	880
318	435	441	390	429	354	409.8	874
319	434	440	390	426	355	409.0	865
320	433	439	389	423	355	407.8	855
321	433	439	389	420	356	407.4	847
322	432	439	389	417	357	406.8	841
323	432	439	389	415	357	406.4	836
324	431	438	389	411	358	405.4	831
325	431	438	389	410	359	405.4	828
326	430	438	389	407	359	404.6	826
327	429	438	389	405	360	404.2	823
328	429	438	389	404	361	404.2	821
329	428	439	389	402	361	403.8	819
330	428	439	389	400	362	403.6	817
Average	435	406	369	539	257	401	1058

LAB SAMPLE DATA - ASTM E2515

Client: FPI
Model: F5200
Run #: 1

Job #: 19-464
Tracking #: 0024
Technician: SJB
Date: 4/23/2019

TRAIN A (1st Hour)

Sample Component	Sample Type	Filter, Probe, or O-Ring #	Weights		
			Final, mg	Tare, mg	Particulate, mg
A. Front filter catch	Filter	T161/T162	181.2	176.5	4.7
B. Rear filter catch	Filter				0.0
C. Probe catch*	Probe				0.0
D. O-Ring catch*	O-Ring				0.0

Sub-Total	Total Particulate, mg:	4.7

TRAIN A (Post 1st hour)

Sample Component	Sample Type	Filter, Probe, or O-Ring #	Weights		
			Final, mg	Tare, mg	Particulate, mg
A. Front filter catch	Filter	T168	181.3	88.5	4.3
B. Rear filter catch	Filter	T163		88.5	
C. Probe catch*	Probe	4A	116184.1	116183.1	1.0
D. O-Ring catch*	O-Ring	4A	3588.4	3588.0	0.4

Sub-Total	Total Particulate, mg:	5.7
Train A Aggregate	Total Particulate, mg:	**10.4**

TRAIN B

Sample Component	Reagent	Filter, Probe, or O-Ring #	Weights		
			Final, mg	Tare, mg	Particulate, mg
A. Front filter catch	Filter	T164/T167	273.7	176.5	9.0
B. Rear filter catch	Filter	T165		88.2	
C. Probe catch*	Probe	4B	116366.5	116365.9	0.6
D. O-Ring catch*	O-Ring	4B	3576.2	3576.0	0.2

Total Particulate, mg:	**9.8**

AMBIENT

Sample Component	Reagent	Filter, Probe, or O-Ring #	Weights		
			Final, mg	Tare, mg	Particulate, mg
A. Filter catch*	Filter	T166	88.6	88.5	0.1

Total Particulate, mg:	**0.1**

*Particulate catch that results in a negative number, is assumed to be zero for probes and O-rings, negative numbers for filters are assumed to be part of the O-Ring weight.

ASTM E3053 Wood Heater Run Sheets

Client: FPI Job Number: 19-464 Tracking #: 0024
Model: F5200 Run Number: 1 Test Date: 4/23/2019

Wood Heater Run Notes

Pre-Test Notes
Pre-Test Start Time: N/A
Air Control Setting: N/A

Time	Notes
N/A	High Fire Test begins from cold start

Test Notes
Test Burn Start Time: 9:36
Air Control Setting: Fully Open

Time	Notes
0 min	Loaded 4 lbs of kindling fuel and some scrap paper, lit with propane torch for 30 seconds, door open, bypass open, fan off.
2 min	Closed bypass
3 min	Closed door
8 min	@ 1.9 lbs, added remaining kindling fuel (2 lbs)
21 min	@ 2.1 lbs added 2.5 lbs of start-up fuel
27 min	@ 3.7 lbs, added remaining start-up fuel (6.6 lbs)
30 min	Changed front filter on both sampling trains
55 min	@ 4.6 lbs, leveled coal bed in preparation of fuel loading
56 min	Loaded test fuel, door closed within 40 seconds
60 min	Changed 1-hr filter
76 min	Turned fan on high (20 minutes after fuel loading, per manufacturer's instructions)
330 min	End of Test

Test Burn End Time: 15:36

Flue Gas Concentration Measurement

Calibration Gas Values: Span Gas CO_2 (%): 16.93 CO (%): 4.330
Mid Gas CO_2 (%): 10.00 CO (%): 2.51

Calibration Results:

	Pre Test			Post Test		
	Zero	Mid	Span	Zero	Mid	Span
Time	8:46	8:51	8:49	4/24 – 10:20	4/24 – 10:20	4/24 – 10:20
CO_2	0.00	10.09	16.93	-0.02	10.04	16.94
CO	0.000	2.497	4.330	-0.036	2.441	4.265

Flue Gas Probe Leak Check: Initial: No Leakage Final: No Leakage

Technician Signature: Date: 4/24/2019

ASTM E3053 Wood Heater Run Sheets

Client: FPI Job Number: 19-464 Tracking #: 0024
Model: F5200 Run Number: 1 Test Date: 4/23/2019

Test Photos

Kindling Fuel Load

Start-up Fuel Load

High Fire Fuel Load

Residual Start-up Fuel Coal Bed

Technician Signature: Date: 4/24/2019

ASTM E3053 Wood Heater Run Sheets

Client: FPI Job Number: 19-464 Tracking #: 0024
Model: F5200 Run Number: 1 Test Date: 4/23/2019

High Fire Fuel Loaded

Residual High Fire Load Coal Bed

N/A

Low Fire Fuel Load

N/A

Low Fire Fuel Loaded

Technician Signature: Date: 4/24/2019

WOOD STOVE TEST DATA PACKET
ASTM E3053/E2515

Run 2 Data Summary

Client: FPI
Model: F5200
Job #: 19-464
Tracking #: 0024
Test Date: 4/23/2019

4/29/2019

Techician Signature | Date

TEST RESULTS - ASTM E3053 / ASTM E2515

Client: FPI
Model: F5200
Run #: 2

Job #: 19-464
Tracking #: 0024
Technician: SJB
Date: 4/23/2019

Burn Rate (kg/hr):	1.07

	Ambient Sample	Sample Train A	Sample Train B	1st Hour Filter
Total Sample Volume (ft^3)	128.498	167.482	166.665	8.907
Average Gas Velocity in Dilution Tunnel (ft/sec)	18.42			
Average Gas Flow Rate in Dilution Tunnel (dscf/hr)	12450.0			
Average Gas Meter Temperature (°F)	73.8	100.9	99.6	95.9
Total Sample Volume (dscf)	127.801	160.201	159.138	10.550
Average Tunnel Temperature (°F)	84.6			
Total Time of Test (min)	1110			
Total Particulate Catch (mg)	0.1	5.3	5.1	1.7
Particulate Concentration, dry-standard (g/dscf)	0.0000008	0.0000331	0.0000320	0.0001611
Total PM Emissions (g)	0.18	7.44	7.20	2.00
Particulate Emission Rate (g/hr)	0.01	0.40	0.39	2.00
Emissions Factor (g/kg)	-	0.38	0.36	-
Difference from Average Total Particulate Emissions (g)	-	0.12	0.12	-
Difference from Average Emissions Factor (g/kg)	-	0.01	0.01	-

Final Average Results	
Total Particulate Emissions (g)	7.32
Particulate Emission Rate (g/hr)	0.40
Emissions Factor (g/kg)	0.37
HHV Efficiency (%)	82.4%
LHV Efficiency (%)	88.1%
CO Emissions (g/min)	0.10

Quality Checks	Requirement	Observed	Result
Dual Train Precision	Each train within 7.5% of average emissions (in grams), or emission factors within 0.5 g/kg	See Above	OK
Filter Temps	>80 °F, <90 °F	Min: 81 / Max: 86	OK
Face Velocity	< 30 ft/min	8.2	OK
Leakage Rate	Less than 4% of average sample rate	0.001 cfm	OK
Ambient Temp	55-90 °F	Min: 71 / Max: 77	OK
Negative Probe Weight Evaluation	<5% of Total Catch	-3.8%	OK
Pro-Rate Variation	90% of readings between 90-110%; none greater than 120% or less than 80%	See Data Tabs	OK

B415.1 Efficiency Results

Manufacturer:	FPI
Model:	F5200
Date:	04/23/19
Run:	2
Control #:	19-464
Test Duration:	1110
Output Category:	Low

Test Results in Accordance with CSA B415.1-09

	HHV Basis	LHV Basis
Overall Efficiency	82.4%	88.1%
Combustion Efficiency	99.5%	99.5%
Heat Transfer Efficiency	82.8%	88.6%

Output Rate (kJ/h)	17,550	16,648	**(Btu/h)**
Burn Rate (kg/h)	1.07	2.35	**(lb/h)**
Input (kJ/h)	21,302	20,207	**(Btu/h)**

Test Load Weight (dry kg)	19.74	43.51	**dry lb**
MC wet (%)	17.90		
MC dry (%)	21.80		
Particulate (g)	7.32		
CO (g)	108		
Test Duration (h)	18.50		

Emissions	Particulate	CO
g/MJ Output	0.02	0.33
g/kg Dry Fuel	0.37	5.48
g/h	0.40	5.85
g/min	0.01	0.10
lb/MM Btu Output	0.05	0.77

Air/Fuel Ratio (A/F)	9.99

VERSION: **2.2** **12/14/2009**

HIGH FIRE FUEL LOAD DATA - ASTM E3053

Client:	FPI	Job #:	19-464
Model:	F5200	Tracking #	0024
Run #:	2	Technician:	SJB
		Date:	4/23/2019

Nominal Loading Density (lbs/ft^3, wet basis):	10		
Usable Firebox Volume (ft^3):	4.42		
Target Load Weight (lbs):	44.20		
Total Load Weight Range (lbs):	42.00	to	46.40
Core Load Weight Range (lbs):	19.90	to	28.70
Remainder Load Weight Range (lbs):	15.50	to	24.30
Core Load Piece Range (lbs):	6.60	to	11.10
Remainder Load Piece Range (lbs):	4.40	to	24.30
Max Allowable Kindling Weight (lbs):	9.19		
Max Allowable Start-up Fuel Weight (lbs):	13.79		

CORE LOAD DATA

				Fuel Piece Moisture Readings (%DB)					Dry Weight	
Piece #	Length (in)	Weight (lbs)	Within Spec?	1	2	3	Ave.	Within Spec?	lbs	kg
1	20.00	7.61	In Range	24.9	26.7	27.4	26.3	In Range	6.02	2.73
2	20.00	7.96	In Range	25.0	19.8	16.7	20.5	In Range	6.61	3.00
3	20.00	10.74	In Range	26.2	22.9	25.2	24.8	In Range	8.61	3.90
Core Load Wt. (lbs)		26.31	In Range							

REMAINDER LOAD DATA (1 to 3 Pieces)

				Fuel Piece Moisture Readings (%DB)					Dry Weight	
Piece #	Length (in)	Weight (lbs)	Within Spec?	1	2	3	Ave.	Within Spec?	lbs	kg
1	20.00	7.14	In Range	21.9	22.9	27.4	24.1	In Range	5.75	2.61
2	20.00	5.93	In Range	19.6	18.6	25.9	21.4	In Range	4.89	2.22
3	20.00	6.59	In Range	19.0	26.1	17.0	20.7	In Range	5.46	2.48
Remainder Load (lbs)		19.66	In Range							

Total Load Weight (lbs):	45.97	In Range	
Core Load % of Total Weight:	57%	In Range	45-65%
Remainder % of Total Weight:	43%	In Range	35-55%
Total Load % of Target Weight:	104%	In Range	95-105%
Actual Fuel Loading Density (lb/ft3):	10.4		
Total Load Average Moisture Content (%DB):	23.1	In Range	19-25%
Total Load Average Moisture Content (%WB):	18.8		
Total Test Load Weight (dry basis):	37.34 lbs	16.94 kg	

KINDLING AND START-UP FUEL

		Kindling Moisture Readings (%DB)					Dry Weight	
Kindling Weight (lbs)	Within Spec?	1	2	3	Avg.	Within Spec?	lbs	kg
5.95	In Range	10	10	10	10.0	In Range	5.41	2.45

		Start-up Moisture Readings (%DB)					Dry Weight	
Start-up Fuel Wt. (lb)	Within Spec?	1	2	3	Avg.	Within Spec?	lbs	kg
9.17	In Range	18.7	19.4	22.7	20.3	In Range	7.62	3.46

TEST FUEL LOADING RANGE

Allowable Residual Start-up Fuel Range (lb):	4.6	to	9.2	
Actual Residual Start-up Fuel Weight (lb):		4.6		In Range

LOW & MEDIUM FIRE FUEL LOAD DATA - ASTM E3053

Client:	FPI	Job #:	19-464
Model:	F5200	Tracking #	0024
Run #:	2	Technician:	SJB
		Date:	4/23/2019

Nominal Loading Density (lbs/ft^3, wet basis):	12		
Usable Firebox Volume (ft^3):	4.42		
Target Load Weight (lbs):	53.04		
Total Load Weight Range (lbs):	50.39	to	55.69
Core Load Weight Range (lbs):	23.87	to	34.48
Remainder Load Weight Range (lbs):	18.56	to	29.17
Core Load Piece Range (lbs):	7.96	to	13.26
Remainder Load Piece Range (lbs):	5.30	to	10.61

CORE LOAD DATA

				Fuel Piece Moisture Readings (%DB)					Dry Weight	
Piece #	Length (in)	Weight (lbs)	Within Spec?	1	2	3	Ave.	Within Spec?	lbs	kg
1	20.00	10.21	In Range	24.6	19.1	19.7	21.1	In Range	8.43	3.82
2	20.00	8.22	In Range	27.9	19.7	18.4	22.0	In Range	6.74	3.06
3	20.00	9.77	In Range	25.9	17.5	22.9	22.1	In Range	8.00	3.63
Core Load Wt. (lbs)		28.20	In Range							

REMAINDER LOAD DATA (3 to 4 Pieces)

				Fuel Piece Moisture Readings (%DB)					Dry Weight	
Piece #	Length (in)	Weight (lbs)	Within Spec?	1	2	3	Ave.	Within Spec?	lbs	kg
1	20.00	5.73	In Range	23.2	28.4	17.4	23.0	In Range	4.66	2.11
2	20.00	8.69	In Range	17.8	23.2	26.9	22.6	In Range	7.09	3.21
3	20.00	10.32	In Range	22.5	17.6	21.9	20.7	In Range	8.55	3.88
4			NA				NA	NA	NA	NA
Remainder Load (lbs)		24.74	In Range							

Remainder Load Small/Large Piece Weight Ratio:	56%	In Range	≤ 67%
Total Load Weight (lbs):	52.94	In Range	
Core Load % of Total Weight:	53%	In Range	45-65%
Remainder % of Total Weight:	47%	In Range	35-55%
Total Load % of Target Weight:	100%	In Range	95-105%
Actual Fuel Loading Density (lb/ft3):	12.0		
Total Load Average Moisture Content (%DB):	21.8	In Range	19-25%
Total Load Average Moisture Content (%WB):	17.9		
Total Test Load Weight (dry basis):	43.47 lbs	19.72 kg	

TEST FUEL LOADING RANGE

Allowable Charcoal Bed Weight Range (lb):	5.3	to	10.5	
Actual Charcoal Bed Wt. (lb):		8.7	In Range	

TEST END POINT

Actual Fuel Load Ending Weight (lb):	0.0	Valid Test (≥90%)

Total Fuel Burned During Test Run:	52.9	lbs, wet basis
	43.5	lbs, dry basis
	19.72	kg, dry basis

DILUTION TUNNEL & MISC. DATA - ASTM E3053 / E2515

Client:	FPI	Job #:	19-464
Model:	F5200	Tracking #:	0024
Run #:	2	Technician:	SJB
Test Start Time:	15:23	Date:	4/23/2019
Test Type:	Low Fire		

Recording Interval (min):	10
Total Sampling Time (min):	1110

	Pre-Test	Post Test	Avg.
Barometric Pressure (in. Hg)	30.05	30.2	30.13
Relative Humidity (%)	38.4	22.0	
Room Air Velocity (ft/min)	0	0	
Scale Audit (lbs)	10.0	10.0	
Ambient Sample Volume:		128.498	ft^3

Meter Box γ Factor:	1.004	(A)
Meter Box γ Factor:	1.000	(B)
Meter Box γ Factor:	0.999	(Ambient)

Induced Draft Check (in. H_2O):	0
Smoke Capture Check (%):	100%
Date Flue Pipe Last Cleaned:	4/23/2019

Sample Train Post-Test Leak Checks

(A)	0.001	cfm @	-13	in. Hg
(B)	0.000	cfm @	-13	in. Hg
(Ambient)	0.002	cfm @	-14	in. Hg

DILUTION TUNNEL FLOW

Traverse Data

Point	dP (in H_2O)	Temp (°F)
1	0.078	74
2	0.092	74
3	0.080	74
4	0.066	74
5	0.078	74
6	0.090	74
7	0.086	74
8	0.072	74
Center	0.082	74

Static Pressure: -0.250 in. H_2O

Dilution Tunnel H_2O:	2.00	percent
Tunnel Diameter:	6	inches
Pitot Tube Cp:	0.99	[unitless]
Dilution Tunnel MW(dry):	29.00	lb/lb-mole
Dilution Tunnel MW(wet):	28.78	lb/lb-mole
Tunnel Area:	0.1963	ft^2
V_{strav}:	18.85	ft/sec
V_{scent}:	19.05	ft/sec
F_p:	0.989	[ratio]
Initial Tunnel Flow:	215.9	scf/min

TEST FUEL PROPERTIES

ASTM 3053-17 - Table A1.1 Fuel Properties by Fuel Species

Select Fuel Type	Species	%C	%H	%O	%Ash	MJ/kg	BTU/lb
	Ash, White	49.70	6.90	43.00	0.30	20.75	8927
	Beech	48.70	5.80	44.70	0.60	18.80	8088
	Birch, Sweet	49.80	6.50	43.40	0.30	20.12	8656
	Birch, Yellow	49.80	6.50	43.40	0.30	20.12	8656
	Doug Fir (Coast, Interior West/North)	48.73	6.87	43.90	0.50	19.81	8522
	Doug Fir (Interioir South)	48.73	6.87	43.90	0.50	19.81	8522
	Elm, Rock	50.40	6.60	42.30	0.70	20.49	8815
	Elm, Soft	50.40	6.60	42.30	0.70	20.49	8815
	Gum, Red	50.88	6.06	41.57	1.28	19.72	8478
	Larch, Western	50.54	6.36	42.40	0.70	17.58	7558
X	Maple, Hard	50.64	6.02	41.74	1.35	19.96	8587
	Maple, Sugar	50.64	6.02	41.74	1.35	19.96	8587
	Oak, Red	49.50	6.62	43.70	0.20	20.20	8690
	Oak, White	50.40	6.59	42.70	0.20	20.50	8819
	Pine, Southern	52.60	7.00	40.10	1.31	22.30	9587
	Pine, Southern Long Leaf	52.60	7.02	40.10	1.30	22.30	9594
	Other						

WOODSTOVE PREBURN DATA

Client: FPI
Model: F5200
Run #: 2

Job #: 19-464
Tracking #: 0024
Technician: SJB
Date: 4/23/2019

Recording Interval (min): 10
Run Time (min): 330

			Temperatures (°F)							
Elapsed Time (min)	Scale Reading (lbs)	Flue Draft (in H_2O)	FB Left	FB Right	FB Back	FB Top	FB Bottom	Stove Surface Average	Flue	Ambient
0	4.0	0.000	67	66	66	67	66	66.4	67	64
10	3.3	-0.060	184	181	181	311	75	186.4	396	65
20	2.1	-0.060	250	230	230	428	107	249.0	407	65
30	9.9	-0.070	326	294	294	443	142	299.8	461	66
40	7.3	-0.090	370	332	332	606	175	363.0	546	67
50	5.5	-0.080	446	393	393	675	200	421.4	549	68
60	48.9	-0.090	475	442	442	693	221	454.6	600	68
70	46.7	-0.090	421	399	399	705	241	433.0	580	69
80	44.6	-0.080	424	382	382	640	250	415.6	552	70
90	42.6	-0.080	438	376	376	587	251	405.6	530	71
100	40.6	-0.090	474	380	380	571	249	410.8	531	70
110	38.6	-0.080	493	385	385	569	245	415.4	531	71
120	36.5	-0.090	494	387	387	556	242	413.2	531	70
130	34.5	-0.080	484	390	390	581	241	417.2	545	71
140	32.2	-0.080	480	403	403	616	241	428.6	559	72
150	30.1	-0.080	470	426	426	628	243	438.6	556	72
160	28.1	-0.090	464	447	447	633	248	447.8	556	72
170	26.1	-0.080	474	459	459	633	256	456.2	540	72
180	24.4	-0.090	472	466	466	630	266	460.0	537	73
190	23.1	-0.080	462	458	458	591	274	448.6	511	72
200	22.0	-0.080	449	449	449	561	280	437.6	501	72
210	20.7	-0.070	450	448	448	537	286	433.8	493	72
220	19.6	-0.080	452	445	445	529	293	432.8	486	72
230	18.5	-0.080	456	443	443	513	299	430.8	485	73
240	17.5	-0.070	460	443	443	505	305	431.2	493	72
250	16.3	-0.080	472	453	453	524	310	442.4	505	73
260	15.3	-0.070	485	458	458	524	315	448.0	498	73
270	14.4	-0.070	499	462	462	495	321	447.8	474	73
280	13.5	-0.080	481	476	476	469	329	446.2	461	72
290	12.6	-0.060	463	480	480	463	336	444.4	463	73
300	11.8	-0.060	450	468	468	460	342	437.6	461	73
310	11.1	-0.070	439	452	452	452	348	428.6	447	73
320	10.3	-0.060	433	439	439	423	355	417.8	424	73
330	9.7	-0.050	428	439	439	400	362	413.6	404	73

BOX A TEST DATA - ASTM E3053 / ASTM E2515

Client: FPI
Model: F5200
Run #: 2

Job #: 19-464
Tracking #: 0024
Technician: SJB
Date: 4/23/2019

	Particulate Sampling Data							Fuel Weight (lb)		Temperature Data (°F)			
Elapsed Time (min)	Gas Meter (ft^3)	Sample Rate (cfm)	Dilution Tunnel dP (in H_2O)	Orifice dH (in H_2O)	Meter Temp (°F)	Meter Vacuum (in Hg)	Pro. Rate (%)	Scale Reading	Weight Change	Dilution Tunnel	Flue	Filter	Ambient
0	0.244		0.083	0.02	96	-0.07		53.0		107	446	81	73
10	1.706	0.146	0.083	2.25	94	-1.65	96	50.9	-2.1	107	499	86	73
20	3.191	0.149	0.076	2.23	95	-2.75	101	50.0	-0.9	97	374	83	74
30	4.678	0.149	0.076	2.30	95	-1.94	101	49.0	-1	91	373	83	73
40	6.173	0.150	0.076	2.24	96	-0.47	101	47.9	-1.1	90	347	83	73
50	7.666	0.149	0.077	2.26	97	-0.21	100	47.0	-0.9	88	329	83	74
60	9.151	0.149	0.071	2.21	98	-2.31	103	45.9	-1.1	89	347	82	73
70	10.655	0.150	0.077	2.30	98	-2.45	101	45.0	-0.9	89	356	83	73
80	12.161	0.151	0.075	2.28	99	-1.26	102	44.1	-0.9	89	364	83	73
90	13.664	0.150	0.072	2.28	99	0	104	43.0	-1.1	92	372	82	74
100	15.160	0.150	0.073	2.27	100	0	103	41.8	-1.2	92	367	83	75
110	16.661	0.150	0.079	2.25	100	-2.61	99	40.8	-1	92	364	82	75
120	18.157	0.150	0.073	2.21	100	-1.39	103	39.8	-1	92	369	83	75
130	19.645	0.149	0.074	2.22	101	-1.65	101	38.8	-1	93	371	83	76
140	21.139	0.149	0.071	2.30	101	0	104	37.9	-0.9	93	368	84	76
150	22.653	0.151	0.085	2.31	102	-1.46	96	36.9	-1	93	367	82	76
160	24.159	0.151	0.083	2.27	102	-2.62	97	36.0	-0.9	93	366	83	76
170	25.666	0.151	0.070	2.26	102	-1.43	105	35.2	-0.8	92	360	82	76
180	27.166	0.150	0.076	2.26	103	-2.53	100	34.3	-0.9	92	357	83	76
190	28.663	0.150	0.076	2.25	103	-2.06	100	33.4	-0.9	92	350	82	76
200	30.161	0.150	0.085	2.26	103	0	95	32.6	-0.8	92	348	84	76
210	31.651	0.149	0.066	2.22	103	-0.15	107	31.8	-0.8	91	350	82	76
220	33.138	0.149	0.081	2.22	103	-0.03	96	30.8	-1	92	360	84	76
230	34.624	0.149	0.084	2.19	103	-0.49	95	29.9	-0.9	92	368	83	76
240	36.107	0.148	0.073	2.17	103	-2.79	101	29.1	-0.8	92	362	83	76
250	37.586	0.148	0.083	2.16	103	-2.81	95	28.2	-0.9	92	362	83	76
260	39.064	0.148	0.081	2.15	103	-2.8	96	27.3	-0.9	92	366	83	76
270	40.538	0.147	0.078	2.18	103	-2.42	97	26.5	-0.8	92	366	83	76
280	42.010	0.147	0.072	2.15	103	-2.42	101	25.6	-0.9	92	360	83	76
290	43.480	0.147	0.092	2.14	103	-0.07	89	24.7	-0.9	93	372	83	76
300	44.949	0.147	0.074	2.12	104	-0.54	100	23.6	-1.1	94	390	83	76
310	46.414	0.147	0.070	2.11	104	-0.89	102	22.5	-1.1	94	392	83	77
320	47.877	0.146	0.081	2.11	104	-2.52	95	21.6	-0.9	93	388	83	77

BOX A TEST DATA - ASTM E3053 / ASTM E2515

Client: FPI
Model: F5200
Run #: 2

Job #: 19-464
Tracking #: 0024
Technician: SJB
Date: 4/23/2019

	Particulate Sampling Data							Fuel Weight (lb)		Temperature Data (°F)			
Elapsed Time (min)	Gas Meter (ft^3)	Sample Rate (cfm)	Dilution Tunnel dP (in H_2O)	Orifice dH (in H_2O)	Meter Temp (°F)	Meter Vacuum (in Hg)	Pro. Rate (%)	Scale Reading	Weight Change	Dilution Tunnel	Flue	Filter	Ambient
330	49.340	0.146	0.085	2.13	104	-0.22	93	20.6	-1	94	378	83	77
340	50.808	0.147	0.076	2.24	104	-0.87	98	19.5	-1.1	94	381	83	77
350	52.302	0.149	0.078	2.22	104	-0.12	99	18.4	-1.1	93	380	84	77
360	53.798	0.150	0.074	2.20	104	-0.86	101	17.6	-0.8	93	368	82	77
370	55.290	0.149	0.068	2.21	104	-0.13	105	16.9	-0.7	92	351	83	77
380	56.780	0.149	0.083	2.20	104	-3.06	95	16.3	-0.6	91	336	82	76
390	58.269	0.149	0.080	2.21	104	-2.58	97	15.8	-0.5	90	324	83	77
400	59.762	0.149	0.071	2.20	104	-0.78	103	15.3	-0.5	89	309	82	77
410	61.261	0.150	0.074	2.35	104	-0.31	101	14.8	-0.5	88	297	83	76
420	62.785	0.152	0.076	2.32	104	-2.71	101	14.3	-0.5	88	293	83	76
430	64.308	0.152	0.074	2.32	104	-2.86	103	13.7	-0.6	87	289	83	76
440	65.831	0.152	0.083	2.32	104	-0.34	97	13.2	-0.5	87	296	83	76
450	67.349	0.152	0.077	2.31	103	-2.83	101	12.5	-0.7	88	305	83	76
460	68.873	0.152	0.080	2.30	103	-3.02	99	11.8	-0.7	88	321	83	76
470	70.391	0.152	0.076	2.32	103	-0.34	101	11.3	-0.5	88	315	83	76
480	71.912	0.152	0.089	2.29	103	-2.82	94	10.9	-0.4	87	295	83	76
490	73.430	0.152	0.076	2.32	103	-2.96	101	10.5	-0.4	86	279	82	76
500	74.951	0.152	0.083	2.31	103	-1.34	97	10.3	-0.2	85	262	83	75
510	76.472	0.152	0.079	2.31	103	-3.11	99	10.1	-0.2	85	250	82	75
520	77.990	0.152	0.087	2.30	103	-2.95	94	9.8	-0.3	84	242	83	75
530	79.511	0.152	0.073	2.30	103	-3.01	103	9.7	-0.1	83	235	82	75
540	81.028	0.152	0.088	2.31	103	-0.29	93	9.4	-0.3	82	228	83	75
550	82.552	0.152	0.070	2.30	103	-1.5	105	9.3	-0.1	82	223	82	75
560	84.069	0.152	0.079	2.30	103	-1.94	99	9.1	-0.2	82	221	83	75
570	85.591	0.152	0.076	2.30	103	-0.66	101	8.9	-0.2	81	218	83	75
580	87.107	0.152	0.074	2.29	103	-2.8	102	8.7	-0.2	81	215	82	74
590	88.628	0.152	0.083	2.33	102	-3.04	97	8.6	-0.1	81	212	83	74
600	90.148	0.152	0.072	2.32	102	-0.76	104	8.4	-0.2	81	213	82	74
610	91.667	0.152	0.085	2.32	102	-0.33	95	8.2	-0.2	80	210	83	74
620	93.187	0.152	0.076	2.29	102	-0.32	101	8.0	-0.2	80	210	82	74
630	94.702	0.152	0.077	2.33	102	-2.96	100	7.9	-0.1	80	210	83	74
640	96.222	0.152	0.067	2.30	102	-0.28	107	7.7	-0.2	80	208	83	73
650	97.738	0.152	0.076	2.32	102	-2.62	101	7.5	-0.2	80	207	82	73

BOX A TEST DATA - ASTM E3053 / ASTM E2515

Client: FPI
Model: F5200
Run #: 2

Job #: 19-464
Tracking #: 0024
Technician: SJB
Date: 4/23/2019

	Particulate Sampling Data							Fuel Weight (lb)		Temperature Data (°F)			
Elapsed Time (min)	Gas Meter (ft^3)	Sample Rate (cfm)	Dilution Tunnel dP (in H_2O)	Orifice dH (in H_2O)	Meter Temp (°F)	Meter Vacuum (in Hg)	Pro. Rate (%)	Scale Reading	Weight Change	Dilution Tunnel	Flue	Filter	Ambient
660	99.259	0.152	0.076	2.33	102	-1.6	101	7.3	-0.2	80	208	83	73
670	100.774	0.152	0.076	2.32	102	-2.97	100	7.2	-0.1	80	207	82	73
680	102.296	0.152	0.074	2.31	102	-2.94	102	7.0	-0.2	80	208	83	73
690	103.811	0.152	0.084	2.32	101	-0.5	96	6.8	-0.2	80	206	83	73
700	105.331	0.152	0.085	2.30	101	-0.56	95	6.6	-0.2	80	207	82	73
710	106.846	0.152	0.074	2.33	101	-2.87	102	6.5	-0.1	79	207	83	73
720	108.366	0.152	0.078	2.31	101	-0.34	100	6.3	-0.2	79	206	82	73
730	109.882	0.152	0.084	2.31	101	-2.91	96	6.1	-0.2	79	205	82	73
740	111.401	0.152	0.085	2.32	101	-3.06	95	5.9	-0.2	79	203	83	73
750	112.919	0.152	0.071	2.32	101	-1.4	104	5.8	-0.1	79	203	83	72
760	114.436	0.152	0.077	2.31	101	-2.75	100	5.7	-0.1	79	200	82	72
770	115.954	0.152	0.072	2.32	100	-1.09	104	5.5	-0.2	79	199	83	72
780	117.469	0.152	0.078	2.31	100	-2.59	99	5.3	-0.2	79	199	83	72
790	118.988	0.152	0.076	2.32	100	-2.32	101	5.1	-0.2	78	198	82	72
800	120.502	0.151	0.072	2.32	100	-2.81	103	5.1	0	78	199	82	72
810	122.021	0.152	0.078	2.34	100	-0.34	100	4.8	-0.3	78	199	82	72
820	123.535	0.151	0.072	2.29	100	-0.32	103	4.6	-0.2	78	200	82	72
830	125.054	0.152	0.082	2.33	100	-0.27	97	4.4	-0.2	78	202	82	72
840	126.567	0.151	0.073	2.32	100	-2.15	103	4.2	-0.2	78	203	82	71
850	128.086	0.152	0.076	2.31	99	-0.27	101	4.1	-0.1	78	202	82	71
860	129.599	0.151	0.070	2.33	99	-1.21	105	3.9	-0.2	78	206	82	71
870	131.117	0.152	0.079	2.31	99	-1.17	99	3.7	-0.2	78	206	82	71
880	132.631	0.151	0.071	2.31	99	-2.88	104	3.5	-0.2	78	205	82	71
890	134.150	0.152	0.080	2.32	99	-2.99	99	3.4	-0.1	78	205	82	71
900	135.663	0.151	0.072	2.32	99	-1.33	103	3.2	-0.2	77	205	82	71
910	137.182	0.152	0.084	2.32	99	-2.2	96	3.0	-0.2	77	205	82	71
920	138.695	0.151	0.078	2.32	99	-1.09	99	2.9	-0.1	77	204	82	71
930	140.213	0.152	0.074	2.33	99	-0.92	102	2.7	-0.2	77	203	82	71
940	141.725	0.151	0.075	2.32	98	-2.9	101	2.5	-0.2	77	203	82	71
950	143.243	0.152	0.078	2.31	98	-1.84	100	2.3	-0.2	77	202	82	71
960	144.755	0.151	0.078	2.31	98	-1.62	99	2.2	-0.1	77	200	82	71
970	146.273	0.152	0.077	2.31	98	-2.96	100	2.0	-0.2	77	198	82	71
980	147.785	0.151	0.074	2.29	98	-1.51	102	1.9	-0.1	77	197	82	71

BOX A TEST DATA - ASTM E3053 / ASTM E2515

Client: FPI
Model: F5200
Run #: 2

Job #: 19-464
Tracking #: 0024
Technician: SJB
Date: 4/23/2019

	Particulate Sampling Data							Fuel Weight (lb)		Temperature Data (°F)			
Elapsed Time (min)	Gas Meter (ft^3)	Sample Rate (cfm)	Dilution Tunnel dP (in H_2O)	Orifice dH (in H_2O)	Meter Temp (°F)	Meter Vacuum (in Hg)	Pro. Rate (%)	Scale Reading	Weight Change	Dilution Tunnel	Flue	Filter	Ambient
990	149.303	0.152	0.071	2.31	98	-2.82	105	1.7	-0.2	78	196	82	71
1000	150.816	0.151	0.076	2.32	98	-2.59	101	1.6	-0.1	77	194	82	71
1010	152.334	0.152	0.075	2.31	98	-0.39	102	1.4	-0.2	77	195	82	71
1020	153.846	0.151	0.082	2.33	98	-0.44	97	1.3	-0.1	77	194	82	71
1030	155.364	0.152	0.075	2.32	98	-0.25	102	1.1	-0.2	77	192	82	71
1040	156.876	0.151	0.076	2.32	98	-1.61	101	1.0	-0.1	77	191	82	71
1050	158.393	0.152	0.081	2.31	98	-3.13	98	0.8	-0.2	77	190	82	71
1060	159.906	0.151	0.072	2.31	98	-2.84	104	0.6	-0.2	77	188	82	71
1070	161.424	0.152	0.076	2.32	98	-1.63	101	0.5	-0.1	77	188	82	71
1080	162.936	0.151	0.071	2.31	98	-1.91	104	0.4	-0.1	77	187	82	71
1090	164.453	0.152	0.072	2.32	98	-2.96	104	0.3	-0.1	77	187	82	71
1100	165.964	0.151	0.079	2.31	98	-2.88	99	0.1	-0.2	77	188	83	71
1110	167.482	0.152	0.087	2.32	98	-0.4	94	0.0	-0.1	77	185	82	71
Avg/Tot	167.482	0.151	0.077	2.26	101	-1.64	100			85	272	83	73.8

BOX B TEST DATA - ASTM E3053 / ASTM E2515

Client: FPI
Model: F5200
Run #: 2

Job #: 19-464
Tracking #: 0024
Technician: SJB
Date: 4/23/2019

	Particulate Sampling Data							Flue Gas Data		
Elapsed Time (min)	Gas Meter (ft^3)	Sample Rate (cfm)	Orifice dH (in H_2O)	Meter Temp (°F)	Meter Vacuum (in Hg)	Pro. Rate (%)	Filter (°F)	Flue Draft (in H_2O)	CO_2 (%)	CO (%)
0	0.000		0.00	95	-1		84	0.000	5.04	0.17
10	1.443	0.144	2.26	93	-1.87	96	85	-0.070	14.48	0.05
20	2.925	0.148	2.24	93	-2.66	102	86	-0.060	10.81	0.04
30	4.399	0.147	2.23	94	-1.27	100	84	-0.060	14.50	0.03
40	5.869	0.147	2.20	95	-1.38	100	86	-0.070	14.24	0.00
50	7.339	0.147	2.28	96	-0.81	99	85	-0.070	12.28	0.00
60	8.829	0.149	2.24	97	-1.7	104	84	-0.060	13.56	0.01
70	10.310	0.148	2.21	97	-1	100	86	-0.050	14.20	0.01
80	11.786	0.148	2.35	97	-1.64	100	84	-0.060	15.14	0.00
90	13.296	0.151	2.27	98	-3.5	105	84	-0.060	16.09	0.12
100	14.781	0.149	2.19	98	-2.78	103	84	-0.060	15.85	0.05
110	16.257	0.148	2.24	99	-1.74	98	84	-0.060	14.50	0.00
120	17.727	0.147	2.20	100	-4.21	101	85	-0.070	14.44	0.04
130	19.225	0.150	2.25	100	-1.8	103	84	-0.050	14.44	0.04
140	20.716	0.149	2.24	101	-0.96	104	85	-0.050	14.45	0.01
150	22.204	0.149	2.23	101	-2.81	95	84	-0.060	14.50	0.01
160	23.689	0.149	2.22	101	-0.78	96	85	-0.060	14.14	0.00
170	25.174	0.149	2.21	102	-1.51	104	84	-0.050	13.75	0.00
180	26.655	0.148	2.20	102	-1.04	100	84	-0.060	13.63	0.00
190	28.135	0.148	2.19	102	-0.78	99	85	-0.060	13.46	0.02
200	29.611	0.148	2.19	102	-0.65	94	83	-0.070	13.85	0.00
210	31.084	0.147	2.18	102	-0.81	106	85	-0.060	14.32	0.02
220	32.557	0.147	2.16	102	-0.96	96	84	-0.050	15.73	0.02
230	34.025	0.147	2.16	103	-1.17	94	84	-0.060	15.46	0.00
240	35.492	0.147	2.15	103	-2.88	100	84	-0.070	14.37	0.00
250	36.957	0.147	2.15	103	-2.89	94	83	-0.040	14.71	0.00
260	38.420	0.146	2.14	103	-0.74	95	85	-0.070	15.41	0.01
270	39.881	0.146	2.14	103	-2.41	97	84	-0.080	13.95	0.02
280	41.342	0.146	2.14	103	-3.18	101	85	-0.060	14.33	0.01
290	42.802	0.146	2.13	103	-1.1	89	84	-0.060	17.50	0.26
300	44.257	0.146	2.11	103	-3.16	99	84	-0.060	17.62	1.12
310	45.712	0.146	2.12	103	-2.39	102	85	-0.060	17.89	0.37

BOX B TEST DATA - ASTM E3053 / ASTM E2515

Client: FPI
Model: F5200
Run #: 2

Job #: 19-464
Tracking #: 0024
Technician: SJB
Date: 4/23/2019

	Particulate Sampling Data							Flue Gas Data		
Elapsed Time (min)	Gas Meter (ft^3)	Sample Rate (cfm)	Orifice dH (in H_2O)	Meter Temp (°F)	Meter Vacuum (in Hg)	Pro. Rate (%)	Filter (°F)	Flue Draft (in H_2O)	CO_2 (%)	CO (%)
320	47.163	0.145	2.11	103	-3.26	94	84	-0.060	16.98	0.00
330	48.615	0.145	2.11	103	-0.78	92	85	-0.060	17.14	0.30
340	50.074	0.146	2.24	102	-0.8	98	85	-0.060	17.82	0.51
350	51.565	0.149	2.23	102	-0.96	99	84	-0.070	17.47	0.71
360	53.055	0.149	2.21	102	-2.32	102	86	-0.040	15.90	0.23
370	54.542	0.149	2.21	102	-2.48	106	84	-0.060	13.65	0.00
380	56.029	0.149	2.21	102	-1.78	96	85	-0.060	13.69	0.00
390	57.516	0.149	2.22	102	-0.97	97	85	-0.060	13.19	0.00
400	59.005	0.149	2.22	102	-3.43	103	84	-0.060	12.77	0.00
410	60.500	0.150	2.33	102	-3.21	101	85	-0.050	12.93	0.00
420	62.019	0.152	2.32	102	-3.05	102	84	-0.060	13.41	0.00
430	63.542	0.152	2.32	102	-1.75	103	86	-0.060	13.92	0.00
440	65.063	0.152	2.32	102	-3.41	97	84	-0.050	14.61	0.00
450	66.582	0.152	2.34	102	-3.37	101	86	-0.050	15.66	0.03
460	68.102	0.152	2.33	102	-1.1	99	84	-0.060	15.72	0.03
470	69.619	0.152	2.32	102	-1.14	102	86	-0.060	13.54	0.00
480	71.141	0.152	2.32	102	-1.09	94	84	-0.040	11.53	0.00
490	72.657	0.152	2.33	102	-1.94	101	86	-0.040	10.97	0.00
500	74.179	0.152	2.32	102	-1.04	97	84	-0.030	10.55	0.00
510	75.695	0.152	2.33	102	-3.25	99	86	-0.050	10.49	0.00
520	77.215	0.152	2.32	102	-1.59	95	84	-0.040	10.50	0.00
530	78.732	0.152	2.32	102	-1.36	103	86	-0.040	10.53	0.00
540	80.251	0.152	2.32	102	-3.4	94	85	-0.050	10.71	0.00
550	81.770	0.152	2.33	102	-1.73	105	85	-0.030	10.78	0.00
560	83.289	0.152	2.32	102	-1.09	99	86	-0.030	10.80	0.00
570	84.809	0.152	2.31	101	-2.96	101	84	-0.040	10.81	0.00
580	86.326	0.152	2.33	101	-2.27	102	86	-0.030	10.97	0.00
590	87.846	0.152	2.32	101	-3.41	97	85	-0.030	10.94	0.00
600	89.362	0.152	2.33	101	-1.64	104	85	-0.030	10.84	0.00
610	90.883	0.152	2.32	101	-1.11	96	86	-0.030	11.00	0.00
620	92.400	0.152	2.32	101	-1.69	101	84	-0.040	11.02	0.00
630	93.921	0.152	2.33	101	-1.7	101	86	-0.020	10.96	0.00

BOX B TEST DATA - ASTM E3053 / ASTM E2515

Client: FPI
Model: F5200
Run #: 2

Job #: 19-464
Tracking #: 0024
Technician: SJB
Date: 4/23/2019

	Particulate Sampling Data							Flue Gas Data		
Elapsed Time (min)	Gas Meter (ft^3)	Sample Rate (cfm)	Orifice dH (in H_2O)	Meter Temp (°F)	Meter Vacuum (in Hg)	Pro. Rate (%)	Filter (°F)	Flue Draft (in H_2O)	CO_2 (%)	CO (%)
640	95.437	0.152	2.32	101	-3.15	108	85	-0.030	10.80	0.00
650	96.957	0.152	2.32	101	-1.68	101	85	-0.030	10.84	0.00
660	98.472	0.152	2.33	100	-3.31	101	85	-0.040	10.94	0.00
670	99.992	0.152	2.33	100	-1.24	101	84	-0.020	11.07	0.00
680	101.507	0.152	2.34	100	-1.74	102	86	-0.040	11.08	0.00
690	103.026	0.152	2.33	100	-3.41	96	84	-0.040	11.06	0.00
700	104.544	0.152	2.33	100	-1.11	96	86	-0.040	10.99	0.00
710	106.061	0.152	2.33	100	-1.36	102	84	-0.030	11.01	0.00
720	107.579	0.152	2.33	100	-2.6	100	84	-0.040	10.94	0.00
730	109.095	0.152	2.33	99	-1.17	96	86	-0.030	10.74	0.00
740	110.613	0.152	2.33	99	-3.51	96	84	-0.030	10.54	0.00
750	112.129	0.152	2.34	99	-3.39	105	85	-0.030	10.34	0.00
760	113.647	0.152	2.34	99	-2.53	101	85	-0.030	10.24	0.00
770	115.162	0.152	2.33	99	-1.46	104	84	-0.030	10.18	0.00
780	116.680	0.152	2.35	99	-1.07	100	85	-0.040	10.45	0.02
790	118.194	0.151	2.32	98	-3.39	101	86	-0.020	10.67	0.00
800	119.712	0.152	2.34	98	-3.08	104	83	-0.030	10.85	0.00
810	121.226	0.151	2.34	98	-1.35	100	85	-0.040	10.99	0.00
820	122.744	0.152	2.33	98	-2.3	104	86	-0.040	11.12	0.00
830	124.258	0.151	2.34	98	-1.15	97	84	-0.030	11.13	0.00
840	125.775	0.152	2.33	98	-3.34	103	85	-0.030	11.22	0.00
850	127.289	0.151	2.34	98	-2.83	101	86	-0.030	11.36	0.00
860	128.806	0.152	2.34	97	-3.42	106	84	-0.040	11.18	0.00
870	130.319	0.151	2.35	97	-3.4	99	84	-0.020	10.93	0.00
880	131.836	0.152	2.33	97	-1.1	105	85	-0.030	10.81	0.01
890	133.349	0.151	2.34	97	-1.31	99	85	-0.030	10.97	0.00
900	134.866	0.152	2.34	97	-1.11	104	84	-0.030	10.66	0.00
910	136.378	0.151	2.36	97	-2.65	96	85	-0.030	10.59	0.01
920	137.895	0.152	2.34	97	-3.23	100	85	-0.030	10.29	0.00
930	139.408	0.151	2.34	97	-1.08	103	84	-0.030	10.31	0.01
940	140.925	0.152	2.34	97	-1.11	102	84	-0.030	10.27	0.02
950	142.437	0.151	2.35	97	-1.39	100	85	-0.050	10.15	0.02

BOX B TEST DATA - ASTM E3053 / ASTM E2515

Client: FPI
Model: F5200
Run #: 2

Job #: 19-464
Tracking #: 0024
Technician: SJB
Date: 4/23/2019

	Particulate Sampling Data							Flue Gas Data		
Elapsed Time (min)	Gas Meter (ft^3)	Sample Rate (cfm)	Orifice dH (in H_2O)	Meter Temp (°F)	Meter Vacuum (in Hg)	Pro. Rate (%)	Filter (°F)	Flue Draft (in H_2O)	CO_2 (%)	CO (%)
960	143.953	0.152	2.34	97	-1.03	100	84	-0.020	10.08	0.00
970	145.465	0.151	2.33	97	-1.27	100	84	-0.040	9.82	0.02
980	146.982	0.152	2.34	97	-1.22	103	85	-0.030	9.85	0.00
990	148.494	0.151	2.36	97	-0.95	105	86	-0.030	9.88	0.02
1000	150.011	0.152	2.35	97	-2.55	101	84	-0.040	9.81	0.00
1010	151.523	0.151	2.35	97	-1.73	102	84	-0.030	9.89	0.00
1020	153.039	0.152	2.34	97	-3.48	98	84	-0.030	9.67	0.00
1030	154.553	0.151	2.33	97	-1.14	102	85	-0.040	9.63	0.00
1040	156.068	0.152	2.34	97	-2.26	101	84	-0.030	9.66	0.00
1050	157.581	0.151	2.36	97	-2.42	98	84	-0.030	9.49	0.00
1060	159.096	0.152	2.31	97	-1.48	104	86	-0.030	9.30	0.01
1070	160.609	0.151	2.33	97	-1.24	101	84	-0.030	9.61	0.00
1080	162.124	0.151	2.34	97	-3.41	105	84	-0.040	9.38	0.00
1090	163.638	0.151	2.34	97	-3.3	104	86	-0.040	9.15	0.01
1100	165.152	0.151	2.34	97	-3.04	99	84	-0.030	9.19	0.00
1110	166.665	0.151	2.33	97	-2.25	95	84	-0.030	9.00	0.01
Avg/Tot	166.665	0.150	2.26	100	-2.01	100	85	-0.044	12.22	0.04

WOODSTOVE SURFACE TEMPERATURE DATA

Client: FPI
Model: F5200
Run #: 2

Job #: 19-464
Tracking #: 0024
Technician: SJB
Date: 4/23/2019

	Temperature Data (°F)						
Elapsed Time (min)	FB Left	FB Right	FB Back	FB Top	FB Bottom	Stove Surface Average	Catalyst Exit
0	429	438	400	404	372	408.6	804
10	346	376	348	516	380	393.2	982
20	315	347	322	565	376	385.0	996
30	294	322	290	568	366	368.0	1136
40	282	315	277	547	352	354.6	954
50	275	313	267	514	336	341.0	945
60	266	298	256	534	321	335.0	1096
70	260	286	251	554	307	331.6	1131
80	261	279	250	568	294	330.4	1154
90	268	278	255	576	284	332.2	1113
100	281	284	261	570	276	334.4	1090
110	287	286	263	581	268	337.0	1109
120	290	290	265	582	262	337.8	1134
130	293	293	268	582	257	338.6	1129
140	298	296	270	582	253	339.8	1120
150	301	299	272	580	250	340.4	1116
160	306	302	275	578	247	341.6	1109
170	310	303	279	568	245	341.0	1086
180	310	304	281	558	243	339.2	1074
190	311	304	281	549	242	337.4	1053
200	312	304	282	543	241	336.4	1052
210	313	304	283	548	240	337.6	1075
220	316	306	289	563	241	343.0	1120
230	322	310	297	590	241	352.0	1146
240	325	314	300	587	241	353.4	1112
250	324	318	304	584	242	354.4	1113
260	326	324	308	595	242	359.0	1133
270	330	331	313	602	243	363.8	1120
280	333	332	316	580	244	361.0	1083
290	337	335	325	601	245	368.6	1176
300	345	341	342	645	245	383.6	1221
310	356	350	360	663	246	395.0	1224
320	366	359	371	663	246	401.0	1195
330	401	389	383	634	247	410.8	1119
340	434	409	393	628	247	422.2	1137
350	463	415	404	620	248	430.0	1108
360	473	402	416	615	248	430.8	1097
370	468	389	422	584	249	422.4	998
380	455	376	416	539	251	407.4	952
390	439	365	399	513	255	394.2	925
400	431	356	382	487	259	383.0	882
410	416	347	370	467	263	372.6	863
420	403	340	362	458	266	365.8	871
430	394	337	357	464	269	364.2	909
440	389	335	355	482	271	366.4	958
450	387	337	357	508	273	372.4	1016
460	386	340	362	552	274	382.8	1094
470	387	343	365	552	275	384.4	1031

WOODSTOVE SURFACE TEMPERATURE DATA

Client: FPI
Model: F5200
Run #: 2

Job #: 19-464
Tracking #: 0024
Technician: SJB
Date: 4/23/2019

	Temperature Data (°F)						
Elapsed Time (min)	FB Left	FB Right	FB Back	FB Top	FB Bottom	Stove Surface Average	Catalyst Exit
480	385	344	365	505	275	374.8	882
490	379	342	362	444	277	360.8	776
500	373	339	359	401	279	350.2	717
510	369	337	356	376	283	344.2	682
520	366	335	355	359	286	340.2	657
530	363	333	354	347	290	337.4	633
540	360	332	351	336	293	334.4	621
550	354	329	348	329	295	331.0	610
560	350	327	344	323	297	328.2	604
570	347	326	341	319	299	326.4	598
580	345	325	338	315	301	324.8	591
590	344	324	336	312	302	323.6	586
600	344	323	336	310	303	323.2	582
610	344	323	338	307	304	323.2	577
620	343	322	338	306	305	322.8	576
630	343	321	339	305	305	322.6	580
640	342	321	341	305	305	322.8	578
650	341	321	343	304	304	322.6	576
660	340	321	344	303	302	322.0	572
670	340	320	346	302	301	321.8	572
680	340	320	343	302	300	321.0	574
690	338	318	342	303	299	320.0	576
700	338	318	340	303	299	319.6	576
710	338	317	339	302	299	319.0	573
720	338	317	339	300	300	318.8	567
730	338	316	339	298	300	318.2	562
740	335	314	334	296	300	315.8	561
750	333	312	330	295	300	314.0	559
760	330	312	326	292	298	311.6	553
770	327	311	323	290	296	309.4	549
780	326	311	323	288	295	308.6	549
790	325	313	324	288	294	308.8	553
800	325	315	325	289	292	309.2	557
810	325	319	330	291	292	311.4	562
820	325	323	337	293	291	313.8	564
830	325	327	343	294	290	315.8	567
840	327	331	349	298	289	318.8	572
850	326	334	355	299	288	320.4	573
860	326	336	359	301	287	321.8	575
870	326	337	361	301	286	322.2	568
880	325	338	362	300	285	322.0	564
890	324	340	363	299	283	321.8	564
900	322	338	364	299	282	321.0	562
910	321	336	365	298	281	320.2	558
920	319	334	366	296	280	319.0	555
930	318	333	366	294	279	318.0	552
940	317	332	360	293	278	316.0	553
950	316	329	355	292	277	313.8	552

WOODSTOVE SURFACE TEMPERATURE DATA

Client: FPI
Model: F5200
Run #: 2

Job #: 19-464
Tracking #: 0024
Technician: SJB
Date: 4/23/2019

	Temperature Data (°F)						
Elapsed Time (min)	FB Left	FB Right	FB Back	FB Top	FB Bottom	Stove Surface Average	Catalyst Exit
960	317	328	350	290	276	312.2	545
970	316	325	345	287	275	309.6	538
980	314	322	341	284	274	307.0	533
990	311	320	335	283	274	304.6	530
1000	309	319	328	282	273	302.2	537
1010	306	317	325	280	272	300.0	532
1020	304	315	322	278	271	298.0	529
1030	303	314	321	276	271	297.0	525
1040	302	313	319	274	270	295.6	520
1050	301	312	318	272	270	294.6	519
1060	299	310	317	272	269	293.4	518
1070	298	309	315	270	268	292.0	515
1080	296	309	313	269	266	290.6	517
1090	296	307	309	269	265	289.2	515
1100	296	304	304	267	264	287.0	511
1110	296	302	301	265	263	285.4	505
Average	337	327	332	415	280	338	784

LAB SAMPLE DATA - ASTM E2515

Client: FPI
Model: F5200
Run #: 2

Job #: 19-464
Tracking #: 0024
Technician: SJB
Date: 4/23/2019

TRAIN A (1st Hour)

Sample Component	Sample Type	Filter, Probe, or O-Ring #	Weights		
			Final, mg	Tare, mg	Particulate, mg
A. Front filter catch	Filter	T169	90.1	88.4	1.7
B. Rear filter catch	Filter				0.0
C. Probe catch*	Probe				0.0
D. O-Ring catch*	O-Ring				0.0

Sub-Total	Total Particulate, mg:	1.7

TRAIN A (Post 1st hour)

Sample Component	Sample Type	Filter, Probe, or O-Ring #	Weights		
			Final, mg	Tare, mg	Particulate, mg
A. Front filter catch	Filter	T170/T176	267.8	176.4	3.2
B. Rear filter catch	Filter	T171		88.2	
C. Probe catch*	Probe	5A	116769.5	116769.7	0.0
D. O-Ring catch*	O-Ring	5A	3530.3	3529.9	0.4

Sub-Total	Total Particulate, mg:	3.6
Train A Aggregate	Total Particulate, mg:	**5.3**

TRAIN B

Sample Component	Reagent	Filter, Probe, or O-Ring #	Weights		
			Final, mg	Tare, mg	Particulate, mg
A. Front filter catch	Filter	T172/T175	270.0	176.6	4.9
B. Rear filter catch	Filter	T173		88.5	
C. Probe catch*	Probe	5B	116877.3	116877.4	0.0
D. O-Ring catch*	O-Ring	5B	3527.0	3526.8	0.2

Total Particulate, mg:	**5.1**

AMBIENT

Sample Component	Reagent	Filter, Probe, or O-Ring #	Weights		
			Final, mg	Tare, mg	Particulate, mg
A. Filter catch*	Filter	T174	87.8	87.7	0.1

Total Particulate, mg:	**0.1**

*Particulate catch that results in a negative number, is assumed to be zero for probes and O-rings, negative numbers for filters are assumed to be part of the O-Ring weight.

ASTM E3053 Wood Heater Run Sheets

Client: FPI Job Number: 19-464 Tracking #: 0024
Model: F5200 Run Number: 2 Test Date: 4/23/2019

Wood Heater Run Notes

Pre-Test Notes
Pre-Test Start Time: 9:36
Air Control Setting: Fully Open

Time	Notes
N/A	Low fire test was performed as a continuation of the Run 1 High Fire Test, See Run 1 Notes for further detail

Test Notes
Test Burn Start Time: 15:23
Air Control Setting: Fully Closed

Time	Notes
0 min	Leveled coal bed from high fire test, turned off fan, zeroed scale, loaded test fuel, door closed at 40 seconds.
10 min	Slowly started closing air down to low test setting (fully closed)
15 min	Air set to test setting
20 min	Fan turned on to low (20 minutes after fuel loading, per manufacturer's instructions)
60 min	Changed 1st hour filter
120 min	Changed front train B filter
130 min	Changed front train A filter
1100 min	End of test

Test Burn End Time: 9:53

Flue Gas Concentration Measurement

Calibration Gas Values: Span Gas CO_2 (%): 16.93 CO (%): 4.330
Mid Gas CO_2 (%): 10.00 CO (%): 2.51

Calibration Results:

	Pre Test			Post Test		
	Zero	Mid	Span	Zero	Mid	Span
Time	8:46	8:51	8:49	4/24 – 10:20	4/24 – 10:20	4/24 – 10:20
CO_2	0.00	10.09	16.93	-0.02	10.04	16.94
CO	0.000	2.497	4.330	-0.036	2.441	4.265

Flue Gas Probe Leak Check: Initial: No Leakage Final: No Leakage

Technician Signature: Date: 4/24/2019

ASTM E3053 Wood Heater Run Sheets

Client: FPI Job Number: 19-464 Tracking #: 0024
Model: F5200 Run Number: 2 Test Date: 4/23/2019

Test Photos

Kindling Fuel Load

Start-up Fuel Load

High Fire Fuel Load

Residual Start-up Fuel Coal Bed

Technician Signature: Date: 4/24/2019

ASTM E3053 Wood Heater Run Sheets

Client: FPI Job Number: 19-464 Tracking #: 0024
Model: F5200 Run Number: 2 Test Date: 4/23/2019

High Fire Fuel Loaded

Residual High Fire Load Coal Bed

Low Fire Fuel Load

Low Fire Fuel Loaded

Technician Signature: Date: 4/24/2019

WOOD STOVE TEST DATA PACKET
ASTM E3053/E2515

Run 3 Data Summary

Client: FPI
Model: F5200
Job #: 19-464
Tracking #: 0024
Test Date: 4/25/2019

4/30/2019

Techician Signature | Date

TEST RESULTS - ASTM E3053 / ASTM E2515

Client: FPI
Model: F5200
Run #: 3

Job #: 19-464
Tracking #: 0024
Technician: SJB
Date: 4/25/2019

Burn Rate (kg/hr):	1.35

	Ambient Sample	Sample Train A	Sample Train B	1st Hour Filter
Total Sample Volume (ft^3)	98.752	127.379	126.146	8.733
Average Gas Velocity in Dilution Tunnel (ft/sec)	17.31			
Average Gas Flow Rate in Dilution Tunnel (dscf/hr)	11518.5			
Average Gas Meter Temperature (°F)	73.7	98.7	97.6	74.9
Total Sample Volume (dscf)	97.630	121.566	120.123	10.250
Average Tunnel Temperature (°F)	89.6			
Total Time of Test (min)	850			
Total Particulate Catch (mg)	0.1	6.3	5.8	2.0
Particulate Concentration, dry-standard (g/dscf)	0.0000010	0.0000518	0.0000483	0.0001951
Total PM Emissions (g)	0.17	8.29	7.71	2.24
Particulate Emission Rate (g/hr)	0.01	0.59	0.54	2.24
Emissions Factor (g/kg)	-	0.43	0.40	-
Difference from Average Total Particulate Emissions (g)	-	0.29	0.29	-
Difference from Average Emissions Factor (g/kg)	-	0.02	0.02	-

Final Average Results	
Total Particulate Emissions (g)	8.00
Particulate Emission Rate (g/hr)	0.56
Emissions Factor (g/kg)	0.42
HHV Efficiency (%)	79.9%
LHV Efficiency (%)	85.5%
CO Emissions (g/min)	0.36

Quality Checks	Requirement	Observed	Result
Dual Train Precision	Each train within 7.5% of average emissions (in grams), or emission factors within 0.5 g/kg	See Above	OK
Filter Temps	>80 °F, <90 °F	Min: 81 / Max: 87	OK
Face Velocity	< 30 ft/min	8.1	OK
Leakage Rate	Less than 4% of average sample rate	0 cfm	OK
Ambient Temp	55-90 °F	Min: 66 / Max: 76	OK
Negative Probe Weight Evaluation	<5% of Total Catch	Probe Catch Not Negative	OK
Pro-Rate Variation	90% of readings between 90-110%; none greater than 120% or less than 80%	See Data Tabs	OK

B415.1 Efficiency Results

Manufacturer:	FPI
Model:	F5200
Date:	04/25/19
Run:	3
Control #:	19-464
Test Duration:	850
Output Category:	Medium

Test Results in Accordance with CSA B415.1-09

	HHV Basis	LHV Basis
Overall Efficiency	79.9%	85.5%
Combustion Efficiency	99.0%	99.0%
Heat Transfer Efficiency	80.7%	86.3%

Output Rate (kJ/h)	21,611	20,501	**(Btu/h)**
Burn Rate (kg/h)	1.35	2.99	**(lb/h)**
Input (kJ/h)	27,036	25,646	**(Btu/h)**

Test Load Weight (dry kg)	19.19	42.29	**dry lb**
MC wet (%)	18.51		
MC dry (%)	22.72		
Particulate (g)	8.00		
CO (g)	302		
Test Duration (h)	14.17		

Emissions	Particulate	CO
g/MJ Output	0.03	0.99
g/kg Dry Fuel	0.42	15.73
g/h	0.56	21.31
g/min	0.01	0.36
lb/MM Btu Output	0.06	2.29

Air/Fuel Ratio (A/F)	10.42

VERSION: **2.2** **12/14/2009**

HIGH FIRE FUEL LOAD DATA - ASTM E3053

Client:	FPI	Job #:	19-464
Model:	F5200	Tracking #	0024
Run #:	3	Technician:	SJB
		Date:	4/25/2019

Nominal Loading Density (lbs/ft^3, wet basis):	10		
Usable Firebox Volume (ft^3):	4.42		
Target Load Weight (lbs):	44.20		
Total Load Weight Range (lbs):	42.00	to	46.40
Core Load Weight Range (lbs):	19.90	to	28.70
Remainder Load Weight Range (lbs):	15.50	to	24.30
Core Load Piece Range (lbs):	6.60	to	11.10
Remainder Load Piece Range (lbs):	4.40	to	24.30
Max Allowable Kindling Weight (lbs):	8.61		
Max Allowable Start-up Fuel Weight (lbs):	12.92		

CORE LOAD DATA

				Fuel Piece Moisture Readings (%DB)					Dry Weight	
Piece #	Length (in)	Weight (lbs)	Within Spec?	1	2	3	Ave.	Within Spec?	lbs	kg
1	20.00	8.84	In Range	25.4	27.6	22.9	25.3	In Range	7.06	3.20
2	20.00	8.38	In Range	28.4	22.6	24.1	25.0	In Range	6.70	3.04
3	20.00	10.10	In Range	23.7	24.3	25.0	24.3	In Range	8.12	3.68
Core Load Wt. (lbs)		27.32	In Range							

REMAINDER LOAD DATA (1 to 3 Pieces)

				Fuel Piece Moisture Readings (%DB)					Dry Weight	
Piece #	Length (in)	Weight (lbs)	Within Spec?	1	2	3	Ave.	Within Spec?	lbs	kg
1	20.00	8.05	In Range	19.3	27.4	24.2	23.6	In Range	6.51	2.95
2	20.00	7.69	In Range	18.7	24.8	23.6	22.4	In Range	6.28	2.85
3			NA				NA	NA	NA	NA
Remainder Load (lbs)		15.74	In Range							

Total Load Weight (lbs):	43.06	In Range	
Core Load % of Total Weight:	63%	In Range	45-65%
Remainder % of Total Weight:	37%	In Range	35-55%
Total Load % of Target Weight:	97%	In Range	95-105%
Actual Fuel Loading Density (lb/ft3):	9.7		
Total Load Average Moisture Content (%DB):	24.2	In Range	19-25%
Total Load Average Moisture Content (%WB):	19.5		
Total Test Load Weight (dry basis):	34.68 lbs	15.73 kg	

KINDLING AND START-UP FUEL

		Kindling Moisture Readings (%DB)					Dry Weight	
Kindling Weight (lbs)	Within Spec?	1	2	3	Avg.	Within Spec?	lbs	kg
6.18	In Range	10	10	10	10.0	In Range	5.62	2.55

		Start-up Moisture Readings (%DB)					Dry Weight	
Start-up Fuel Wt. (lb)	Within Spec?	1	2	3	Avg.	Within Spec?	lbs	kg
9.15	In Range	18.7	19.4	19.3	19.1	In Range	7.68	3.48

TEST FUEL LOADING RANGE

Allowable Residual Start-up Fuel Range (lb):	4.3	to	8.6	
Actual Residual Start-up Fuel Weight (lb):		4.4		In Range

LOW & MEDIUM FIRE FUEL LOAD DATA - ASTM E3053

Client:	FPI	Job #:	19-464
Model:	F5200	Tracking #	0024
Run #:	3	Technician:	SJB
		Date:	4/25/2019

Nominal Loading Density (lbs/ft^3, wet basis):	12		
Usable Firebox Volume (ft^3):	4.42		
Target Load Weight (lbs):	53.04		
Total Load Weight Range (lbs):	50.39	to	55.69
Core Load Weight Range (lbs):	23.87	to	34.48
Remainder Load Weight Range (lbs):	18.56	to	29.17
Core Load Piece Range (lbs):	7.96	to	13.26
Remainder Load Piece Range (lbs):	5.30	to	10.61

CORE LOAD DATA

				Fuel Piece Moisture Readings (%DB)					Dry Weight	
Piece #	Length (in)	Weight (lbs)	Within Spec?	1	2	3	Ave.	Within Spec?	lbs	kg
1	20.00	9.06	In Range	24.2	25.4	23.9	24.5	In Range	7.28	3.30
2	20.00	8.33	In Range	28.6	22.4	19.6	23.5	In Range	6.74	3.06
3	20.00	9.39	In Range	19.3	24.9	18.3	20.8	In Range	7.77	3.52
Core Load Wt. (lbs)		26.78	In Range							

REMAINDER LOAD DATA (3 to 4 Pieces)

				Fuel Piece Moisture Readings (%DB)					Dry Weight	
Piece #	Length (in)	Weight (lbs)	Within Spec?	1	2	3	Ave.	Within Spec?	lbs	kg
1	20.00	7.61	In Range	22.9	25.0	20.4	22.8	In Range	6.20	2.81
2	20.00	6.97	In Range	19.6	18.1	28.4	22.0	In Range	5.71	2.59
3	20.00	10.56	In Range	20.0	28.4	19.7	22.7	In Range	8.61	3.90
4			NA				NA	NA	NA	NA
Remainder Load (lbs)		25.14	In Range							

Remainder Load Small/Large Piece Weight Ratio:	66%	In Range	≤ 67%
Total Load Weight (lbs):	51.92	In Range	
Core Load % of Total Weight:	52%	In Range	45-65%
Remainder % of Total Weight:	48%	In Range	35-55%
Total Load % of Target Weight:	98%	In Range	95-105%
Actual Fuel Loading Density (lb/ft3):	11.7		
Total Load Average Moisture Content (%DB):	22.7	In Range	19-25%
Total Load Average Moisture Content (%WB):	18.5		
Total Test Load Weight (dry basis):	42.31 lbs	19.19 kg	

TEST FUEL LOADING RANGE

Allowable Charcoal Bed Weight Range (lb):	5.2	to	10.3
Actual Charcoal Bed Wt. (lb):	8.9	In Range	

TEST END POINT

Actual Fuel Load Ending Weight (lb):	0.0	Valid Test (≥90%)

Total Fuel Burned During Test Run:	51.9	lbs, wet basis
	42.3	lbs, dry basis
	19.19	kg, dry basis

DILUTION TUNNEL & MISC. DATA - ASTM E3053 / E2515

Client:	FPI	Job #:	19-464
Model:	F5200	Tracking #:	0024
Run #:	3	Technician:	SJB
Test Start Time:	10:59	Date:	4/25/2019
Test Type:	Medium Fire		

Recording Interval (min):	10
Total Sampling Time (min):	850

	Pre-Test	Post Test	Avg.
Barometric Pressure (in. Hg)	29.93	29.95	29.94
Relative Humidity (%)	32.6	26.7	
Room Air Velocity (ft/min)	0	0	
Scale Audit (lbs)	10.0	10.0	
Ambient Sample Volume:		98.752	ft^3

Meter Box γ Factor:	1.004	(A)
Meter Box γ Factor:	1.000	(B)
Meter Box γ Factor:	0.999	(Ambient)

Induced Draft Check (in. H_2O):	0
Smoke Capture Check (%):	100%
Date Flue Pipe Last Cleaned:	4/23/2019

Sample Train Post-Test Leak Checks

(A)	0.000	cfm @	-13	in. Hg
(B)	0.000	cfm @	-18	in. Hg
(Ambient)	0.002	cfm @	-14	in. Hg

DILUTION TUNNEL FLOW

Traverse Data

Point	dP (in H_2O)	Temp (°F)
1	0.050	103
2	0.068	103
3	0.070	103
4	0.050	103
5	0.056	103
6	0.066	103
7	0.070	103
8	0.060	103
Center	0.064	103

Static Pressure: -0.210 in. H_2O

Dilution Tunnel H_2O:	2.00	percent
Tunnel Diameter:	6	inches
Pitot Tube Cp:	0.99	[unitless]
Dilution Tunnel MW(dry):	29.00	lb/lb-mole
Dilution Tunnel MW(wet):	28.78	lb/lb-mole
Tunnel Area:	0.1963	ft^2
V_{strav}:	16.95	ft/sec
V_{scent}:	17.31	ft/sec
F_p:	0.979	[ratio]
Initial Tunnel Flow:	183.0	scf/min

TEST FUEL PROPERTIES

ASTM 3053-17 - Table A1.1 Fuel Properties by Fuel Species

Select Fuel Type	Species	%C	%H	%O	%Ash	MJ/kg	BTU/lb
	Ash, White	49.70	6.90	43.00	0.30	20.75	8927
	Beech	48.70	5.80	44.70	0.60	18.80	8088
	Birch, Sweet	49.80	6.50	43.40	0.30	20.12	8656
	Birch, Yellow	49.80	6.50	43.40	0.30	20.12	8656
	Doug Fir (Coast, Interior West/North)	48.73	6.87	43.90	0.50	19.81	8522
	Doug Fir (Interioir South)	48.73	6.87	43.90	0.50	19.81	8522
	Elm, Rock	50.40	6.60	42.30	0.70	20.49	8815
	Elm, Soft	50.40	6.60	42.30	0.70	20.49	8815
	Gum, Red	50.88	6.06	41.57	1.28	19.72	8478
	Larch, Western	50.54	6.36	42.40	0.70	17.58	7558
X	Maple, Hard	50.64	6.02	41.74	1.35	19.96	8587
	Maple, Sugar	50.64	6.02	41.74	1.35	19.96	8587
	Oak, Red	49.50	6.62	43.70	0.20	20.20	8690
	Oak, White	50.40	6.59	42.70	0.20	20.50	8819
	Pine, Southern	52.60	7.00	40.10	1.31	22.30	9587
	Pine, Southern Long Leaf	52.60	7.02	40.10	1.30	22.30	9594
	Other						

WOODSTOVE PREBURN DATA

Client: FPI
Model: F5200
Run #: 3

Job #: 19-464
Tracking #: 0024
Technician: SJB
Date: 4/25/2019

Recording Interval (min): 10
Run Time (min): 280

			Temperatures (°F)							
Elapsed Time (min)	Scale Reading (lbs)	Flue Draft (in H_2O)	FB Left	FB Right	FB Back	FB Top	FB Bottom	Stove Surface Average	Flue	Ambient
0	4.0	-0.005	65	65	65	65	65	65.0	65	65
10	3.3	-0.079	216	215	204	274	74	196.6	440	64
20	2.1	-0.055	261	247	244	425	111	257.6	417	64
30	9.1	-0.075	346	310	313	511	148	325.6	522	64
40	6.7	-0.073	418	361	355	636	179	389.8	553	64
50	4.5	-0.085	513	462	439	678	203	459.0	558	65
60	45.1	-0.097	504	426	434	705	229	459.6	587	65
70	42.8	-0.075	436	397	394	667	250	428.8	568	66
80	40.8	-0.086	409	379	338	590	262	395.6	553	66
90	38.5	-0.086	397	368	315	577	271	385.6	551	67
100	36.4	-0.069	400	367	307	579	280	386.6	548	67
110	34.0	-0.103	412	369	306	583	290	392.0	554	67
120	31.8	-0.079	430	374	314	569	300	397.4	540	67
130	29.8	-0.072	447	383	326	568	308	406.4	538	66
140	27.7	-0.083	478	396	346	581	317	423.6	543	66
150	25.6	-0.084	502	412	358	595	326	438.6	550	65
160	23.4	-0.104	546	431	378	626	333	462.8	560	65
170	21.2	-0.097	584	463	410	647	339	488.6	567	64
180	19.1	-0.081	611	489	438	640	340	503.6	558	64
190	17.2	-0.077	622	506	473	640	338	515.8	551	62
200	15.9	-0.081	592	515	483	609	337	507.2	525	60
210	14.8	-0.081	565	503	474	552	335	485.8	488	58
220	13.9	-0.083	537	491	469	531	334	472.4	482	57
230	12.9	-0.066	521	482	469	510	334	463.2	468	56
240	11.9	-0.073	525	492	485	519	336	471.4	476	55
250	10.8	-0.088	525	498	493	546	340	480.4	485	55
260	10.0	-0.076	516	499	484	515	345	471.8	466	55
270	9.5	-0.079	495	483	446	481	349	450.8	450	55
280	8.9	-0.073	483	489	430	441	353	439.2	417	56

BOX A TEST DATA - ASTM E3053 / ASTM E2515

Client: FPI
Model: F5200
Run #: 3

Job #: 19-464
Tracking #: 0024
Technician: SJB
Date: 4/25/2019

	Particulate Sampling Data							Fuel Weight (lb)		Temperature Data (°F)			
Elapsed Time (min)	Gas Meter (ft^3)	Sample Rate (cfm)	Dilution Tunnel dP (in H_2O)	Orifice dH (in H_2O)	Meter Temp (°F)	Meter Vacuum (in Hg)	Pro. Rate (%)	Scale Reading	Weight Change	Dilution Tunnel	Flue	Filter	Ambient
0	0.075		0.071	0.01	67	-0.07		51.9		120	477	81	66
10	1.475	0.140	0.067	2.32	68	0	101	50.0	-1.9	106	510	83	67
20	2.937	0.146	0.067	2.30	71	-2.66	104	49.0	-1	94	390	81	67
30	4.392	0.146	0.076	2.23	75	-0.23	96	47.8	-1.2	90	414	82	67
40	5.852	0.146	0.065	2.32	78	-1.39	104	46.5	-1.3	89	401	82	67
50	7.335	0.148	0.070	2.29	81	-1.56	101	45.3	-1.2	89	401	82	67
60	8.808	0.147	0.069	2.23	84	-1.74	101	44.1	-1.2	90	408	83	68
70	10.276	0.147	0.063	2.26	86	-1.64	105	42.8	-1.3	91	427	82	67
80	11.752	0.148	0.064	2.22	88	-0.14	104	41.5	-1.3	92	436	82	68
90	13.234	0.148	0.064	2.25	89	-2.78	104	39.8	-1.7	93	444	82	69
100	14.711	0.148	0.075	2.22	90	-2.36	96	38.5	-1.3	91	412	83	69
110	16.183	0.147	0.067	2.22	91	-2.75	101	37.4	-1.1	90	386	82	69
120	17.654	0.147	0.066	2.19	92	-1.1	101	36.3	-1.1	91	406	82	69
130	19.144	0.149	0.071	2.31	93	-0.46	99	35.1	-1.2	92	429	83	69
140	20.659	0.152	0.076	2.33	93	-2.75	97	33.8	-1.3	94	439	82	70
150	22.166	0.151	0.064	2.31	94	-0.87	105	32.4	-1.4	94	446	82	70
160	23.676	0.151	0.069	2.32	94	-0.17	102	30.8	-1.6	96	460	83	70
170	25.180	0.150	0.062	2.31	95	-1.88	107	29.6	-1.2	96	461	82	71
180	26.684	0.150	0.065	2.29	95	-0.38	104	28.2	-1.4	97	466	83	71
190	28.188	0.150	0.063	2.29	96	-0.13	106	26.9	-1.3	98	468	83	72
200	29.686	0.150	0.062	2.27	96	-0.43	106	25.3	-1.6	98	469	83	72
210	31.182	0.150	0.071	2.25	97	-2.9	99	23.9	-1.4	99	459	83	73
220	32.679	0.150	0.072	2.26	97	-2.91	98	22.3	-1.6	97	440	83	73
230	34.169	0.149	0.065	2.25	97	-1.42	103	21.0	-1.3	97	427	83	74
240	35.656	0.149	0.071	2.22	98	-0.29	98	19.8	-1.2	97	427	83	74
250	37.144	0.149	0.066	2.26	98	-2.21	102	18.7	-1.1	96	425	83	74
260	38.633	0.149	0.066	2.19	98	-3.01	102	17.8	-0.9	95	415	84	74
270	40.132	0.150	0.073	2.29	99	-2.32	97	17.0	-0.8	94	389	82	74
280	41.638	0.151	0.071	2.28	99	-2.05	99	16.4	-0.6	93	374	83	74
290	43.146	0.151	0.067	2.27	99	-0.84	102	15.6	-0.8	93	367	83	75
300	44.648	0.150	0.064	2.30	100	-0.36	104	15.0	-0.6	93	358	84	75
310	46.156	0.151	0.073	2.27	100	-2.15	97	14.3	-0.7	92	360	84	75
320	47.659	0.150	0.069	2.27	101	-2.83	100	13.7	-0.6	92	357	83	75

BOX A TEST DATA - ASTM E3053 / ASTM E2515

Client: FPI
Model: F5200
Run #: 3

Job #: 19-464
Tracking #: 0024
Technician: SJB
Date: 4/25/2019

	Particulate Sampling Data							Fuel Weight (lb)		Temperature Data (°F)			
Elapsed Time (min)	Gas Meter (ft^3)	Sample Rate (cfm)	Dilution Tunnel dP (in H_2O)	Orifice dH (in H_2O)	Meter Temp (°F)	Meter Vacuum (in Hg)	Pro. Rate (%)	Scale Reading	Weight Change	Dilution Tunnel	Flue	Filter	Ambient
330	49.163	0.150	0.072	2.27	101	-1.04	98	12.8	-0.9	93	373	84	75
340	50.669	0.151	0.071	2.28	101	-0.38	99	12.2	-0.6	93	375	83	75
350	52.170	0.150	0.075	2.25	101	-1.39	96	11.5	-0.7	93	368	84	76
360	53.676	0.151	0.069	2.24	102	-0.42	100	10.9	-0.6	93	356	84	75
370	55.180	0.150	0.071	2.25	102	-1.7	98	10.4	-0.5	92	338	83	75
380	56.681	0.150	0.067	2.26	102	-0.58	101	9.9	-0.5	91	324	84	75
390	58.185	0.150	0.071	2.24	102	-0.65	98	9.4	-0.5	91	314	83	75
400	59.685	0.150	0.069	2.24	102	-3.03	99	9.0	-0.4	90	311	83	75
410	61.184	0.150	0.075	2.25	102	-0.34	95	8.6	-0.4	90	318	84	75
420	62.686	0.150	0.073	2.25	102	-1.61	96	8.2	-0.4	90	308	83	75
430	64.185	0.150	0.070	2.24	102	-1.08	98	7.7	-0.5	89	293	83	75
440	65.685	0.150	0.067	2.26	102	-0.56	100	7.6	-0.1	88	279	83	75
450	67.188	0.150	0.063	2.23	102	-3.12	104	7.4	-0.2	88	265	83	75
460	68.685	0.150	0.072	2.24	102	-1.16	97	7.2	-0.2	88	255	84	76
470	70.187	0.150	0.064	2.23	103	-2.87	103	7.0	-0.2	87	249	83	76
480	71.690	0.150	0.074	2.23	103	-3.1	95	6.8	-0.2	87	243	84	76
490	73.187	0.150	0.077	2.24	103	-2.25	93	6.5	-0.3	87	238	83	76
500	74.693	0.151	0.061	2.23	103	-3.03	105	6.4	-0.1	87	235	84	76
510	76.193	0.150	0.065	2.25	104	-2.34	101	6.2	-0.2	86	232	84	76
520	77.695	0.150	0.069	2.24	104	-3.04	99	6.0	-0.2	86	233	83	76
530	79.200	0.151	0.071	2.23	104	-2.09	97	5.9	-0.1	86	230	84	76
540	80.701	0.150	0.067	2.23	104	-1.84	100	5.7	-0.2	86	231	83	76
550	82.203	0.150	0.063	2.25	104	-0.38	103	5.5	-0.2	86	231	84	76
560	83.710	0.151	0.068	2.24	104	-0.78	100	5.3	-0.2	86	233	84	76
570	85.211	0.150	0.072	2.23	104	-2.8	96	5.1	-0.2	86	232	83	76
580	86.719	0.151	0.074	2.25	104	-0.9	96	4.9	-0.2	86	230	84	76
590	88.223	0.150	0.068	2.25	105	-0.45	99	4.7	-0.2	85	229	83	76
600	89.727	0.150	0.068	2.26	105	-2.98	99	4.5	-0.2	85	229	84	76
610	91.235	0.151	0.064	2.23	105	-0.42	102	4.3	-0.2	85	229	84	76
620	92.738	0.150	0.067	2.25	105	-0.62	100	4.2	-0.1	85	227	83	76
630	94.246	0.151	0.070	2.25	105	-2.07	98	4.0	-0.2	85	225	84	76
640	95.750	0.150	0.078	2.23	105	-1.57	93	3.9	-0.1	85	222	83	76
650	97.256	0.151	0.068	2.23	105	-2.87	99	3.7	-0.2	85	222	84	76

BOX A TEST DATA - ASTM E3053 / ASTM E2515

Client: FPI
Model: F5200
Run #: 3

Job #: 19-464
Tracking #: 0024
Technician: SJB
Date: 4/25/2019

	Particulate Sampling Data							Fuel Weight (lb)		Temperature Data (°F)			
Elapsed Time (min)	Gas Meter (ft^3)	Sample Rate (cfm)	Dilution Tunnel dP (in H_2O)	Orifice dH (in H_2O)	Meter Temp (°F)	Meter Vacuum (in Hg)	Pro. Rate (%)	Scale Reading	Weight Change	Dilution Tunnel	Flue	Filter	Ambient
660	98.764	0.151	0.072	2.25	105	-0.39	97	3.5	-0.2	85	221	83	76
670	100.268	0.150	0.064	2.24	104	-0.37	102	3.4	-0.1	84	220	83	76
680	101.776	0.151	0.072	2.26	104	-0.46	97	3.2	-0.2	84	220	84	76
690	103.281	0.151	0.068	2.25	104	-2.98	99	3.0	-0.2	84	221	83	76
700	104.789	0.151	0.068	2.24	104	-1.1	99	2.8	-0.2	84	223	83	76
710	106.295	0.151	0.067	2.25	104	-0.68	100	2.6	-0.2	84	225	83	75
720	107.801	0.151	0.071	2.24	104	-0.38	97	2.4	-0.2	84	227	83	75
730	109.309	0.151	0.072	2.26	104	-0.52	97	2.2	-0.2	84	230	83	75
740	110.812	0.150	0.066	2.25	104	-0.63	101	1.9	-0.3	84	233	83	75
750	112.321	0.151	0.064	2.25	104	-2.22	103	1.8	-0.1	84	233	83	75
760	113.826	0.151	0.063	2.24	104	-0.52	103	1.7	-0.1	84	234	83	75
770	115.332	0.151	0.064	2.27	104	-1.98	102	1.4	-0.3	84	234	83	75
780	116.840	0.151	0.064	2.26	104	-3.13	103	1.3	-0.1	84	236	83	75
790	118.343	0.150	0.062	2.24	104	-2.49	104	1.1	-0.2	84	236	83	75
800	119.851	0.151	0.069	2.25	104	-2.98	99	0.9	-0.2	84	235	84	75
810	121.356	0.151	0.066	2.25	104	-0.39	101	0.7	-0.2	84	235	83	75
820	122.862	0.151	0.067	2.25	104	-3.1	100	0.5	-0.2	84	234	83	75
830	124.369	0.151	0.068	2.25	104	-3	99	0.4	-0.1	84	232	83	75
840	125.872	0.150	0.067	2.24	104	-0.81	100	0.2	-0.2	83	232	83	75
850	127.379	0.151	0.075	2.27	104	-3.14	95	0.0	-0.2	83	229	84	75
Avg/Tot	127.379	0.150	0.068	2.23	99	-1.55	100			90	319	83	73.7

BOX B TEST DATA - ASTM E3053 / ASTM E2515

Client: FPI
Model: F5200
Run #: 3

Job #: 19-464
Tracking #: 0024
Technician: SJB
Date: 4/25/2019

	Particulate Sampling Data							Flue Gas Data		
Elapsed Time (min)	Gas Meter (ft^3)	Sample Rate (cfm)	Orifice dH (in H_2O)	Meter Temp (°F)	Meter Vacuum (in Hg)	Pro. Rate (%)	Filter (°F)	Flue Draft (in H_2O)	CO_2 (%)	CO (%)
0	0.001		0.00	66	-1		86	0.000	6.62	0.17
10	1.404	0.140	2.26	67	-0.65	103	85	-0.080	12.97	0.12
20	2.852	0.145	2.23	70	-3.14	104	85	-0.070	10.25	0.10
30	4.290	0.144	2.21	74	-1.73	96	85	-0.060	14.69	0.12
40	5.737	0.145	2.29	77	-3.17	104	86	-0.070	14.78	0.06
50	7.208	0.147	2.29	80	-0.89	101	86	-0.070	12.73	0.08
60	8.676	0.147	2.25	82	-0.82	101	84	-0.080	13.34	0.10
70	10.132	0.146	2.16	85	-0.91	105	85	-0.070	14.54	0.07
80	11.601	0.147	2.21	86	-1.82	105	86	-0.070	15.07	0.09
90	13.064	0.146	2.30	88	-3.95	104	86	-0.080	16.72	0.08
100	14.539	0.148	2.24	89	-4.23	97	85	-0.070	11.95	0.07
110	16.008	0.147	2.19	90	-2.31	101	84	-0.070	11.98	0.08
120	17.472	0.146	2.19	91	-2.6	102	86	-0.070	14.44	0.06
130	18.950	0.148	2.30	91	-2.53	99	86	-0.080	15.99	0.07
140	20.447	0.150	2.29	92	-4.44	97	85	-0.070	16.00	0.04
150	21.941	0.149	2.28	93	-2.38	105	84	-0.070	16.71	0.04
160	23.429	0.149	2.26	93	-3.36	101	86	-0.070	17.60	0.12
170	24.915	0.149	2.25	94	-3.37	106	86	-0.080	17.05	0.06
180	26.400	0.149	2.24	94	-4.55	104	85	-0.070	17.67	0.50
190	27.884	0.148	2.23	94	-4.2	106	85	-0.060	17.71	0.62
200	29.364	0.148	2.22	95	-2.54	106	86	-0.070	17.10	1.67
210	30.839	0.148	2.19	95	-2.78	99	86	-0.080	17.11	2.34
220	32.310	0.147	2.23	96	-4.82	98	85	-0.080	17.06	1.35
230	33.791	0.148	2.22	96	-2.78	103	85	-0.070	16.91	0.38
240	35.267	0.148	2.20	97	-4.41	98	86	-0.070	16.28	0.04
250	36.745	0.148	2.20	97	-4.84	102	84	-0.070	16.37	0.03
260	38.220	0.148	2.19	97	-3.84	102	85	-0.070	14.01	0.02
270	39.712	0.149	2.25	98	-3.57	98	85	-0.060	12.40	0.03
280	41.205	0.149	2.23	98	-4.49	99	85	-0.060	12.70	0.00
290	42.696	0.149	2.24	98	-2.85	102	86	-0.050	12.63	0.01
300	44.187	0.149	2.24	99	-2.96	104	85	-0.070	13.03	0.01
310	45.680	0.149	2.23	99	-3.35	97	85	-0.050	12.82	0.00

BOX B TEST DATA - ASTM E3053 / ASTM E2515

Client: FPI
Model: F5200
Run #: 3

Job #: 19-464
Tracking #: 0024
Technician: SJB
Date: 4/25/2019

	Particulate Sampling Data							Flue Gas Data		
Elapsed Time (min)	Gas Meter (ft^3)	Sample Rate (cfm)	Orifice dH (in H_2O)	Meter Temp (°F)	Meter Vacuum (in Hg)	Pro. Rate (%)	Filter (°F)	Flue Draft (in H_2O)	CO_2 (%)	CO (%)
320	47.169	0.149	2.24	99	-3.69	100	86	-0.040	13.14	0.02
330	48.656	0.149	2.22	100	-3.49	98	85	-0.060	15.44	0.14
340	50.143	0.149	2.22	100	-4.91	98	86	-0.060	13.16	0.04
350	51.632	0.149	2.21	100	-4.51	96	85	-0.060	12.93	0.02
360	53.119	0.149	2.21	100	-3.03	100	85	-0.040	11.77	0.00
370	54.605	0.149	2.22	101	-2.97	98	86	-0.070	11.61	0.00
380	56.089	0.148	2.22	101	-3.05	101	84	-0.050	11.30	0.00
390	57.574	0.149	2.21	101	-3.04	98	86	-0.050	10.98	0.03
400	59.060	0.149	2.19	101	-4.7	99	85	-0.060	11.19	0.01
410	60.543	0.148	2.19	101	-5.08	95	85	-0.050	11.81	0.00
420	62.027	0.148	2.22	101	-3.16	96	86	-0.050	10.74	0.00
430	63.513	0.149	2.22	101	-3.27	98	85	-0.060	10.05	0.01
440	65.001	0.149	2.20	101	-5.11	101	85	-0.050	9.68	0.00
450	66.491	0.149	2.20	101	-3.06	104	86	-0.050	9.59	0.00
460	67.979	0.149	2.21	102	-5.01	97	85	-0.040	9.30	0.00
470	69.465	0.149	2.20	102	-4.85	102	86	-0.050	9.05	0.00
480	70.951	0.149	2.22	102	-5.22	95	84	-0.030	9.03	0.00
490	72.440	0.149	2.21	103	-5.11	93	86	-0.050	8.97	0.00
500	73.930	0.149	2.22	103	-4.63	105	85	-0.040	9.11	0.00
510	75.419	0.149	2.22	103	-3.32	102	86	-0.030	9.14	0.00
520	76.908	0.149	2.20	103	-3.52	99	84	-0.040	9.21	0.00
530	78.398	0.149	2.21	103	-3.77	97	86	-0.040	9.14	0.00
540	79.891	0.149	2.21	103	-3.46	100	84	-0.040	9.37	0.00
550	81.381	0.149	2.22	104	-3.28	103	86	-0.040	9.74	0.00
560	82.870	0.149	2.22	104	-3.96	99	84	-0.040	9.47	0.01
570	84.362	0.149	2.21	104	-3.07	97	87	-0.030	9.52	0.00
580	85.855	0.149	2.22	104	-4.75	95	85	-0.040	9.39	0.00
590	87.345	0.149	2.22	104	-3.05	99	86	-0.040	9.36	0.00
600	88.834	0.149	2.21	104	-3.55	99	85	-0.040	9.04	0.00
610	90.326	0.149	2.22	104	-4.86	102	86	-0.040	8.99	0.00
620	91.819	0.149	2.22	104	-2.9	100	85	-0.030	9.02	0.00
630	93.311	0.149	2.21	104	-3.24	98	86	-0.030	8.78	0.02

BOX B TEST DATA - ASTM E3053 / ASTM E2515

Client: FPI
Model: F5200
Run #: 3

Job #: 19-464
Tracking #: 0024
Technician: SJB
Date: 4/25/2019

	Particulate Sampling Data							Flue Gas Data		
Elapsed Time (min)	Gas Meter (ft^3)	Sample Rate (cfm)	Orifice dH (in H_2O)	Meter Temp (°F)	Meter Vacuum (in Hg)	Pro. Rate (%)	Filter (°F)	Flue Draft (in H_2O)	CO_2 (%)	CO (%)
640	94.803	0.149	2.22	104	-4.09	93	85	-0.030	8.80	0.00
650	96.297	0.149	2.22	103	-5.09	100	86	-0.020	8.76	0.00
660	97.791	0.149	2.23	103	-4	97	86	-0.040	8.86	0.00
670	99.282	0.149	2.22	103	-3.06	102	85	-0.030	8.99	0.00
680	100.774	0.149	2.22	103	-5.09	97	87	-0.040	9.13	0.00
690	102.268	0.149	2.22	103	-3.74	99	84	-0.040	9.24	0.00
700	103.760	0.149	2.23	103	-5.06	99	86	-0.040	9.47	0.00
710	105.251	0.149	2.22	103	-5.13	100	85	-0.040	9.83	0.00
720	106.742	0.149	2.22	103	-3.03	97	85	-0.030	9.69	0.00
730	108.236	0.149	2.22	103	-3.82	97	86	-0.040	9.85	0.00
740	109.728	0.149	2.22	103	-3.29	101	84	-0.040	9.66	0.00
750	111.218	0.149	2.22	103	-5	102	86	-0.040	9.67	0.00
760	112.710	0.149	2.22	103	-3.03	103	84	-0.030	9.50	0.00
770	114.205	0.150	2.21	103	-4.15	103	86	-0.040	9.51	0.00
780	115.697	0.149	2.23	103	-3.01	102	85	-0.040	9.52	0.00
790	117.188	0.149	2.22	103	-3.02	104	85	-0.040	9.45	0.00
800	118.682	0.149	2.22	103	-3.39	99	86	-0.050	9.26	0.00
810	120.176	0.149	2.23	103	-2.97	101	84	-0.050	9.31	0.00
820	121.668	0.149	2.21	103	-4.9	100	86	-0.040	9.36	0.00
830	123.160	0.149	2.23	103	-3.2	99	84	-0.040	9.35	0.00
840	124.654	0.149	2.24	103	-2.97	100	85	-0.030	8.99	0.00
850	126.146	0.149	2.22	102	-4.84	95	86	-0.030	8.93	0.00
Avg/Tot	126.146	0.148	2.20	98	-3.56	100	85	-0.051	11.64	0.10

WOODSTOVE SURFACE TEMPERATURE DATA

Client: FPI
Model: F5200
Run #: 3

Job #: 19-464
Tracking #: 0024
Technician: SJB
Date: 4/25/2019

	Temperature Data (°F)						
Elapsed Time (min)	FB Left	FB Right	FB Back	FB Top	FB Bottom	Stove Surface Average	Catalyst Exit
0	481	486	431	448	354	440.0	750
10	370	400	365	527	363	405.0	1061
20	327	353	329	536	360	381.0	947
30	302	322	292	555	351	364.4	1124
40	288	313	276	556	338	354.2	1040
50	280	308	268	559	325	348.0	1085
60	275	300	263	559	313	342.0	1118
70	273	292	261	580	303	341.8	1172
80	276	290	262	601	294	344.6	1183
90	290	299	274	618	287	353.6	1195
100	302	304	273	598	281	351.6	1036
110	301	301	271	538	275	337.2	1009
120	298	296	271	552	269	337.2	1117
130	300	299	275	602	264	348.0	1194
140	311	310	283	634	260	359.6	1211
150	321	323	292	649	258	368.6	1232
160	329	340	302	675	256	380.4	1272
170	338	355	316	690	256	391.0	1265
180	345	368	327	698	255	398.6	1295
190	355	383	338	710	255	408.2	1293
200	364	394	355	717	256	417.2	1274
210	389	427	374	695	256	428.2	1164
220	404	459	396	653	257	433.8	1111
230	410	470	408	657	258	440.6	1176
240	417	474	419	655	259	444.8	1172
250	426	478	422	636	260	444.4	1157
260	430	454	415	622	260	436.2	1109
270	414	432	401	578	262	417.4	998
280	400	412	386	551	265	402.8	984
290	394	398	376	537	268	394.6	985
300	392	388	366	548	270	392.8	1020
310	388	382	361	535	271	387.4	974
320	385	380	358	532	272	385.4	990
330	386	378	358	563	273	391.6	1105
340	388	379	364	585	274	398.0	1078
350	388	380	373	559	274	394.8	1027
360	382	378	373	532	276	388.2	956
370	380	375	373	493	277	379.6	903
380	377	375	369	465	279	373.0	860
390	373	373	364	449	281	368.0	840
400	367	370	362	441	284	364.8	853
410	362	366	360	449	285	364.4	911
420	358	370	360	440	285	362.6	821
430	356	378	363	417	285	359.8	761
440	353	378	361	393	285	354.0	700
450	349	375	358	372	286	348.0	664
460	345	371	354	356	286	342.4	638
470	341	365	348	344	285	336.6	618

WOODSTOVE SURFACE TEMPERATURE DATA

Client: FPI
Model: F5200
Run #: 3

Job #: 19-464
Tracking #: 0024
Technician: SJB
Date: 4/25/2019

	Temperature Data (°F)						
Elapsed Time (min)	FB Left	FB Right	FB Back	FB Top	FB Bottom	Stove Surface Average	Catalyst Exit
480	337	359	342	335	285	331.6	604
490	334	354	338	327	284	327.4	594
500	332	349	335	321	283	324.0	586
510	332	345	332	317	281	321.4	585
520	333	341	332	315	280	320.2	589
530	335	339	332	313	278	319.4	591
540	336	337	330	314	277	318.8	595
550	340	336	330	314	275	319.0	593
560	340	335	335	315	274	319.8	600
570	341	335	337	314	273	320.0	595
580	342	334	338	313	272	319.8	586
590	343	333	338	311	271	319.2	582
600	343	331	338	310	270	318.4	581
610	343	329	337	308	269	317.2	574
620	342	328	336	305	269	316.0	567
630	341	327	334	302	268	314.4	562
640	339	325	332	300	268	312.8	557
650	338	323	330	298	267	311.2	553
660	337	322	328	296	267	310.0	551
670	337	321	327	295	267	309.4	552
680	337	320	327	295	267	309.2	556
690	338	321	328	296	267	310.0	560
700	339	322	331	297	267	311.2	570
710	342	325	336	300	267	314.0	577
720	345	330	341	305	267	317.6	587
730	346	333	348	308	268	320.6	591
740	345	340	356	312	268	324.2	592
750	346	343	362	313	268	326.4	592
760	345	344	368	314	268	327.8	591
770	345	344	375	315	268	329.4	590
780	345	344	385	316	268	331.6	590
790	343	342	387	315	268	331.0	587
800	342	340	386	314	268	330.0	583
810	342	339	385	313	267	329.2	581
820	342	338	386	311	267	328.8	577
830	346	337	383	310	267	328.6	574
840	349	335	377	308	266	327.0	573
850	348	331	370	306	266	324.2	567
Average	349	355	345	447	277	355	831

LAB SAMPLE DATA - ASTM E2515

Client: FPI
Model: F5200
Run #: 3

Job #: 19-464
Tracking #: 0024
Technician: SJB
Date: 4/25/2019

TRAIN A (1st Hour)

Sample Component	Sample Type	Filter, Probe, or O-Ring #	Weights		
			Final, mg	Tare, mg	Particulate, mg
A. Front filter catch	Filter	T177	89.8	87.8	2.0
B. Rear filter catch	Filter				0.0
C. Probe catch*	Probe				0.0
D. O-Ring catch*	O-Ring				0.0

Sub-Total	Total Particulate, mg:	2.0

TRAIN A (Post 1st hour)

Sample Component	Sample Type	Filter, Probe, or O-Ring #	Weights		
			Final, mg	Tare, mg	Particulate, mg
A. Front filter catch	Filter	T178	179.1	87.5	3.6
B. Rear filter catch	Filter	T179		88.0	
C. Probe catch*	Probe	6A	116544.9	116544.4	0.5
D. O-Ring catch*	O-Ring	6A	3611.1	3610.9	0.2

Sub-Total	Total Particulate, mg:	4.3
Train A Aggregate	Total Particulate, mg:	**6.3**

TRAIN B

Sample Component	Reagent	Filter, Probe, or O-Ring #	Weights		
			Final, mg	Tare, mg	Particulate, mg
A. Front filter catch	Filter	T180	181.6	87.4	5.5
B. Rear filter catch	Filter	T221		88.7	
C. Probe catch*	Probe	6B	116117.6	116117.3	0.3
D. O-Ring catch*	O-Ring	6B	3385.0	3385.0	0.0

Total Particulate, mg:	**5.8**

AMBIENT

Sample Component	Reagent	Filter, Probe, or O-Ring #	Weights		
			Final, mg	Tare, mg	Particulate, mg
A. Filter catch*	Filter	T222	88.8	88.7	0.1

Total Particulate, mg:	**0.1**

*Particulate catch that results in a negative number, is assumed to be zero for probes and O-rings, negative numbers for filters are assumed to be part of the O-Ring weight.

ASTM E3053 Wood Heater Run Sheets

Client: FPI Job Number: 19-464 Tracking #: 0024
Model: F5200 Run Number: 3 Test Date: 4/25/2019

Wood Heater Run Notes

Pre-Test Notes
Pre-Test Start Time: 6:18
Air Control Setting: Fully Open

Time	Notes
0 min	Loaded 4 lbs of kindling fuel and some scrap paper, lit with propane torch for 30 seconds, door open, bypass open, fan off.
2 min	Closed bypass
6 min	Closed door
7 min	@ 1.9 lbs, added remaining kindling fuel (2.1 lbs)
20 min	@ 2.1 lbs added 2.4 lbs of start-up fuel
25 min	@ 3.7 lbs, added remaining start-up fuel (6.8 lbs)
51 min	@ 4.4 lbs, leveled coal bed, loaded high fire test fuel, door closed within 50 seconds
71 min	Turned fan on high (20 minutes after fuel loading, per manufacturer's instructions)
280 min	@ 8.9 lbs, leveled coal bed, zeroed scale, turned off fan in preparation of fuel loading

Test Notes
Test Burn Start Time: 10:59
Air Control Setting: Medium Fire Test Setting (0.23" open from fully closed)

Time	Notes
0 min	Loaded Medium Fire Test Fuel, door closed within 40 seconds. Air control set to high
10 min	Started slowly moving air control down to test setting
13 min	Air set to test setting
20 min	Turned fan on low (20 minutes after fuel loading, per manufacturer's instructions)
60 min	Changed 1st hour filter
850 min	End of Test

Test Burn End Time: 1:09

Flue Gas Concentration Measurement

Calibration Gas Values: Span Gas CO_2 (%): 16.93 CO (%): 4.330
Mid Gas CO_2 (%): 10.00 CO (%): 2.51

Calibration Results:

	Pre Test			Post Test		
	Zero	Mid	Span	Zero	Mid	Span
Time	7:13	7:17	7:15	4/26 – 8:33	4/26 – 8:35	4/26 – 8:38
CO_2	0.00	10.05	16.93	0.07	10.08	16.87
CO	0.000	2.500	4.330	-0.019	2.497	4.286

Flue Gas Probe Leak Check: Initial: No Leakage Final: No Leakage

Technician Signature: Date: 5/2/2019

ASTM E3053 Wood Heater Run Sheets

Client: FPI Job Number: 19-464 Tracking #: 0024
Model: F5200 Run Number: 3 Test Date: 4/25/2019

Test Photos

Kindling Fuel Load

Start-up Fuel Load

High Fire Fuel Load

Residual Start-up Fuel Coal Bed

Technician Signature: Date: 5/2/2019

ASTM E3053 Wood Heater Run Sheets

Client: FPI Job Number: 19-464 Tracking #: 0024
Model: F5200 Run Number: 3 Test Date: 4/25/2019

High Fire Fuel Loaded

Residual High Fire Load Coal Bed

Medium Fire Fuel Load

Medium Fire Fuel Loaded

Technician Signature: Date: 5/2/2019

Sample Pre-Test Tare Sheet: ☐ Probes ☒ TX40 Filters ☐ O-Rings

Date/Time In Desiccator: 3/7/19 - 13:00 Balance ID#: 107 Audit Weight ID# / Weight(mg): 109A-100mg

Sample ID	Date/Time	Weight (mg)	Date/Time	Weight (mg)	Date/Time	Weight (mg)	Date/Time	Weight (mg)	Tech. Initials	Project/Run #
T151	4/4-15:30	88.8	4/5-8:00	89.0	–	–	–	–	SB	19-468 #3
T152		87.9		87.8	–	–	–	–	SB	19-469 #4
T153		88.3		88.3	–	–	–	–	SB	
T154		88.1		88.1	–	–	–	–	SB	
T155		88.0		88.0	–	–	–	–	SB	
T156		87.5		87.5	–	–	–	–	SB	
T157		87.5		87.6	–	–	–	–	SB	
T158		87.4		87.6	–	–	–	–	SB	
T159		87.5		87.6	–	–	–	–	SB	
T160		87.9		87.8	–	–	–	–	SB	
T161		88.6		88.6	–	–	–	–	SB	19-464 #1
T162		88.1		87.9	–	–	–	–	SB	
T163		88.4		88.5	–	–	–	–	SB	
T164		88.9		88.9	–	–	–	–	SB	
T165		88.3		88.2	–	–	–	–	SB	
T166		88.6		88.5	–	–	–	–	SB	
T167		87.8		87.6	–	–	–	–	SB	
T168		88.5		88.5	–	–	–	–	SB	
T169		88.3		88.4	–	–	–	–	SB	19-464 #2
T170		87.8		88.0	–	–	–	–	SB	
T171		88.2		88.2	–	–	–	–	SB	
T172		88.2		88.2	–	–	–	–	SB	
T173		88.5		88.5	–	–	–	–	SB	
T174		87.6		87.7	–	–	–	–	SB	
T175		88.3		88.4	–	–	–	–	SB	
T176		88.3		88.4	–	–	–	–	SB	
T177		87.9		87.8	–	–	–	–	SB	19-464 #3
T178		87.5		87.5	–	–	–	–	SB	
T179		87.9		88.0	–	–	–	–	SB	
T180		87.4		87.4	–	–	–	–	SB	

Sample Post-Test Analysis Sheet: ☐ Probes ☒ TX40 Filters ☐ O-Rings

Balance ID#: 107 Audit Weight ID# / Weight (mg): 109A-100mg

Sample ID	Tare (mg)	Date/ Time in Desiccator	Date/ Time	Weight (mg)	Date/ Time	Weight (mg)	Date/ Time	Weight (mg)	Date/ Time	Weight (mg)	Tech. Initials
T151	89.0	–	4/15/04	–	–	–	–	–	–	–	SB
T152	87.8		4/15/10:30	178.8	4/16/19 0830	178.7	–	–	–	–	✗
T153	88.3			179.2		179.1	–	–	–	–	✗
T154	88.1			Weight	with	T152	–	–	–	–	✗
T155	88.0			356.0	4/16 0830	355.9	–	–	–	–	✗
T156	87.5			Weight	with	T155	–	–	–	–	✗
T157	87.6			87.8	4/16 0830	87.8	–	–	–	–	✗
T158	87.6			Weighed	with	T155	–	–	–	–	✗
T159	87.6			Weight	with	T153	–	–	–	–	✗
T160	87.8			Weighed	with	T155	–	–	–	–	✗
T161	88.6	4/23 - 16:30	4/25 - 13:30		4/26 - 8:00		–	–	–	–	SB
T162	87.9			181.1		181.2	–	–	–	–	SB
T163	88.5			181.3		181.3	–	–	–	–	SB
T164	88.9						–	–	–	–	SB
T165	88.2			273.6		273.7	–	–	–	–	SB
T166	88.5			88.7		88.6	–	–	–	–	SB
T167	87.6			* weighed as a set with T164/T165 *							SB
T168	88.5			* weighed as a pair with T163 *							SB
T169	88.4	4/24 - 10:20		90.0	4/26 - 8:00	90.1	–	–	–	–	SB
T170	88.0						–	–	–	–	SB
T171	88.2			267.9		267.8	–	–	–	–	SB
T172	88.2						–	–	–	–	SB
T173	88.5			~~267.2~~ 269.9		~~267.0~~ 270.0	–	–	–	–	SB
T174	87.7			88.0		87.8	–	–	–	–	SB
T175	88.4			* weighed as a pair with T172 + T173 *							SB
T176	88.4			* weighed as a pair with T170 + T171 *							SB
T177	87.8	4/26 - 9:00	4/29 - 7:30	89.8	4/30 - 8:00	89.8	–	–	–	–	SB
T178	87.5			179.1		179.1	–	–	–	–	SB
T179	88.0						–	–	–	–	SB
T180	87.9			181.8		181.6	–	–	–	–	SB

Sample Pre-Test Tare Sheet: ☐ Probes ☒ TX40 Filters ☐ O-Rings

Date/Time In Desiccator: 4/19 - 16:00 Balance ID#: 107 Audit Weight ID# / Weight(mg): 109A-100mg

Sample ID	Date/Time	Weight (mg)	Date/Time	Weight (mg)	Date/Time	Weight (mg)	Date/Time	Weight (mg)	Tech. Initials	Project/Run #
T221	4/23 16:00	88.7	4/25 - 7:00	88.7	-	-	-	-	SB	19-464 #3
T222		88.9		88.7	-	-	-	-	SB	1
T223		89.3		89.3	-	-	-	-	SB	
T224		89.4		89.4	-	-	-	-	SB	
T225		88.6		88.5	-	-	-	-	SB	
T226		88.4		88.3	-	-	-	-	SB	
T227		88.4		88.3	-	-	-	-	SB	
T228		88.9		88.8	-	-	-	-	SB	
T229		89.7		89.6	-	-	-	-	SB	
T230		88.4		88.5	-	-	-	-	SB	
T231		88.4		88.3	-	-	-	-	SB	
T232		88.3		88.4	-	-	-	-	SB	
T233		88.6		88.6	-	-	-	-	SB	
T234		87.5		87.5	-	-	-	-	SB	
T235		87.3		87.4	-	-	-	-	SB	
T236										
T237										
T238										
T239										
T240										
T241										
T242										
T243										
T244										
T245										
T246										
T247										
T248										
T249										
T250										

Sample Post-Test Analysis Sheet: ☐ Probes ☒ TX40 Filters ☐ O-Rings

Balance ID#: 107 Audit Weight ID# / Weight (mg): 109A-100mg

Sample ID	Tare (mg)	Date/ Time in Desiccator	Date/ Time	Weight (mg)	Date/ Time	Weight (mg)	Date/ Time	Weight (mg)	Date/ Time	Weight (mg)	Tech. Initials
T221	88.7	4/26-9:00	4/29-7:30	* weighed as a Pair		with T,8U	*				SB
T222	88.7	4/26-9:00	4/29-7:30	88.7	4/30/-8:00	88.8	-	-	-	-	SB
T223											
T224											
T225											
T226											
T227											
T228											
T229											
T230											
T231											
T232											
T233											
T234											
T235											
T236											
T237											
T238											
T239											
T240											
T241											
T242											
T243											
T244											
T245											
T246											
T247											
T248											
T249											
T250											

Sample Pre-Test Tare Sheet: ☒ Probes ☐ Filters ☐ O-Rings

Date/Time In Desiccator: 2/5- 12:00 Balance ID#: 107 Audit Weight ID# / Weight(mg): 109A/B – 100/200mg

Sample ID	Date/Time	Weight (mg)	Date/Time	Weight (mg)	Date/Time	Weight (mg)	Date/Time	Weight (mg)	Tech. Initials	Project/Run #
1A	4/3- 10:00	115628.8	4/4- 15:30	115629.1	4/5- 8:00	115628.9	–	–	SB	469-19 #8
1B		115903.0		115903.2	–	–	–	–	SB	
2A		116239.7		116240.0	4/5- 8:00	116239.9	–	–	SB	19-468 ~~#4~~
2B		116330.1		116330.2	–	–	–	–	SB	19-468 #4
3A		116073.5		116073.6	–	–	–	–	SB	469-19 #4
3B		116340.4		116340.3	–	–	–	–	SB	
4A	4/19- 16:00	116183.3	4/22- 11:00	116183.1	–	–	–	–	SB	19-464 #1
4B		116365.8		116365.9	–	–	–	–	SB	19-464 #1
5A		116769.6		116769.7	–	–	–	–	SB	19-464 #2
5B		116877.2		116877.4	–	–	–	–	SB	19-464 #2
6A		116544.3		116544.4	–	–	–	–	SB	19-464 #3
6B		116117.2		116117.3	–	–	–	–	SB	19-464 #3
7A										
7B										
8A										
8B										
9A										
9B										
10A										
10B										
11A										
11B										
12A										
12B										
13A										
13B										
14A										
14B										
15A										
15B										

Sample Post-Test Analysis Sheet: ☒ Probes ☐ Filters ☐ O-Rings

Balance ID#: 107 Audit Weight ID# / Weight (mg): 109A/B – 100/200mg

Sample ID	Tare (mg)	Date/ Time in Desiccator	Date/ Time	Weight (mg)	Date/ Time	Weight (mg)	Date/ Time	Weight (mg)	Date/ Time	Weight (mg)	Tech. Initials
1A	115628.9	–	–	–	–	–	–	–	–	–	SB
1B	115903.2	–	–	–	–	–	–	–	–	–	SB
2A	116239.9	4/13 - 10:00	4/17 - 12:30	116240.9	4/18 - 8:00	116240.9	–	–	–	–	SB
2B	116330.2	4/13 - 10:00	4/17 - 12:30	116331.2	4/18 - 8:00	116331.0	–	–	–	–	SB
3A	116073.6	4/11/19	4/15 1030	116073.7	4/18 0900	116073.8	–	–	–	–	[illegible]
3B	116340.3	4/11/19	4/15 1030	116340.5	4/18 0900	116340.5	–	–	–	–	[illegible]
4A	116183.1	4/23 - 16:30	4/25 - 13:30	116184.8	4/26 - 8:00	116184.0	4/29 - 7:30	116184.1	–	–	SB
4B	116365.9	4/23 - 16:30	4/25 - 13:30	116367.0	4/26 - 8:00	116366.4	4/29 - 7:30	116366.5	–	–	SB
5A	116769.7	4/24 - 10:20	4/25 - 13:30	116770.1	4/26 - 8:00	116769.5	4/29 - 7:30	116769.5	–	–	SB
5B	116877.4	4/24 - 10:20	4/25 - 13:30	116877.8	4/26 - 8:00	116877.3	4/29 - 7:30	116877.3	–	–	SB
6A	116544.4	4/26 - 9:00	4/29 - 7:30	116544.8	4/30 - 8:00	116544.9	–	–	–	–	SB
6B	116173	4/26 - 9:00	4/29 - 7:30	116117.5	4/30 - 8:00	116117.6	–	–	–	–	SB
7A											
7B											
8A											
8B											
9A											
9B											
10A											
10B											
11A											
11B											
12A											
12B											
13A											
13B											
14A											
14B											
15A											
15B											

Sample Pre-Test Tare Sheet: ☐ Probes ☐ Filters ☒ O-Rings

Date/Time In Desiccator: 2/5/19 - 12:00 Balance ID#: 107 Audit Weight ID# / Weight(mg): 109B-200mg

Sample ID	Date/Time	Weight (mg)	Date/Time	Weight (mg)	Date/Time	Weight (mg)	Date/Time	Weight (mg)	Tech. Initials	Project/Run #
1A	4/3 - 10:00	3562.3	4/4 - 15:30	3562.0	4/5 - 8:00	3562.1	-	-	SB	19-469 #3
1B	↓	3551.0	↓	3550.9	-	-	-	-	SB	↓
2A	↓	3548.0	↓	3548.0	-	-	-	-	SB	19-468 #4
2B	↓	3566.3	↓	3566.3	-	-	-	-	SB	19-468 #4
3A	↓	3575.3	↓	3575.4	-	-	-	-	SB	19-469 #4
3B	↓	3563.7	↓	3563.9	-	-	-	-	SB	19-469 - #4
4A	4/8 - 6:30	3587.8	4/19 - 16:00	3588.0	-	-	-	-	SB	19-464 #1
4B	↓	3575.9	↓	3576.0	-	-	-	-	SB	19-464 #1
5A	↓	3529.7	↓	3529.9	-	-	-	-	SB	19-464 #2
5B	↓	3526.6	↓	3526.8	-	-	-	-	SB	19-464 #2
6A	4/19 - 16:00	3611.3	4/22 - 11:00	3610.9	4/23 - 8:00	3610.9	-	-	SB	19-464 #3
6B	↓	3385.7	↓	3384.9	4/25 8:00	3385.0	-	-	SB	19-464 #3
7A										
7B										
8A										
8B										
9A										
9B										
10A										
10B										
11A										
11B										
12A										
12B										
13A										
13B										
14A										
14B										
15A										
15B										

Sample Post-Test Analysis Sheet: ☐ Probes ☐ Filters ☒ O-Rings

Balance ID#: 107 Audit Weight ID# / Weight (mg): 109B-200mg

Sample ID	Tare (mg)	Date/ Time in Desiccator	Date/ Time	Weight (mg)	Date/ Time	Weight (mg)	Date/ Time	Weight (mg)	Date/ Time	Weight (mg)	Tech. Initials
1A	3562.1		4/15 11:00	-	-	-	-	-	-	-	SB
1B	3550.9		4/15 11:00	-	-	-	-	-	-	-	SB
2A	3548.0	4/13-10:00	4/17-12:30	3549.0	4/18-8:00	3548.8	-	-	-	-	SB
2B	3566.3	4/13-10:00	4/17-12:30	3567.2	4/18-8:00	3567.1	-	-	-	-	SB
3A	3575.4	4/4/19	4/15 11:00	3575.6	4/16 08:30	3575.45	-	-	-	-	A
3B	3563.9	4/4/19	4/15 11:00	3563.9	4/16 08:30	3564.0	-	-	-	-	A
4A	3588.0	4/23-16:30	4/25-13:30	3588.4	4/26-8:00	3588.4	-	-	-	-	SB
4B	3576.0	4/23-16:30	4/25-13:30	3576.3	4/26-8:00	3576.2	-	-	-	-	SB
5A	3529.9	4/24-10:20	4/25-13:30	3530.4	4/26-8:00	3530.3	-	-	-	-	SB
5B	3526.8	4/24-10:20	4/25-13:30	3527.0	4/26-8:00	3527.0	-	-	-	-	SB
6A	3610.9	4/26-9:00	4/29-7:30	3611.1	4/30-8:00	3611.1	-	-	-	-	SB
6B	3385.0	4/26-9:00	4/29-7:30	3385.2	4/30-8:00	3385.0	-	-	-	-	SB
7A											
7B											
8A											
8B											
9A											
9B											
10A											
10B											
11A											
11B											
12A											
12B											
13A											
13B											
14A											
14B											
15A											
15B											

This is a copy of the label that accompanies each Regency Freestanding Woodstove (F5200). We have printed a copy of the contents here for your review.

NOTE: Regency units are constantly being improved. Check the label on the unit and if there is a difference, the label on the unit is the correct one.

SAFETY LABEL FOR F5200

525

OMNI-Test Laboratories, Inc.
Report #

LISTED ROOM HEATER, SOLID FUEL TYPE, ALSO FOR USE IN MOBILE HOME INSTALLATION

DO NOT REMOVE THIS LABEL

525

MODEL: REGENCY FREESTANDING STOVE - F5200
TESTED TO: UL-1482 -2011 / ULC-S627-00

U.S. ENVIRONMENTAL PROTECTION AGENCY CERTIFIED TO COMPLY WITH 2020 PARTICULATE EMISSION STANDARDS USING CORD WOOD." TESTED TO ASTM E3053. MODEL REGENCY F5200M – 0.9G /HR. THIS WOOD HEATER NEEDS PERIODIC INSPECTION AND REPAIR FOR PROPER OPERATION. CONSULT THE OWNER'S MANUAL. FOR FURTHER INFORMATION. IT IS AGAINST FEDERAL REGULATIONS TO OPERATE THIS WOOD HEATER IN A MANNER INCONSISTENT WITH THE OPERATING INSTRUCTIONS IN THE OWNER'S MANUAL.
CERTIFIÉ CONFORME AUX NORMES 2020 DU U.S. ENVIRONMENTAL PROTECTION AGENCY EN MATIÈRE D'ÉMISSION DE PARTICULES DE BOIS AVEC DU BOIS DE CORDE". APPROUVÉ ASTM E3053. MODÈLE REGENCY F5200M – 0,9 G /H. CET APPAREIL DE CHAUFFAGE AU BOIS DOIT ÊTRE INSPECTÉ PÉRIODIQUEMENT ET RÉPARÉ POUR FONCTIONNER CORRECTEMENT. CONSULTER LE MANUEL D'INSTALLATION POUR PLUS D'INFORMATION. LA RÉGLEMENTATION FÉDÉRALE INTERDIT DE FAIRE FONCTIONNER UN TEL APPAREIL SI LES CONSIGNES D'UTILISATION CONTENUES DANS LE PRÉSENT MANUEL NE SONT PAS RESPECTÉES.
INSTALL AND USE ONLY IN ACCORDANCE WITH THE MANUFACTURER'S INSTALLATION AND OPERATING INSTRUCTIONS. CONTACT LOCAL BUILDING OR FIRE OFFICIALS ABOUT RESTRICTIONS AND INSTALLATION INSPECTION IN YOUR AREA. USE 6"(203 MM) DIAMETER MINIMUM 24 MSG BLACK OR 26 MSG BLUED STEEL CONNECTOR WITH LISTED UL103 HT FACTORY-BUILT CHIMNEY SUITABLE FOR USE WITH SOLID FUELS OR MASONRY CHIMNEY. DOUBLE WALL CONNECTOR ONLY.
SEE LOCAL BUILDING CODE AND MANUFACTURER'S INSTRUCTIONS FOR PRECAUTIONS REQUIRED FOR PASSING A CHIMNEY THROUGH A COMBUSTIBLE WALL OR CEILING. DO NOT PASS CHIMNEY CONNECTOR THROUGH COMBUSTIBLE WALL OR CEILING. DO NOT CONNECT THIS UNIT TO A CHIMNEY FLUE SERVING ANOTHER APPLIANCE.
CAUTION: BURNING OF MATERIAL OTHER THAN THE SPECIFIED FUELS MAY MAKE THE CATALYST IN THE COMBUSTOR INACTIVE. THE COMBUSTOR IS FRAGILE, HANDLE CAREFULLY.
THE PERFORMANCE OF THE CATALYTIC DEVICE OR ITS' DURABILITY HAS NOT BEEN EVALUATED AS PART OF THE CERTIFICATION.
INSTALLER ET UTILISER SEULEMENT SELON LES INSTRUCTIONS D'INSTALLATION ET D'UTILISATION DU FABRICANT.
CONTACTER LES RESPONSABLES DU BÂTIMENT OU DU SERVICE-INCENDIE DE VOTRE RÉGION POUR CONNAÎTRE LES RESTRICTIONS ET EXIGENCES D'INSPECTION DANS VOTRE RÉGION. UTILISER UN CONNECTEUR D'UN DIAMÈTRE MINIMAL DE 203 MM (8PO) 24 MSG EN ACIER NOIR OU 26 MSG EN ACIER BRONZÉ AVEC CHEMINÉE PRÉFABRIQUÉE HOMOLOGUÉE
CONÇUE POUR UTILISATION AVEC COMBUSTIBLES SOLIDES OU UNE CHEMINÉE DE MAÇONNERIE.
VOIR LE CODE DU BÂTIMENT LOCAL ET LES INSTRUCTIONS DU FABRICANT CONCERNANT LES PRÉCAUTIONS EXIGÉES POUR INSTALLER UNE CHEMINÉE TRAVERSANT UN MUR OU PLAFOND EN MATÉRIAUX COMBUSTIBLES. NE FAITES PAS TRAVERSER LE CONNECTEUR DE CHEMINÉE DANS UN MUR OU PLAFOND EN MATÉRIAUX COMBUSTIBLES. NE RACCORDEZ PAS CE POÊLE À BOIS À UN CONDUIT DE CHEMINÉE DESSERVANT UN AUTRE APPAREIL.
CERTIFICATION DU MAISON MOBILE, APPAREIL DE CHAUFFAGE AMBIANT HOMOLOGUÉ À COMBUSTIBLE SOLIDE, CONVENANT AUSSI POUR INSTALLATION DANS UNE MAISON MOBILE

MINIMUM CLEARANCES TO COMBUSTIBLE MATERIALS	
INSTALLATION USING 8" LISTED DOUBLE WALL CONNECTOR ONLY: RESIDENTIAL, ALCOVE, MOBILE HOME	
To Top of stove: A) 279mm / 11"	To Flue Centre Line: E) 435mm / 17-1/8"
To Rear Shield: B) 254mm / 10"	To Flue Centre Line: F) 572mm / 22-1/2"
To Corner of Stove: C) 203mm / 8"	Alcove width: G) 1600mm / 63"
To Flue Centre Line: D) 648mm / 25-1/2"	To Top of Flue: H) 152mm / 6"

FLOOR PROTECTION*

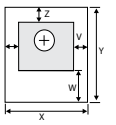

In USA:
V 203 mm / 8"
W 406 mm / 16"
X 1143 mm / 45"
Y 1248 mm / 49-1/8"
Z 152 mm / 6"
In Canada:
V 203 mm / 8"
W 450 mm / 18"
X 1143 mm / 45"
Y 1349 mm / 53-1/8"
Z 203 mm / 8"

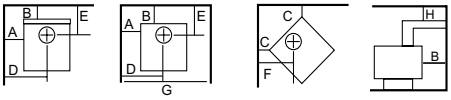

REGENCY FIREPLACE PRODUCTS

MANUFACTURED BY:
REGENCY FIREPLACE PRODUCTS
6988 VENTURE ST.
DELTA, BC V4G 1H4

MADE IN CANADA

MINIMUM PARALLEL / ALCOVE CEILING HEIGHT: 2.1 M / 83" MAXIMUM ALCOVE DEPTH 1219 MM / 48 IN.
HAUTEUR MINIMALE DU PLAFOND DE L'ALCÔVE : 2,1 M / 83PO. PROFONDEUR MAXIMALE DE L'ALCÔVE : 1219MM / 48 PO.

THE SPACE BENEATH THE HEATER MUST NOT BE OBSTRUCTED. OPERATE ONLY WITH FIREBRICKS IN PLACE.
FOR USE WITH SOLID WOOD FUEL ONLY. USE OF OTHER FUELS MAY DAMAGE HEATER AND CREATE A HAZARDOUS CONDITION. DO NOT OBSTRUCT COMBUSTION AIR OPENINGS. OPERATE ONLY WITH FIREBRICKS IN PLACE. RISK OF SMOKE AND FLAME SPILLAGE, OPERATE ONLY WITH DOORS FULLY CLOSED. DO NOT USE GRATE OR ELEVATE FIRE. BUILD WOOD FIRE DIRECTLY ON HEARTH. DO NOT OVERFIRE - IF HEATER OR CHIMNEY CONNECTOR GLOWS YOU ARE OVERFIRING. INSPECT AND CLEAN CHIMNEY AND CONNECTOR FREQUENTLY. UNDER CERTAIN CONDITIONS OF USE CREOSOTE BUILDUP MAY OCCUR RAPIDLY. KEEP FURNISHINGS AND OTHER COMBUSTIBLE MATERIAL AWAY FROM HEATER. REPLACE GLASS ONLY WITH NEOCERAM GLASS. COMBUSTIBLE FLOOR MUST BE PROTECTED BY NON-COMBUSTIBLE MATERIAL EXTENDING BENEATH THE HEATER AND TO THE FRONT AND SIDES AS INDICATED OR TO THE NEAREST PERMITTED COMBUSTIBLE MATERIAL.
OPTIONAL COMPONENTS: FAN (846-515), ELECTRICAL RATING: VOLTS 115, 60 HZ, 2 AMPS., AIRMATE, OUTSIDE AIR KIT, ASH DRAWER, COMBUSTOR PART #051-530
THIS WOOD HEATER CONTAIN A CATALYTIC COMBUSTOR WHICH REQUIRES PERIODIC INSPECTION AND REPLACEMENT FOR PROPER OPERATION. IT IS AGAINST THE LAW TO OPERATE THIS WOOD HEATER IN A MANNER INCONSISTENT WITH OPERATING INSTRUCTIONS IN INSTRUCTION MANUAL, OR IF THE CATALYTIC ELEMENT IS DEACTIVATED OR REMOVED.
DANGER: RISK OF ELECTRIC SHOCK. DISCONNECT POWER BEFORE SERVICING UNIT. DO NOT ROUTE POWER CORD UNDER OR IN FRONT OF APPLIANCE.
CAUTION: MOVING PARTS MAY CAUSE INJURY. DO NOT OPERATE UNIT WITH FAN HOSING REMOVED.
CAUTION: HOT PARTS. DO NOT OPERATE UNIT WITH DOOR OR GLASS REMOVED.
COMPONENTS REQUIRED FOR MOBILE HOME INSTALLATION: OUTSIDE AIR KIT AND ONE OF THE FOLLOWING DOUBLE WALL CONNECTOR
IN CANADA: LISTED SECURITY MODEL DP, OR OLIVER MACLEOD PRO-VENT PV DOUBLE WALLED CONNECTOR WITH LISTED CHIMNEY SYSTEM: LISTED SECURITY MODEL SECURITY S2100+, ICC EXCEL 2100, SIMPSON DURA-PLUS HTC, SELKIRK SENTINAL CF.
IN USA: LISTED DOUBLE WALL CONNECTORS SECURITY MODEL DP, SELKIRK MODEL DS, OLIVER MACLEOD PRO VENT PV, SIMPSON DURA VENT MODEL DVL, METAL-FAB DOUBLE WALL. CONNECTED TO ONE OF THE FOLLOWING COMPATIBLE CHIMNEY SYSTEMS SELKIRK SURE-TEMP, PROJET Nova Temp, SECURITY SECURE TEMP ASH+, SECURITY SECURE TEMP S-2100+, METAL-FAB TEMPGUARD 2100, AMERI-TEC HS, ICC EXCEL 2100 . USE CHIMNEY COMPONENTS AS SPECIFIED IN INSTALLATION INSTRUCTIONS.

HAUTEUR MINIMALE DU PLAFOND DE L'ALCÔVE : 2,1M / 83PO. PROFONDEUR MAXIMALE DE L'ALCÔVE : 1219 MM / 48 PO.
L'ESPACE SOUS LE CHAUFFAGE NE DOIT PAS ÊTRE OBSTRUÉ. UTILISEZ SEULEMENT AVES DES BIQUES EN PLACE.
POUR UTILISATION AVEC BOIS SOLIDE SEULEMENT. L'UTILISATION D'AUTRES COMBUSTIBLES PEUT ENDOMMAGER LE POÊLE ET CRÉER UNE CONDITION DANGEREUSE. L'ESPACE AU-DESSOUS DU POÊLE NE DOIT PAS ÊTRE OBSTRUÉ. UTILISER SEULEMENT AVEC LES BRIQUES RÉFRACTAIRES EN PLACE.
NE PAS SURCHAUFFER – SI LE POÊLE OU LE CONNECTEUR DE CHEMINÉE SE MET À ROUGIR, VOUS SURCHAUFFEZ. INSPECTEZ ET NETTOYEZ FRÉQUEMMENT LA CHEMINÉE ET LE CONNECTEUR. EN CERTAINES CONDITIONS D'UTILISATION, UN DÉPÔT DE CRÉOSOTE PEUT SE FORMER RAPIDEMENT. GARDEZ LES MEUBLES ET AUTRES MATÉRIAUX COMBUSTIBLES ÉLOIGNÉS DU POÊLE
REMPLACEZ LA VITRE SEULEMENT PAR DU VERRE EN NEOCERAM .
LE PLANCHER COMBUSTIBLE DOIT ÊTRE PROTÉGÉ PAR DES MATÉRIAUX NON COMBUSTIBLES DÉPASSANT DU DESSOUS, DU DEVANT ET DES CÔTÉS DU POÊLE, TEL QU'INDIQUÉ, OU JUSQU'AU MATÉRIAU COMBUSTIBLE LE PLUS PRÈS PERMIS.
COMPONENTS OPTIONNELS: VENTILATEUR (846-515), ÉVALUATION ÉLECTRIQUES: VOLTS 115, 60 HZ, 2 AMPS., AIRMATE, OUTSIDE AIR KIT, CENDRIER, COMBUSTER PART NO. 051-53CETTE APPAREILLE A BOIS CONTIENT UNE CHAMBRE DE COMBUSTION CATALYTIQUE, QUI A BESOIN D'INSPECTION ET DE REMPLACEMENT PÉRIODIQUEMENT POUR LE FONCTIONNEMENT APPROPRIE. CONSULTER LE MANUEL D'INSTALLATION PUR DE PLUS AMPLES INFORMATION. II EST CONTRE LA LOI D'ACTIONNEUR CETTE APPAREILLE A BOIS EN QUELQUE SORTE CON TRADICTOIRE AVE LES CONSIGNES D'UTILISATION DU MANUEL, OU SI L'ÉLÉMENT CATALYTIQUE EST ENLÈVE OU DÉSACTIVÉ.
ATTENTION: RISQUE DU CHOC ÉLECTRIQUE. AVANT DE L'ENTRETIEN, DÉBRANCHER L'APPAREIL. NE PLACEZ PAS LE CORDON D'ALIMENTATION EN FACE OU EN DESSOUS DE L'APPAREIL.
REMARQUE: D'ÉPLACER LES PIÈCES PEUVENT CAUSER LES BLESSEURS. L'APPAREIL NE DEVRAIT JAMAIS ÊTRE UTILISÉ LORSQUE FAN HOSING IS REMOVED
REMARQUE: TEMPÉRATURES ÉLEVÉES. NE JAMAIS FAIRE FONCTIONNER L'APPAREIL SI LA PORTE VITRÉE N'EST PAS BIEN EN PLACE.
COMPOSANTS EXIGÉS POUR INSTALLATION DANS UNE MAISON MOBILE : KIT DE PRISE D'AIR EXTÉRIEUR ET L'UN DES CONNECTEURS DE CHEMINÉE À DOUBLE PAROI SUIVANTS :
AU CANADA: CONNECTEURS DE CHEMINÉE HOMOLOGUÉS À DOUBLE PAROI : LISTED SECURITY MODEL DP, OR OLIVER MACLEOD PRO-VENT PV DOUBLE WALLED CONNECTOR WITH LISTED CHIMNEY SYSTEM: LISTED SECURITY MODEL SECURITY S2100+, ICC EXCEL 2100, SIMPSON DURA-PLUS HTC, SELKIRK SENTINAL CF.
AUX ÉTATS-UNIS : CONNECTEURS DE CHEMINÉE HOMOLOGUÉS À DOUBLE PAROI: SECURITY MODEL DP, SELKIRK MODEL DS, OLIVER MACLEOD PRO VENT PV, SIMPSON DURA VENT MODEL DVL, METAL-FAB DOUBLE WALL. CONNECTÉ À L'UN DES SYSTÈMES DE CHEMINÉE COMPATIBLES SUIVANTS:SELKIRK SURE-TEMP, PROJET Nova Temp, SECURITY SECURE TEMP ASH+, SECURITY SECURE TEMP S-2100+, METAL-FAB TEMPGUARD 2100, AMERI-TEC HS, ICC EXCEL 2100 .
UTILISER LES COMPOSANTS DE CHEMINÉE SPÉCIFIÉS DANS LES INSTRUCTIONS D'INSTALLATION.

CAUTION

HOT WHILE IN OPERATION DO NOT TOUCH. KEEP CHILDREN, CLOTHING AND FURNITURE AWAY. CONTACT MAY CAUSE SKIN BURNS. READ NAMEPLATE AND INSTRUCTIONS.

ATTENTION

CHAUD EN COURS DE FONCTIONNEMENT.
NE PAS TOUCHER. ÉLOIGNER LES ENFANTS, LES VÊTEMENTS ET LES

DATE OF MANUFACTURE
2019 ◯ 2020 ◯ 2021 ◯ 2020 ◯ 2023 ◯
JAN ☐ FEB ☐ MAR ☐ APR ☐ MAY ☐ JUN ☐ JUL ☐ AUG ☐ SEPT ☐ OCT ☐ NOV ☐ DEC ☐

Pro Series Freestanding Woodstove

Owners & Installation Manual

MODEL: F5200

www.regency-fire.com

F5200 Video

Tested by:

***Installer*: Please complete the details on the back cover and leave this manual with the homeowner.**
***Homeowner:* Please keep these instructions for future reference.**

920-100

FPI FIREPLACE PRODUCTS INTERNATIONAL LTD. 6988 Venture St., Delta, BC Canada, V4G 1H4

05.02.19

Thank-you for purchasing a **REGENCY FIREPLACE PRODUCT.**
The pride of workmanship that goes into each of our products will give you years of trouble-free enjoyment. Should you have any questions about your product that are not covered in this manual, please contact the **REGENCY DEALER** in your area.
Keep those **REGENCY FIRES** burning.

"This wood heater has a manufacturer set minimum low burn rate that must not be altered. It is against federal regulations to alter this setting or otherwise operate this wood heater in a manner inconsistent with operating instructions in this manual." Failure to follow the manual details can lead to smoke and CO emissions spilling into the home. It is recommended to have monitors in areas that are expected to generate CO such as heater fuelling areas..

"U.S. ENVIRONMENTAL PROTECTION AGENCY Certified to comply with 2020 particulate emission standards using cord wood." Model Regency F5200 – 0.9 g /hr."

SAFETY NOTE: If this woodstove is not properly installed, a house fire may result. For your safety, follow the installation instructions, contact local building, fire officials, or authority having jurisdiction about restrictions and installation inspection requirements in your area.

The following statements are required by the Environmental Protection Agency:
"This manual describes the installation and operation of the Regency F5200 catalytic equipped wood heater. This heater meets the 2020 U.S. Environmental Protection Agency's crib wood emission limits for wood heaters. Under specific test conditions this heater has been shown to deliver heat at rates ranging from 16,600 BTU/hr to 47,100 BTU/hr." Efficiency is determined using the B415 method resulting in lower and higher heat values. This heater generates the best efficiency when operated using well-seasoned wood and installed in the main living areas where the majority of the chimney is within the building envelope."

"It is against federal regulation to operate this wood heater in a manner inconsistent with operating instructions in this manual, or if the catalytic element is deactivated or removed."

"This wood heater contains a catalytic combustor, which needs periodic inspection and replacement for proper operation. It is against the law to operate this wood heater in a manner inconsistent with operating instructions in this manual, or if the catalytic element is deactivated or removed."

CAUTION: BURN UNTREATED WOOD ONLY. OTHER MATERIALS SUCH AS WOOD PRESERVATIVES, METAL FOILS, COAL, PLASTIC,GARBAGE, SULPHUR OR OIL MAY DAMAGE THE CATALYST

"This heater is designed to burn natural wood only. Higher efficiencies and lower emissions generally result when burning air dried seasoned hardwoods, as compared to softwoods or to green or freshly cut hardwoods."

DO NOT BURN:

- Treated wood
- Coal
- Garbage
- Cardboard
- Solvents
- Colored Paper
- Trash
- Lawn clippings or yard waste
- Materials containing rubber including tires
- Materials containing plastic
- Waste petroleum products , paints or paint thinners or asphalt products
- Materials containing asbestos
- Construction or demolition debris
- Railroad ties
- Manure or animal remains
- Saltwater driftwood or other previously salt water saturated materials
- Unseasoned wood
- Paper products, cardboard, plywood or particle board. The prohibition against burning these materials does not prohibit the use of fire starters made from paper, cardboard, saw dust, wax and similar substances for the purpose of starting a fire in a wood heater

Burning these materials may result in release of toxic fumes or render the heater ineffective and cause smoke.

The authority having jurisdiction (such as Municipal Building Department, Fire Department, Fire Prevention Bureau, etc.) should be consulted before installation to determine the need to obtain a permit.

Note: Due to the high efficiency of the F5200 unit, This unit **requires the use of double wall pipe** from the stove top to either wall or roof exit. A minimum of 36" vertical rise is required prior to using any elbows.

This unit must be connected to either a listed factory built chimney suitable for use with solid fuels and conforming to, ULC629 in Canada or UL-103HT in the United States of America. or code approved masonry chimney with flue liner.

F5200 is tested and certified to ULC-S627-00 and UL1482-2011.

SAVE THESE INSTRUCTIONS

Safety Label for F5200 4
Unit Dimensions 5
Wood Stove Outside Air Dimensions....6
Residential Installation....7
Modular Installation Options....7
Room Air - Important 7
Stove Assembly Prior To Installation 8
Minimum Clearance To Combustible Materials 9
Wall exit Clearance Factory Built Chimney 11
Masonry Chimney....11
Masonry Fireplace....12
Combustible Wall Chimney Connector Pass-throughs 13
Step-by-step Chimney And Connector Installation....14
Recommended Heights For Woodstove Flue....15
Mobile Home Installation 16
Optional outside air kit 17
Listed Components For Mobile Home Installation....18
Stainless steel smoke deflector
Installation / replacement:....19
Brick Installation 20
Fan Installation 21
Seasoned wood....22
Operating Instructions 23
Draft Control 23
First Fire 23
Fan Operation....24
Ash Disposal....24
Safety Guidelines and Warnings 24
Maintenance....26
Creosote....26
Door Gasket 26
Glass Maintenance....26
Wood Storage....26
Glass Replacement 26
Catalytic combustor 27
Bypass door gasket replacement 29
Secondary air tube removal / installation....30
Door catch Adjustment 30
Side baffle installation / removal....31
F5200 Stove Main Assembly....33
F5200 Stove BRICK LAYOUT....34
Door assembly 35
Warranty 36

NATIONAL FIREPLACE INSTITUTE NFI CERTIFIED www.nficertified.org

We recommend that our products be installed and serviced by professionals who are certified in the U.S. by the National Fireplace Institute® (NFI) or in Canada by Wood Energy Technical Training (WETT).

Wood Energy Technical Training

F5200 Video

WARNING: Cancer and Reproductive Harm
www.P65Warnings.ca.gov
919-874

This is a copy of the label that accompanies each Regency Freestanding Woodstove (F5200). We have printed a copy of the contents here for your review.

NOTE: Regency units are constantly being improved. Check the label on the unit and if there is a difference, the label on the unit is the correct one.

SAFETY LABEL FOR F5200

525

OMNI-Test Laboratories, Inc.
Report #

LISTED ROOM HEATER, SOLID FUEL TYPE, ALSO FOR USE IN MOBILE HOME INSTALLATION

DO NOT REMOVE THIS LABEL

525

MODEL: REGENCY FREESTANDING STOVE - F5200
TESTED TO: UL-1482 -2011 / ULC-S627-00

U.S. ENVIRONMENTAL PROTECTION AGENCY CERTIFIED TO COMPLY WITH 2020 PARTICULATE EMISSION STANDARDS USING CORD WOOD." TESTED TO ASTM E3053. MODEL REGENCY F5200M – 0.9G /HR. THIS WOOD HEATER NEEDS PERIODIC INSPECTION AND REPAIR FOR PROPER OPERATION. CONSULT THE OWNER'S MANUAL. FOR FURTHER INFORMATION. IT IS AGAINST FEDERAL REGULATIONS TO OPERATE THIS WOOD HEATER IN A MANNER INCONSISTENT WITH THE OPERATING INSTRUCTIONS IN THE OWNER'S MANUAL.
CERTIFIÉ CONFORME AUX NORMES 2020 DU U.S. ENVIRONMENTAL PROTECTION AGENCY EN MATIÈRE D'ÉMISSION DE PARTICULES DE BOIS AVEC DU BOIS DE CORDE". APPROUVÉ ASTM E3053. MODÈLE REGENCY F5200M – 0,9 G /H. CET APPAREIL DE CHAUFFAGE AU BOIS DOIT ÊTRE INSPECTÉ PÉRIODIQUEMENT ET RÉPARÉ POUR FONCTIONNER CORRECTEMENT. CONSULTER LE MANUEL D'INSTALLATION POUR PLUS D'INFORMATION. LA RÉGLEMENTATION FÉDÉRALE INTERDIT DE FAIRE FONCTIONNER UN TEL APPAREIL SI LES CONSIGNES D'UTILISATION CONTENUES DANS LE PRÉSENT MANUEL NE SONT PAS RESPECTÉES.
INSTALL AND USE ONLY IN ACCORDANCE WITH THE MANUFACTURER'S INSTALLATION AND OPERATING INSTRUCTIONS. CONTACT LOCAL BUILDING OR FIRE OFFICIALS ABOUT RESTRICTIONS AND INSTALLATION INSPECTION IN YOUR AREA. USE 6"(203 MM) DIAMETER MINIMUM 24 MSG BLACK OR 26 MSG BLUED STEEL CONNECTOR WITH LISTED UL103 HT FACTORY-BUILT CHIMNEY SUITABLE FOR USE WITH SOLID FUELS OR MASONRY CHIMNEY. DOUBLE WALL CONNECTOR ONLY.
SEE LOCAL BUILDING CODE AND MANUFACTURER'S INSTRUCTIONS FOR PRECAUTIONS REQUIRED FOR PASSING A CHIMNEY THROUGH A COMBUSTIBLE WALL OR CEILING. DO NOT PASS CHIMNEY CONNECTOR THROUGH COMBUSTIBLE WALL OR CEILING. DO NOT CONNECT THIS UNIT TO A CHIMNEY FLUE SERVING ANOTHER APPLIANCE.
CAUTION: BURNING OF MATERIAL OTHER THAN THE SPECIFIED FUELS MAY MAKE THE CATALYST IN THE COMBUSTOR INACTIVE. THE COMBUSTOR IS FRAGILE, HANDLE CAREFULLY.
THE PERFORMANCE OF THE CATALYTIC DEVICE OR ITS' DURABILITY HAS NOT BEEN EVALUATED AS PART OF THE CERTIFICATION.
INSTALLER ET UTILISER SEULEMENT SELON LES INSTRUCTIONS D'INSTALLATION ET D'UTILISATION DU FABRICANT.
CONTACTER LES RESPONSABLES DU BÂTIMENT OU DU SERVICE-INCENDIE DE VOTRE RÉGION POUR CONNAÎTRE LES RESTRICTIONS ET EXIGENCES D'INSPECTION DANS VOTRE RÉGION. UTILISER UN CONNECTEUR D'UN DIAMÈTRE MINIMAL DE 203 MM (8PO) 24 MSG EN ACIER NOIR OU 26 MSG EN ACIER BRONZÉ AVEC CHEMINÉE PRÉFABRIQUÉE HOMOLOGUÉE
CONÇUE POUR UTILISATION AVEC COMBUSTIBLES SOLIDES OU UNE CHEMINÉE DE MAÇONNERIE.
VOIR LE CODE DU BÂTIMENT LOCAL ET LES INSTRUCTIONS DU FABRICANT CONCERNANT LES PRÉCAUTIONS EXIGÉES POUR INSTALLER UNE CHEMINÉE TRAVERSANT UN MUR OU PLAFOND EN MATÉRIAUX COMBUSTIBLES. NE FAITES PAS TRAVERSER LE CONNECTEUR DE CHEMINÉE DANS UN MUR OU PLAFOND EN MATÉRIAUX COMBUSTIBLES. NE RACCORDEZ PAS CE POÊLE À BOIS À UN CONDUIT DE CHEMINÉE DESSERVANT UN AUTRE APPAREIL.
CERTIFICATION DU MAISON MOBILE, APPAREIL DE CHAUFFAGE AMBIANT HOMOLOGUÉ À COMBUSTIBLE SOLIDE, CONVENANT AUSSI POUR INSTALLATION DANS UNE MAISON MOBILE

MINIMUM CLEARANCES TO COMBUSTIBLE MATERIALS	
INSTALLATION USING 8" LISTED DOUBLE WALL CONNECTOR ONLY: RESIDENTIAL, ALCOVE, MOBILE HOME	
To Top of stove: A) 279mm / 11"	To Flue Centre Line: E) 435mm / 17-1/8"
To Rear Shield: B) 254mm / 10"	To Flue Centre Line: F) 572mm / 22-1/2"
To Corner of Stove: C) 203mm / 8"	Alcove width: G) 1600mm / 63"
To Flue Centre Line: D) 648mm / 25-1/2"	To Top of Flue: H) 152mm / 6"

FLOOR PROTECTION*

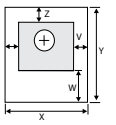

In USA:
V 203 mm / 8"
W 406 mm / 16"
X 1143 mm / 45"
Y 1248 mm / 49-1/8"
Z 152 mm / 6"
In Canada:
V 203 mm / 8"
W 450 mm / 18"
X 1143 mm / 45"
Y 1349 mm / 53-1/8"
Z 203 mm / 8"

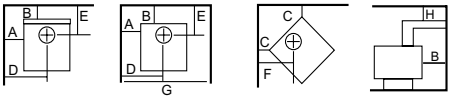

REGENCY FIREPLACE PRODUCTS

MANUFACTURED BY:
REGENCY FIREPLACE PRODUCTS
6988 VENTURE ST.
DELTA, BC V4G 1H4

MADE IN CANADA

MINIMUM PARALLEL / ALCOVE CEILING HEIGHT: 2.1 M / 83" MAXIMUM ALCOVE DEPTH 1219 MM / 48 IN.
HAUTEUR MINIMALE DU PLAFOND DE L'ALCÔVE : 2,1 M / 83PO. PROFONDEUR MAXIMALE DE L'ALCÔVE : 1219MM / 48 PO.

THE SPACE BENEATH THE HEATER MUST NOT BE OBSTRUCTED. OPERATE ONLY WITH FIREBRICKS IN PLACE.
FOR USE WITH SOLID WOOD FUEL ONLY. USE OF OTHER FUELS MAY DAMAGE HEATER AND CREATE A HAZARDOUS CONDITION. DO NOT OBSTRUCT COMBUSTION AIR OPENINGS. OPERATE ONLY WITH FIREBRICKS IN PLACE. RISK OF SMOKE AND FLAME SPILLAGE, OPERATE ONLY WITH DOORS FULLY CLOSED. DO NOT USE GRATE OR ELEVATE FIRE. BUILD WOOD FIRE DIRECTLY ON HEARTH. DO NOT OVERFIRE - IF HEATER OR CHIMNEY CONNECTOR GLOWS YOU ARE OVERFIRING. INSPECT AND CLEAN CHIMNEY AND CONNECTOR FREQUENTLY. UNDER CERTAIN CONDITIONS OF USE CREOSOTE BUILDUP MAY OCCUR RAPIDLY. KEEP FURNISHINGS AND OTHER COMBUSTIBLE MATERIAL AWAY FROM HEATER. REPLACE GLASS ONLY WITH NEOCERAM GLASS. COMBUSTIBLE FLOOR MUST BE PROTECTED BY NON-COMBUSTIBLE MATERIAL EXTENDING BENEATH THE HEATER AND TO THE FRONT AND SIDES AS INDICATED OR TO THE NEAREST PERMITTED COMBUSTIBLE MATERIAL.
OPTIONAL COMPONENTS: FAN (846-515), ELECTRICAL RATING: VOLTS 115, 60 HZ, 2 AMPS., AIRMATE, OUTSIDE AIR KIT, ASH DRAWER, COMBUSTOR PART #051-530
THIS WOOD HEATER CONTAIN A CATALYTIC COMBUSTOR WHICH REQUIRES PERIODIC INSPECTION AND REPLACEMENT FOR PROPER OPERATION. IT IS AGAINST THE LAW TO OPERATE THIS WOOD HEATER IN A MANNER INCONSISTENT WITH OPERATING INSTRUCTIONS IN INSTRUCTION MANUAL, OR IF THE CATALYTIC ELEMENT IS DEACTIVATED OR REMOVED.
DANGER: RISK OF ELECTRIC SHOCK. DISCONNECT POWER BEFORE SERVICING UNIT. DO NOT ROUTE POWER CORD UNDER OR IN FRONT OF APPLIANCE.
CAUTION: MOVING PARTS MAY CAUSE INJURY. DO NOT OPERATE UNIT WITH FAN HOSING REMOVED.
CAUTION: HOT PARTS. DO NOT OPERATE UNIT WITH DOOR OR GLASS REMOVED.
COMPONENTS REQUIRED FOR MOBILE HOME INSTALLATION: OUTSIDE AIR KIT AND ONE OF THE FOLLOWING DOUBLE WALL CONNECTOR
IN CANADA: LISTED SECURITY MODEL DP, OR OLIVER MACLEOD PRO-VENT PV DOUBLE WALLED CONNECTOR WITH LISTED CHIMNEY SYSTEM: LISTED SECURITY MODEL SECURITY S2100+, ICC EXCEL 2100, SIMPSON DURA-PLUS HTC, SELKIRK SENTINAL CF.
IN USA: LISTED DOUBLE WALL CONNECTORS SECURITY MODEL DP, SELKIRK MODEL DS, OLIVER MACLEOD PRO VENT PV, SIMPSON DURA VENT MODEL DVL, METAL-FAB DOUBLE WALL. CONNECTED TO ONE OF THE FOLLOWING COMPATIBLE CHIMNEY SYSTEMS SELKIRK SURE-TEMP, PROJET Nova Temp, SECURITY SECURE TEMP ASH+, SECURITY SECURE TEMP S-2100+, METAL-FAB TEMPGUARD 2100, AMERI-TEC HS, ICC EXCEL 2100 . USE CHIMNEY COMPONENTS AS SPECIFIED IN INSTALLATION INSTRUCTIONS.

HAUTEUR MINIMALE DU PLAFOND DE L'ALCÔVE : 2,1M / 83PO. PROFONDEUR MAXIMALE DE L'ALCÔVE : 1219 MM / 48 PO.
L'ESPACE SOUS LE CHAUFFAGE NE DOIT PAS ÊTRE OBSTRUÉ. UTILISEZ SEULEMENT AVES DES BIQUES EN PLACE.
POUR UTILISATION AVEC BOIS SOLIDE SEULEMENT. L'UTILISATION D'AUTRES COMBUSTIBLES PEUT ENDOMMAGER LE POÊLE ET CRÉER UNE CONDITION DANGEREUSE. L'ESPACE AU-DESSOUS DU POÊLE NE DOIT PAS ÊTRE OBSTRUÉ. UTILISER SEULEMENT AVEC LES BRIQUES RÉFRACTAIRES EN PLACE.
NE PAS SURCHAUFFER – SI LE POÊLE OU LE CONNECTEUR DE CHEMINÉE SE MET À ROUGIR, VOUS SURCHAUFFEZ. INSPECTEZ ET NETTOYEZ FRÉQUEMMENT LA CHEMINÉE ET LE CONNECTEUR. EN CERTAINES CONDITIONS D'UTILISATION, UN DÉPÔT DE CRÉOSOTE PEUT SE FORMER RAPIDEMENT. GARDEZ LES MEUBLES ET AUTRES MATÉRIAUX COMBUSTIBLES ÉLOIGNÉS DU POÊLE
REMPLACEZ LA VITRE SEULEMENT PAR DU VERRE EN NEOCERAM .
LE PLANCHER COMBUSTIBLE DOIT ÊTRE PROTÉGÉ PAR DES MATÉRIAUX NON COMBUSTIBLES DÉPASSANT DU DESSOUS, DU DEVANT ET DES CÔTÉS DU POÊLE, TEL QU'INDIQUÉ, OU JUSQU'AU MATÉRIAU COMBUSTIBLE LE PLUS PRÈS PERMIS.
COMPONENTS OPTIONNELS: VENTILATEUR (846-515), ÉVALUATION ÉLECTRIQUES: VOLTS 115, 60 HZ, 2 AMPS., AIRMATE, OUTSIDE AIR KIT, CENDRIER, COMBUSTER PART NO. 051-53CETTE APPAREILLE A BOIS CONTIENT UNE CHAMBRE DE COMBUSTION CATALYTIQUE, QUI A BESOIN D'INSPECTION ET DE REMPLACEMENT PÉRIODIQUEMENT POUR LE FONCTIONNEMENT APPROPRIE. CONSULTER LE MANUEL D'INSTALLATION PUR DE PLUS AMPLES INFORMATION. II EST CONTRE LA LOI D'ACTIONNEUR CETTE APPAREILLE A BOIS EN QUELQUE SORTE CON TRADICTOIRE AVE LES CONSIGNES D'UTILISATION DU MANUEL, OU SI L'ÉLÉMENT CATALYTIQUE EST ENLÈVE OU DÉSACTIVÉ.
ATTENTION: RISQUE DU CHOC ÉLECTRIQUE. AVANT DE L'ENTRETIEN, DÉBRANCHER L'APPAREIL. NE PLACEZ PAS LE CORDON D'ALIMENTATION EN FACE OU EN DESSOUS DE L'APPAREIL.
REMARQUE: D'ÉPLACER LES PIÈCES PEUVENT CAUSER LES BLESSEURS. L'APPAREIL NE DEVRAIT JAMAIS ÊTRE UTILISÉ LORSQUE FAN HOSING IS REMOVED
REMARQUE: TEMPÉRATURES ÉLEVÉES. NE JAMAIS FAIRE FONCTIONNER L'APPAREIL SI LA PORTE VITRÉE N'EST PAS BIEN EN PLACE.
COMPOSANTS EXIGÉS POUR INSTALLATION DANS UNE MAISON MOBILE : KIT DE PRISE D'AIR EXTÉRIEUR ET L'UN DES CONNECTEURS DE CHEMINÉE À DOUBLE PAROI SUIVANTS :
AU CANADA: CONNECTEURS DE CHEMINÉE HOMOLOGUÉS À DOUBLE PAROI : LISTED SECURITY MODEL DP, OR OLIVER MACLEOD PRO-VENT PV DOUBLE WALLED CONNECTOR WITH LISTED CHIMNEY SYSTEM: LISTED SECURITY MODEL SECURITY S2100+, ICC EXCEL 2100, SIMPSON DURA-PLUS HTC, SELKIRK SENTINAL CF.
AUX ÉTATS-UNIS : CONNECTEURS DE CHEMINÉE HOMOLOGUÉS À DOUBLE PAROI: SECURITY MODEL DP, SELKIRK MODEL DS, OLIVER MACLEOD PRO VENT PV, SIMPSON DURA VENT MODEL DVL, METAL-FAB DOUBLE WALL. CONNECTÉ À L'UN DES SYSTÈMES DE CHEMINÉE COMPATIBLES SUIVANTS:SELKIRK SURE-TEMP, PROJET Nova Temp, SECURITY SECURE TEMP ASH+, SECURITY SECURE TEMP S-2100+, METAL-FAB TEMPGUARD 2100, AMERI-TEC HS, ICC EXCEL 2100 .
UTILISER LES COMPOSANTS DE CHEMINÉE SPÉCIFIÉS DANS LES INSTRUCTIONS D'INSTALLATION.

CAUTION

HOT WHILE IN OPERATION DO NOT TOUCH. KEEP CHILDREN, CLOTHING AND FURNITURE AWAY. CONTACT MAY CAUSE SKIN BURNS. READ NAMEPLATE AND INSTRUCTIONS.

ATTENTION

CHAUD EN COURS DE FONCTIONNEMENT.
NE PAS TOUCHER. ÉLOIGNER LES ENFANTS, LES VÊTEMENTS ET LES

DATE OF MANUFACTURE
2019 ◯ 2020 ◯ 2021 ◯ 2020 ◯ 2023 ◯
JAN ☐ FEB ☐ MAR ☐ APR ☐ MAY ☐ JUN ☐ JUL ☐ AUG ☐ SEPT ☐ OCT ☐ NOV ☐ DEC ☐

UNIT DIMENSIONS

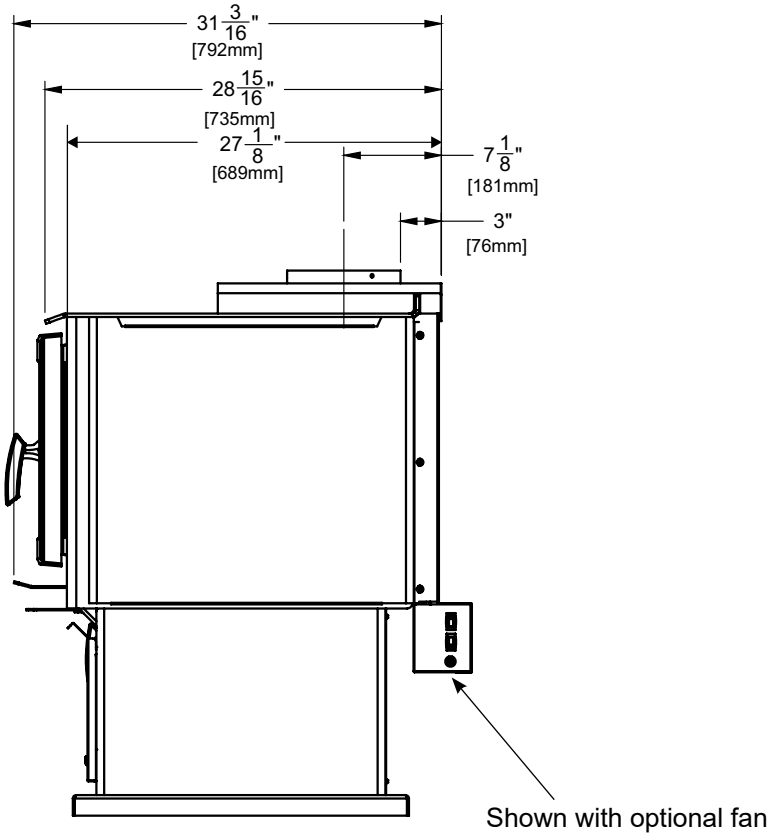

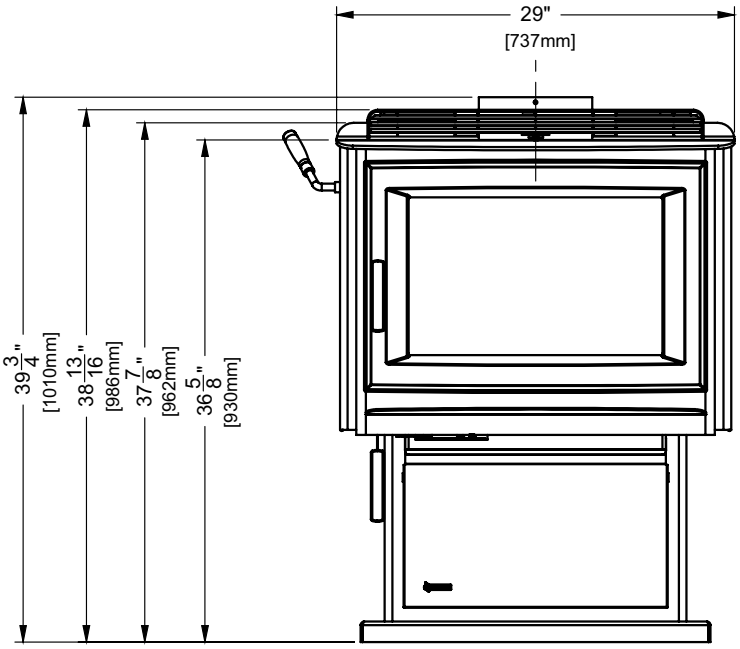

ALL PICTURES / DIAGRAMS SHOWN THROUGHOUT THIS MANUAL ARE FOR ILLUSTRATION PURPOSES ONLY. ACTUAL PRODUCT MAY VARY DUE TO PRODUCT ENHANCEMENTS.

WOOD STOVE OUTSIDE AIR DIMENSIONS

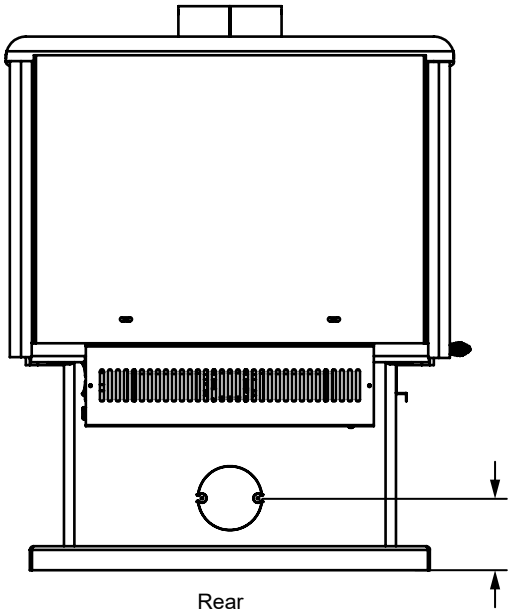

With pedestal from base of unit to centerline
5-1/2" (138mm)

RESIDENTIAL INSTALLATION

1. Please read this entire manual before you install and use your new woodstove. Failure to follow instructions may result in property damage, bodily injury or even death. Be aware that local Codes and Regulations may override some items in this manual. Check with your local inspector.

2. Select a position for your Regency Stove. Consult the minimum clearance chart for your model and set the stove in place. **For installation use listed double wall connector systems only.**

3. To insure vertical alignment, suspend a plumb bob from the ceiling over the exact center of your stove flue and mark a spot on the ceiling to indicate the center of the chimney.

4. Check that the area above the ceiling is clear for cutting. Re-confirm the clearance from the stove to combustibles to insure that they are within the prescribed limits.

5. This woodstove must be connected to a UL 103 HT (ULC S629) listed chimney or a code approved masonry chimney with a flue liner.

   Space heater is to be connected to a factory built chimney conforming to CAN/ULC-5629 standard for 650C factory built chimneys. The chimney requirement is 8", refer to appropriate sections in this manual for specifics.

6. Install chimney according to chimney manufacturers instructions. The performance of your woodstove is governed to a very large part by the chimney system. Too short a chimney can cause difficult start-up, dirty glass, back smoking when door is open, and even reduced heat output.

   Too tall a chimney may prompt excessive draft which can result in very short burn times and excessive heat output. The use of an inexpensive flue pipe damper may be helpful in reducing excessive draft.

   CAUTION: The chimney should be the same size as the 8" flue outlet on the stove. The chimney must be listed as suitable for use with solid fuels. For other types of chimneys check with your local building code officials. Do not confuse a chimney with a type "B" Venting System used for gas appliances as suitable for a wood burning appliance. For Mobile Home installations refer to that section within this manual.

7. Mark the location of the pedestal base or legs on the floor, then move the stove aside and mark the position of the floor protector.

8. The floor protector must be of non-combustible material and must extend 16" (406mm) in front of the door opening and 8" (203mm) to the sides and rear of the unit. Some areas may require a larger size floor protector. See your local inspector. For outside air installation refer to Mobile Home installation instructions within this manual.

NOTE: In Canada, floor protection must extend 18" (450mm) to the front and 8" (203mm) to each side and back of the stove.

9. When the floor protection is complete, position the stove with the flue collar centered under the installed chimney.

ROOM AIR - IMPORTANT

For installation using room air for combustion, remove knockout from the pedestal.
Mobile home installations require the use of outside air.
Fresh air is important - if heater is starved for air caused by exhaust fans or icing, the unit will not operate properly.

On pedestal units there are two locations where outside air may be adapted to the unit. If using the bottom of the pedestal, do not remove knockout from the rear of the pedestal. Only remove rear knockout if outside air will be brought in from the rear.

Note: Once the knockout is removed there are two tabs remaining. Bend both tabs out for ease of installation of outside air kit.

10. In areas with frequent seismic activity, Regency recommends that your unit is secured to the floor by using the bolt down holes inside the pedestal (the same ones used in Mobile Home installations).

11. For residential installations 8" double wall chimney only, the chimney connector must be at least 24 gauge steel. Do not use galvanized pipe. For Mobile Home installation refer to the Mobile Home installation instructions within this manual.

12. **DO NOT CONNECT THIS UNIT TO A CHIMNEY SERVING ANOTHER APPLIANCE.**

13. A chimney connector cannot pass through an attic or roof space, closet or similar concealed space, or a floor, ceiling, wall or partition of combustible construction. In Canada, if passage through a wall, or partition of combustible construction is desired, the installation shall conform to CAN/CSA-B365, Installation Code for Solid-Fuel-Burning Appliances and Equipment.

14. Your Regency Woodstove is not to be connected to any air distribution duct.

Emissions from burning wood or gas could contain chemicals known to the State of California to cause cancer, birth defects or other reproductive harm.

CAUTION:
Do not alter or makeshift chimney or install. Install as per Manual.

MODULAR INSTALLATION OPTIONS

WARNING: ONLY USE SPECIFIED COMPONENTS.
The following items are required when assembling your Regency Stove. F5200 unit - the Rear Heat Deflector is supplied with the stove, but if you choose not to use it you must use the Airmate instead.

Modular Part	See the Minimum Clearance to Combustible Materials chart in the Installation section of this manual
F5200 Airmate OR Rear Heat Deflector	Convection heat with Airmate vs. Radiant Heat with Rear Heat Deflector. The Airmate pushes heat forward out into the room, the Rear Heat Deflector deflects the heat upward. Refer to the Installation sections within this manual.
OPTIONS: These can be installed at time of installation or added later:	
Blower/Fan	Adding the blower will increase the area heated by the stove, it can move warm air beyond the room where the stove is located.
Ash Drawer Kit	Adding the Ash Drawer Kit makes cleaning ashes out of the stove easier and cleaner (refer to Bottom Shield Ash Drawer Kit, Installation section).
Airmate	The Airmate pushes heat forward out into the room.
Outside Air Kit	Draw combustion air from the outside of dwelling.

STOVE ASSEMBLY PRIOR TO INSTALLATION

The F5200 unit requires the pedestal attached to the base. The F5200 stove requires either the Airmate or Rear Heat Deflector on top of the stove. Clearances to combustible materials vary depending on whether the airmate or rear heat deflector is installed, so be sure to check the Minimum Clearances, Installation section.

Airmate Assembly for F5200

1. The airmate sits on top of the stove with the slots in the sides fitting over the curved deflector on the rear stove top. See Diagram 1. Discard the Rear Heat Deflector that is supplied with the unit, it is not required if the airmate is installed.

2. Center the airmate and push it forward to the front of the stove. The back of the airmate should be level with the back and sides of the rear heat shield. See Diagrams 2 & 3.

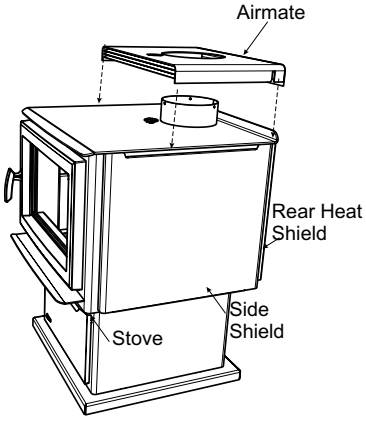

Diagram 1

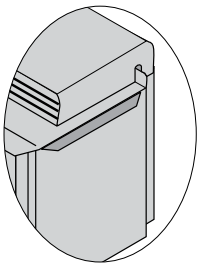

Diagram 2

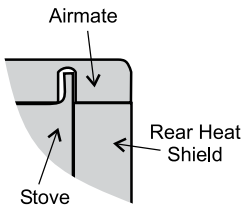

Diagram 3

Rear Heat Deflector Assembly for F5200

The rear heat deflector is supplied with the stove and must be installed unless the optional airmate has been selected. It stops the heat radiated from the flue collar from overheating the rear wall. The rear heat deflector is installed on top of the rear heat shield, as shown in Diagram 4.

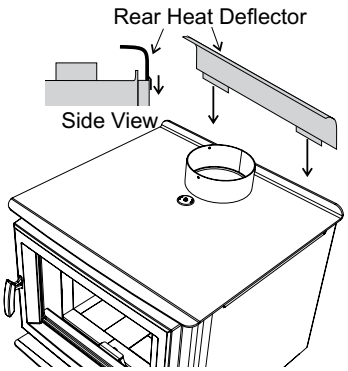

Diagram 4

Side Shield Adjustment

The left and right side shields are lowered for shipping and handling. It allows for a handhold on the top of the stove. Before placing in the Step Stove in its final position, the side shields must be raised.

Loosen the screws on the rear on the stove (3 per side), slide the side panel up as far as possible and then secure by tightening the screws.

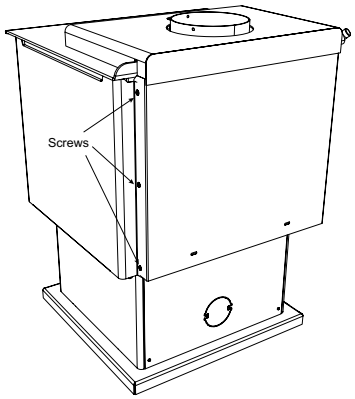

Diagram 5

Logo Installation

1. Push the Regency logo into the two holes in the front bottom left corner of the pedestal cover plate.

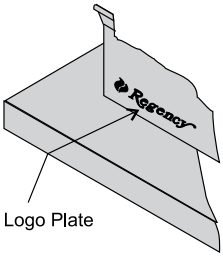

Diagram 6

Note: Any paint touch up should be done prior to placing logo on pedestal.

2. If not using ash drawer, then cover plate must be installed.

MINIMUM CLEARANCE TO COMBUSTIBLE MATERIALS

Please read the section below carefully as clearances depend on whether the Airmate or the Rear Heat Deflector is installed on the stove. Measurements "From Unit" are from the top plate of the stove to a side wall or to a corner, and from the rear heat shield to a back wall.

Clearances may only be reduced by means approved by the regulatory authority.

Note: Minimum ceiling height roof exit - 83" (2108 mm)

NOTE: This clearance is also required for air space between the appliance and wall/ceiling.

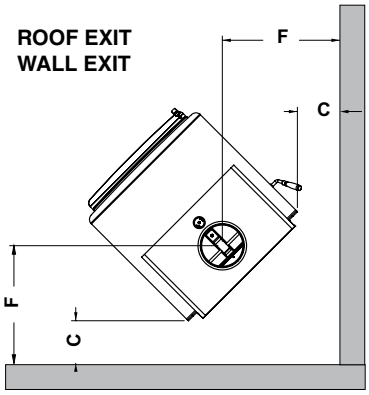

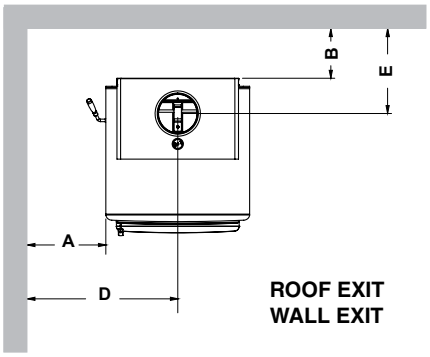

NOTE: Approved with Listed Double Wall pipe only. Do not use single wall pipe.

NOTE: Be aware that local Codes and Regulations may override some clearances listed in this manual. Check with your local inspector.

NOTE: Clearances to combustibles are for the safety of the property. To avoid overheating and damaging the appliance these clearances should be maintained for non-combustibles also.

Residential Close Clearance (To be installed with required pipe components) Listed Double Wall Pipe
When the stove is installed as a close clearance residential unit, a listed double wall connector is required from the stove collar to the ceiling level.

		A	B	C	D	E	F
F5200	with Airmate or Rear Deflector	11" 279mm	10" 254mm	8" 203mm	25-1/2" 648mm	17-1/8" 435mm	22-1/2" 572mm

Mobile Home Close Clearance (To be installed with required pipe components) Listed Double Wall Pipe When the stove is installed as a close clearance residential unit, a listed double wall connector is required from the stove collar to the ceiling level. Refer to Mobile Home Installation in this manual.

		A	B	C	D	E	F
F5200	with Airmate or Rear Deflector	11" 279mm	10" 254mm	8" 203mm	25-1/2" 648mm	17-1/8" 435mm	22-1/2" 572mm"

Minimum Alcove Clearance to Combustible Materials

The Regency Freestanding models have been alcove approved and must be installed with a listed double wall connector to the ceiling level.

Note: Minimum alcove ceiling height - 83" (2108 mm) Vertical Termination}
H = Maximum depth of alcove - 48" (1219 mm)
G= Minimum width of alcove - 63" (1600 mm)

NOTE: This clearance is also required for air space between the appliance and wall/ceiling.

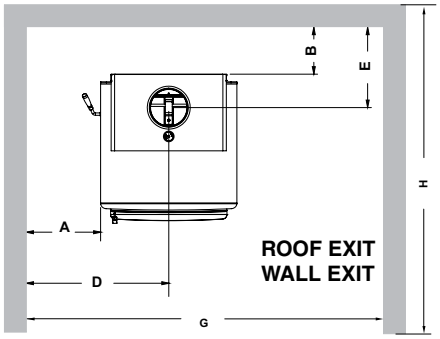

FLOOR PROTECTION (EMBER PROTECTION ONLY REQUIRED)

A combustible floor must be protected by non-combustible material (like tile, concrete board, or certified to UL-1618 or as defined by local codes) extending beneath the heater and a minimum of 8" (203mm) from each side and minimum 16" (406mm) from the front face of the stove and minimum 6" (or the rear clearance to combustibles whichever is smaller) from the rear of the stove.

When installed with horizontal venting, non-combustible floor protection must beneath the flue pipe and extend 2" (51mm) beyond each side.

Minimum Overall Width (X) of Floor Protector for all installations:

Stove	F5200	45" (1143 mm)

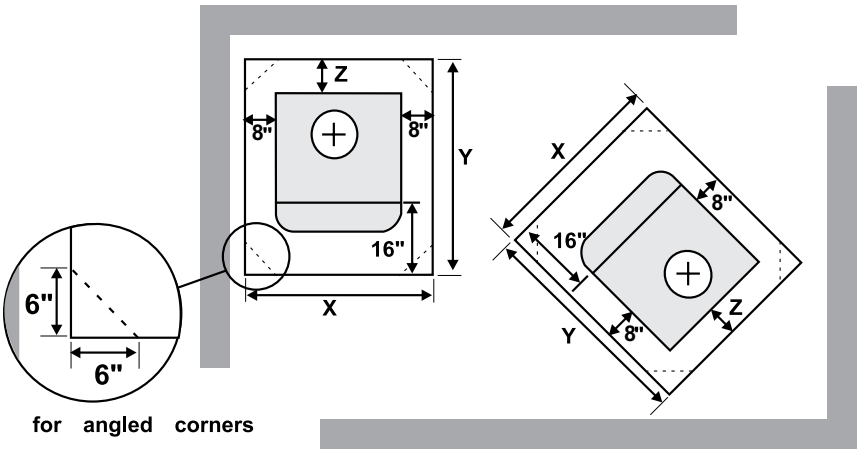

NOTE: In Canada, floor protection must extend 18" (450mm) to the front and 8" (203mm) to each side and back of the stove.

Minimum Overall Depth (Y) of Floor Protector						
Unit	**Residential Close Clearance**		**Mobile Home Close Clearance**		**Alcove**	
F5200	**Y**	**Z**	Y	**Z**	Y	**Z**
USA	49-1/8"	8"	49-1/8"	8"	49-1/8"	8"
Canada	53-1/8"	8"	53-1/8"	8"	53-1/8"	8"

The rear clearance to combustibles is less than 6" (for corner installations the rear corners may be angled to take advantage of the closer clearances.

WALL EXIT CLEARANCE FACTORY BUILT CHIMNEY

When a metal prefabricated chimney is used, the manufacturer's installation instructions must be followed. You must also purchase and install the ceiling support package or wall pass-through and "T" section package, firestops (where needed), insulation shield, roof flashing, chimney cap, etc. Maintain proper clearance to the structure as recommended by the manufacturer. The chimney must be the required height above the roof or other obstructions for safety and proper draft operation.

Minimum vertical of 36" before any offset.
Horizontal Maximum of 36" with 1/4" rise per foot.

NOTE: Recommend using 2-45º instead of 90º to improve draft and performance.

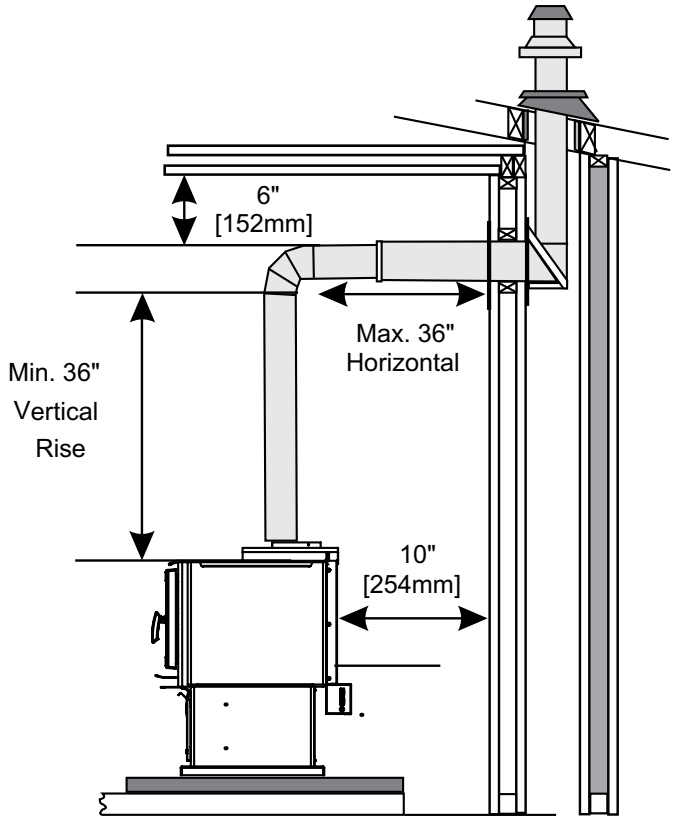

MASONRY CHIMNEY

Ensure that a masonry chimney meets the minimum standards of the National Fire Protection Association (NFPA) by having it inspected by a professional. Make sure there are no cracks, loose mortar or other signs of deterioration and blockage. Have the chimney cleaned before the stove is installed and operated. When connecting the stove through a combustible wall to a masonry chimney, special methods are needed.

Minimum vertical of 36" before any offset.
Horizontal Maximum of 36" with 1/4" rise per foot.

NOTE: Recommend using 2-45º instead of 90º to improve draft and performance.

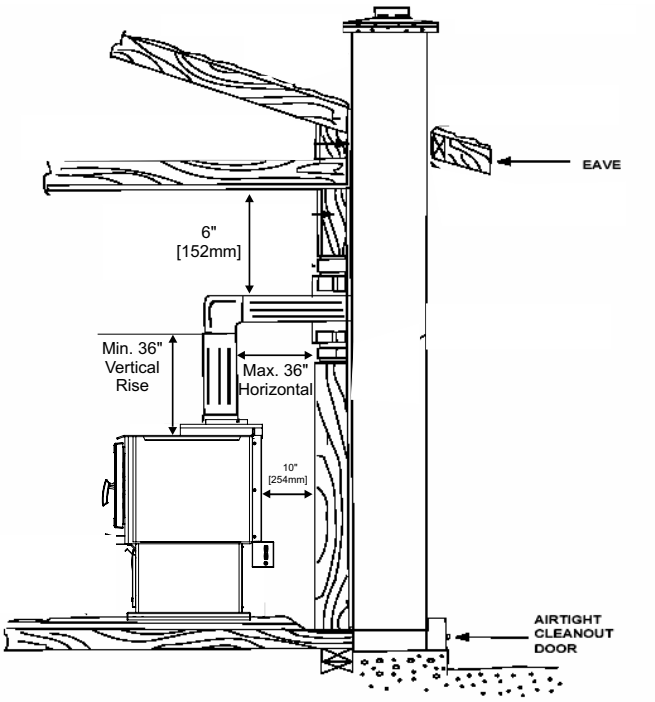

MASONRY FIREPLACE

There are listed kits available to connect a stove to a masonry fireplace. The kit is an adapter that is installed at the location of the fireplace damper. The existing damper may have to be removed to allow installation.

Minimum vertical of 36" before any offset.
Horizontal Maximum of 36" with 1/4" rise per foot.

NOTE: Recommend using 2-45º instead of 90º to improve draft and performance.

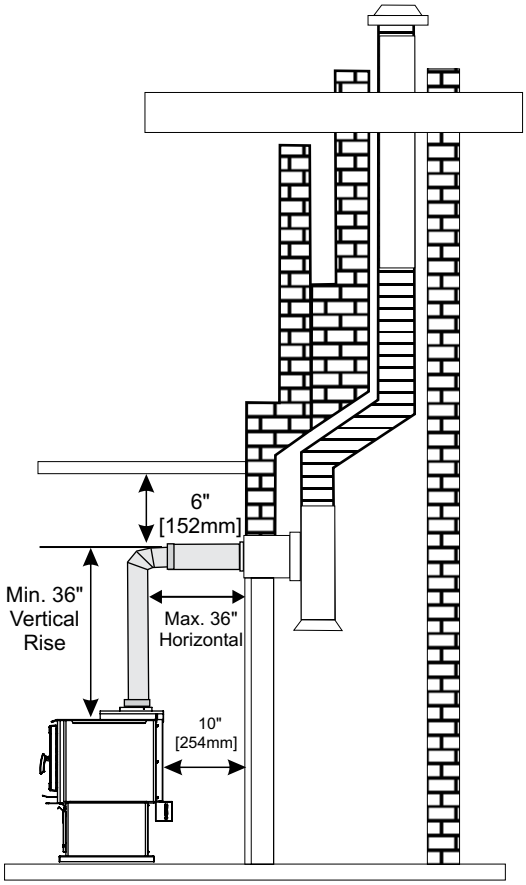

COMBUSTIBLE WALL CHIMNEY CONNECTOR PASS-THROUGHS

Method A: 12" (304.8 mm) Clearance to Combustible Wall Member:

Using a minimum thickness 3.5" (89 mm) brick and a 5/8" (15.9 mm) minimum wall thickness clay liner, construct a wall pass-through. The clay liner must conform to ASTM C315 (Standard Specification for Clay Fire Linings) or its equivalent. Keep a minimum of 12" (304.8 mm) of brick masonry between the clay liner and wall combustibles. The clay liner shall run from the brick masonry outer surface to the inner surface of the chimney flue liner but not past the inner surface. Firmly grout or cement the clay liner in place to the chimney flue liner.

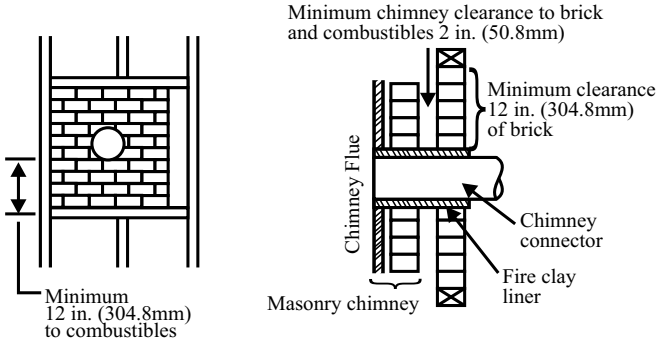

Method B: 9" (228.6 mm) Clearance to Combustible Wall Member:

Using a 8" (203.2 mm) inside diameter, listed, factory-built Solid-Pak chimney section with insulation of 1" (25.4 mm) or more, build a wall pass-through with a minimum 9" (228.6 mm) air space between the outer wall of the chimney length and wall combustibles. Use sheet metal supports fastened securely to wall surfaces on all sides, to maintain the 9" (228.6 mm) air space. When fastening supports to chimney length, do not penetrate the chimney liner (the inside wall of the Solid-Pak chimney). The inner end of the Solid-Pak chimney section shall be flush with the inside of the masonry chimney flue, and sealed with a non-water soluble refractory cement. Use this cement to also seal to the brick masonry penetration.

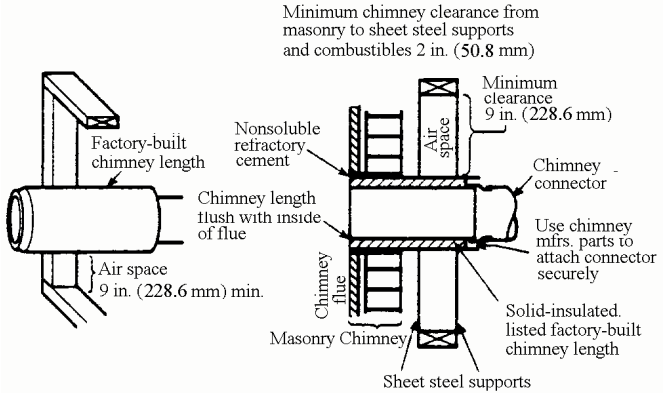

Method C: 6" (152.4 mm) Clearance to Combustible Wall Member:

Starting with a minimum 24 gage (.024" [.61 mm]) 8" (203.2 mm) metal chimney connector, and a minimum 24 gage ventilated wall thimble which has two air channels of 1" (25.4 mm) each, construct a wall pass-through. There shall be a minimum 6" (152.4) mm separation area containing fiberglass insulation, from the outer surface of the wall thimble to wall combustibles. Support the wall thimble, and cover its opening with a 24-gage minimum sheet metal support. Maintain the 6" (152.4 mm) space. There should also be a support sized to fit and hold the metal chimney connector. See that the supports are fastened securely to wall surfaces on all sides. Make sure fasteners used to secure the metal chimney connector do not penetrate chimney flue liner.

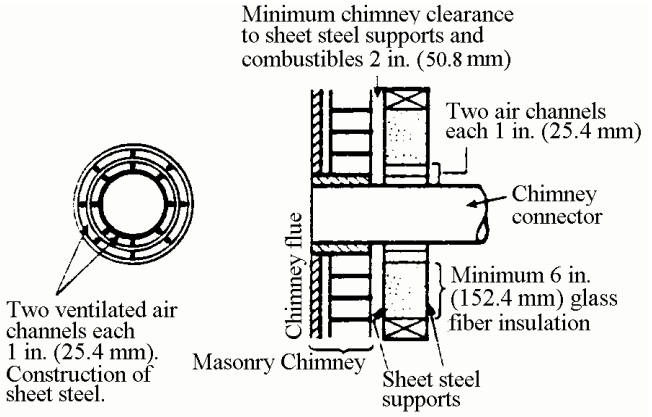

Method D: 2" (50.8 mm) Clearance to Combustible Wall Member:

Start with a solid-pak listed factory built chimney section at least 12" (304 mm) long, with insulation of 1" (25.4 mm) or more, and an inside diameter of 8" (2 inches [51 mm] larger than the 8" [203.2 mm] chimney connector). Use this as a pass-through for a minimum 24-gage single wall steel chimney connector. Keep solid-pak section concentric with and spaced 1" (25.4 mm) off the chimney connector by way of sheet metal support plates at both ends of chimney section. Cover opening with and support chimney section on both sides with 24 gage minimum sheet metal supports. See that the supports are fastened securely to wall surfaces on all sides. Make sure fasteners used to secure chimney flue liner.

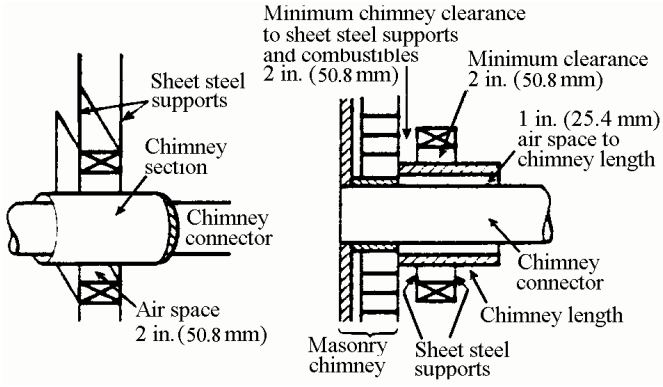

STEP-BY-STEP CHIMNEY AND CONNECTOR INSTALLATION

Note: These are a generic set of chimney installation instructions. Always follow the manufacturers own instructions explicitly. Verify the Minimum Recommended Heights for Woodstove Flue (Table 1 in the Installation section).

1. With your location already established, cut and frame the roof hole. It is recommended that no ceiling support member be cut for chimney and support box installation. If it is necessary to cut them, the members must be made structurally sound.

2. Install radiant shield and support from above.

3. Stack the insulated pipe onto your finish support to a minimum height of 3 feet above the roof penetration, or 2 feet above any point within 10 feet measured horizontally. There must be at least 3 feet of chimney above the roof level.

NOTE: Ensure each section of chimney is positively attached and secured.

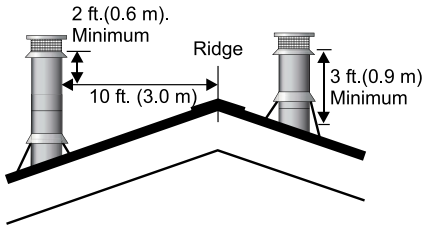

Note: Increasing the chimney height above this minimum level will sometimes help your unit to "breathe" better by allowing a greater draft to be created. This greater draft can decrease problems such as, difficult start-ups, back-smoking when door is open, and dirty glass. It might be sufficient to initially try with the minimum required height, and then if problems do arise add additional height at a later date.

4. Slide the roof flashing over your chimney and seal the flashing to the roof with roofing compound. Secure the flashing to your roof with nails or screws.

5. Place the storm collar over the flashing, sealing the joints with a silicone caulking.

6. Fasten the raincap with spark screens (if required) to the top of your chimney.

7. For optimum efficiency when installing into a masonry chimney, size accordingly, i.e. the 8" (203.2mm) flue dia. is 50.3 sq.in. (1277.62mm^2).

8. To complete your chimney installation, install the double wall connector pipe from the stove's flue collar to the chimney support device.

9. If you are using a horizontal connector, the chimney connector should be as high as possible while still maintaining the 18" (457mm) minimum distance from the horizontal connector to the ceiling.

10. **NOTE: Residential Close Clearance and Alcove installations require a listed double wall connector from the stove collar to the ceiling level.**

The Diagrams below illustrate one way to install your unit into a standard ceiling or with a horizontal connector. Check with your dealer or installer for information on other options available to you.

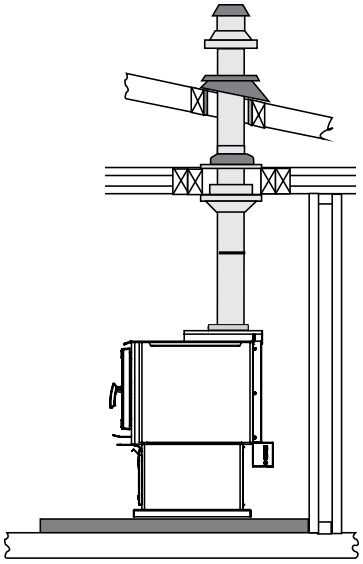

Standard Ceiling Installation

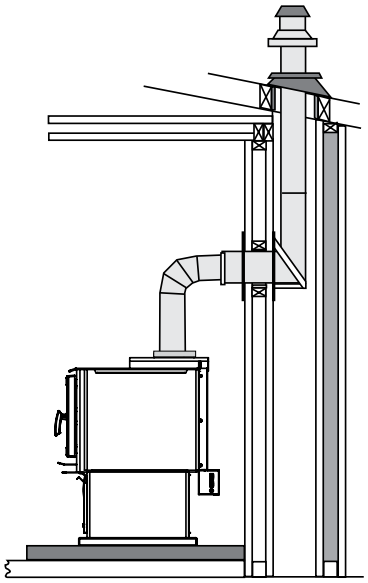

Horizontal Installation

RECOMMENDED HEIGHTS FOR WOODSTOVE FLUE

Simple rules on draft (refer to Table 1).

1) At sea level minimum height is 12' straight.

2) Add the following vertical height to compensate for:
45 deg. elbow = 1 ft.
90 deg. elbow = 2 ft.
"T" = 3 ft.
Each foot of horizontal run = 2 ft.

3) Add 4% overall for each 1000' above sea level.

Example: a)
1-1/2 ft. of horizontal run = 3 ft.
one "T" = 3 ft.
Total Addition (at sea level) = 6 ft.

Example: b)
One 90 deg. elbow = 2 ft.
2 ft. of horizontal run = 4 ft.
one "T" = 3 ft.
Total Addition (at sea level) = 9 ft.

Recommended Flue Height

Elevation	Example a)	Example b)
0'	18'	21'
1000'	18.72'	21.84'
2000'	19.44'	22.68'
5000'	21.60'	25.20'
8000'	23.76'	27.72'

MINIMUM RECOMMENDED FLUE HEIGHTS IN FEET
(Measured from the top of the unit)

ELEVATION (FT) ABOVE SEA LEVEL	NUMBER OF ELBOWS For listed double wall pipe.			
	0	2 x 15°	2 x 30°	2 x 45°
0-1000	12.0	13.0	15.0	16.0
1000-2000	12.5	13.5	15.5	16.5
2000-3000	13.0	14.0	16.0	17.0
3000-4000	13.5	14.5	17.0	18.0
4000-5000	14.0	15.0	17.5	18.5
5000-6000	14.5	15.5	18.0	19.0
6000-7000	15.0	16.0	18.5	20.0
7000-8000	15.5	16.5	19.0	20.5
8000-9000	16.0	17.0	20.0	21.0
9000-10000	16.5	17.5	20.5	22.0

NOTE: No more than one offsets (two elbows) allowed. Two 45° elbows equal one 90° elbow.

Table 1

MOBILE HOME INSTALLATION

Once you have properly marked the position of your unit and the floor protection as outlined in the Residential Installation items #1 through #8, a supply of fresh air has to be supplied to your unit.

See Optional Outside Air Kit instructions in this manual.

Place your unit in position and secure it to the floor using two lag bolts 3/8" (10mm) x 3-1/2" (89mm) through the two holes inside the pedestal base. It is important to maintain the structural integrity of the Mobile Home floor, walls and roof when installing your unit.

For Mobile Home units installed in the U.S. the unit must be grounded using a #8 ground wire with approved termination and star washer.

CAUTION: At no time use unlabelled parts, or substitute parts made for another chimney system.

Install as per chimney manufacturer's installation instructions.

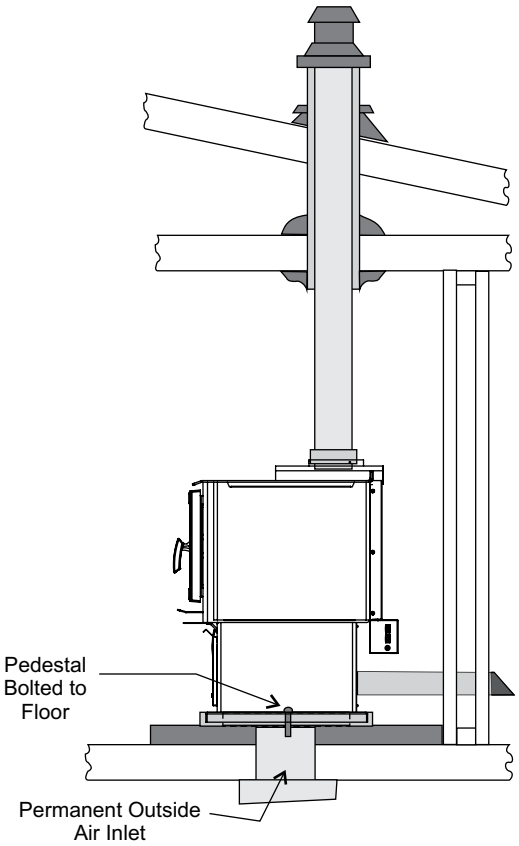

WARNING: Operate only with door fully closed - open feed door to feed fire only.

1. Identify the position of the outside air damper by the orientation of the metal handle that rests outside the galvanized pipe. The metal handle and the damper disc are in line with each other. This means that if the metal handle is in a horizontal position, the damper is flat and fully open.

2. Open the damper fully whenever you start a fire. This will allow the outside air to be drawn in the pedestal base eliminating any potential smoke escaping the stove and entering the room. (Negative air pressure)

In addition to standard installation instructions the following requirements are mandatory for installation in a mobile home.

1. The stove must be permanently bolted to the floor of the Mobile Home using the floor screws provided.

2. The stove must have a permanent outside air source for combustion.

3. The stove must be electrically grounded to the steel chassis of the Mobile Home.

4. A listed double-wall connector chimney system, roof thimble, spark arrestor and roof flashing kit suitable for use in Mobile Homes must be used.

5. If the chimney exits the Mobile Home at a location other than through the roof, and exits at a point 7ft. (2130mm) or less above the ground level on which the Mobile Home is positioned , a guard or method of enclosing the chimney shall be fitted at the point of exit for a height up to 7ft. (2130mm).

6. The chimney shall be attached directly to the room heater and shall extend at least 3 ft. (914mm) above the part of the roof through which it passes. The top of the chimney should project at least 2ft. (610mm) above the highest elevation of any part of the Mobile Home within 10 ft. (3048mm) of the chimney.

7. The chimney system shall comply with Local Requirements.

8. Any openings in a chimney guard where required must not permit the entrance of 3/4" (19mm) diameter rod.

9. **CAUTION: THE STRUCTURAL INTEGRITY OF THE MOBILE HOME ROOF, FLOOR, WALLS AND CEILING MUST BE MAINTAINED.**

10. Check any other local building code as other local codes may apply.

11. **WARNING: DO NOT INSTALL IN A SLEEPING ROOM OF A MOBILE HOME.**

12. Use silicone to create an effective vapour barrier at the location where the chimney or other component penetrates to the exterior of the structure.

OPTIONAL OUTSIDE AIR KIT

The Outside Air Kit is an option for Freestanding Stoves. Outside air for combustion can be brought in either through the bottom of the pedestal or through the rear plate of the pedestal.

Damper Installation

NOTE: The damper cannot be installed if attaching outside air to the bottom of the appliance.

Supplied damper allows the combustion air to be closed off when unit is not in operation.

Install the damper within the round pipe in an easily accessible location.

1. Drill a 5/16" hole in the desired location.
2. Insert damper with threaded section out.
3. Install damper handle and secure with wing nut.

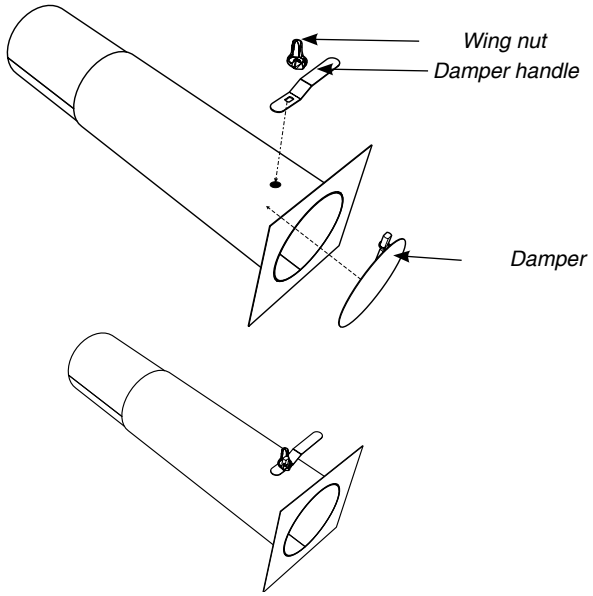

Completed Install

Outside Air Through Pedestal Rear

Remove the blanking plate from the rear of the pedestal and bend the two tabs out 90 degrees. Pipe fresh air into the pedestal area by using a minimum 4" metallic duct pipe with a mesh grill at the outside termination.

Fasten the pipe to the cover plate using the tabs and 2 screws.

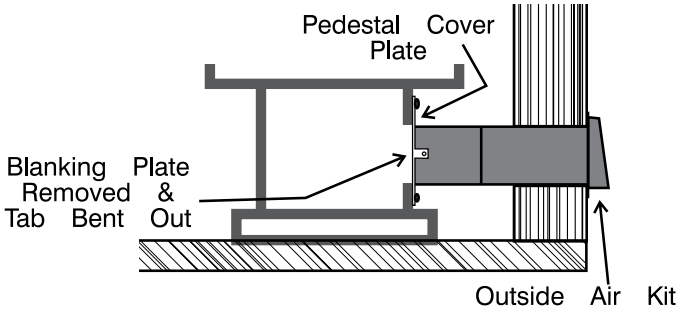

Side View

Outside Air Through Pedestal Bottom

Mark the position of your unit as outlined in the "General Information" and "Clearances to Combustibles" section of the manual. Pipe fresh air into the pedestal area by using a minimum 4" duct pipe with a mesh grill at the outside termination.

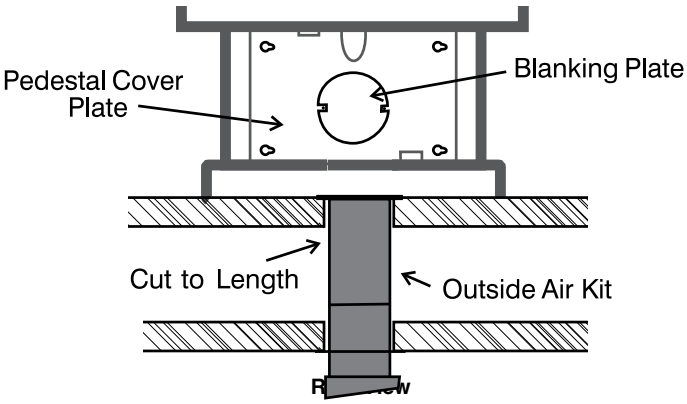

LISTED COMPONENTS FOR MOBILE HOME INSTALLATION

The Regency F5200 Freestanding pedestal units are approved for installation in a Mobile Home if one of the following pipe systems is used.

NOTE: Required double wall chimney connector must be in good condition and kept clean.

U.S. Installation*

SELKIRK SURE-TEMP

Qty.	Part #	Description
1	8T-FCK	Flat Ceiling kit
1	8T-PCK	Pitched ceiling kit
1	8ST-48	48" Chimney length (also in 6", 9", 12", 18", 24", 36" lengths)

PROJET Nova Temp

Qty.	Part #	Description
1	80-CSC	Round support w/coupler
1	80-CSBC	Square support w/coupler
1	81-RF17	Flashing
1	81-08SL48	48" Chimney length (also in 8", 12", 24", 36" lengths)
1	81-RDC	Rain Cap

SECURITY SECURE TEMP ASHT+

Qty.	Part #	Description
1	8XSCC	Round support w/coupler
1	8XSSC	Square support w/coupler
1	8FA	Flashing
1	8L48	48" Chimney length (also in 8", 12", 18", 24", 36" lengths)
1	8CC	Rain Cap

SECURITY SECURE TEMP S-2100+

Qty.	Part #	Description
1	8XSCC	Round support w/coupler
1	8XSSC	Square support w/coupler
1	8FA	Flashing
1	8L48	48" Chimney length (also in 8", 12", 18", 24", 36" lengths)
1	8CC	Rain Cap

METAL-FAB TEMP/GUARD 2100

Qty.	Part #	Description
1	8DWBA	Connector
1	8TGRS	Roof Support
1	8TGG36	Chimney Length
1	8TGG12	Chimney Length
1	8TGF	Flashing
1	8TGC	Rain Cap

AMERI-TEC HS

Qty.	Part #	Description
1	8HSRA-12	Roof support assembly (6PLRS-12-BK)
1	8FFU	Flat to 6/12 Flashing
1	8HSS-6	48" Chimney length (also in 12", 24", 36" lengths)
1	6HS-RCS	Rain Cap

SIMPSON DURA-PLUS

Qty.	Part #	Description
1	9245N	Round Ceiling support
1	9248AN	Square Ceiling support 11"
1	9248	Rain Cap
1	9249V	0/12 - 6/12 Flashing
1	9959	Storm collar
1	9217	36" Chimney length (also in 6", 9", 12", 24" lengths)

ICC EXCEL 2100

Qty.	Part #	Description
1	8EL48	48" Chimney length (also in 12", 18", 24" lengths.
1	8ERC	Rain Cap
1	8ERCS	Spark Screen (for rain cap)
1	8ERDS/ESS	Round/Square support box
1	8EF	Flashing
1	8UBSE	"Ultrablack" Close Clearance Connector

Canadian Installations*

SECURITY S2100+ (see to left for details)

ICC EXCEL 2100 (see above for details)

SIMPSON DURA-PLUS HTC

Qty.	Part #	Description
1	9245N	Round Ceiling support
1	9248AN	Square Ceiling support 11"
1	9248	Rain Cap
1	9249V	0/12 - 6/12 Flashing
1	9959	Storm collar
1	9217CF	36" Chimney length (also in 6", 9", 12", 24" lengths.

SELKIRK SENTINAL CF

Qty.	Part #	Description
1	8CF-CBSP	Ceiling support kit
1	8CF-CCSK	Square support kit
1	8CF-FRA-A	0/12 - 6/12 Flashing
1	8CF-36	36" Chimney length (also in 9", 12", 18", 24" lengths.

*The use of alternate pitch flashings, support box extensions, additional chimney lengths, and additional chimney bracing, may be used on each of the previously listed systems. These parts though must be from the same system as listed, and must be a similar and/or complimentary part.

CAUTION: At no time use unlabelled parts, or substitute parts made for another chimney system.

Install as per chimney manufacturer's installation instructions.

STAINLESS STEEL SMOKE DEFLECTOR INSTALLATION / REPLACEMENT

1. The stainless smoke deflector is located in the upper front area of the fire-box (see diagram below). The deflector is held in place with 2 x 7/16" hex head bolts. Prior to the first fire, ensure deflector is seated properly and secured with 2 hand tightened bolts.

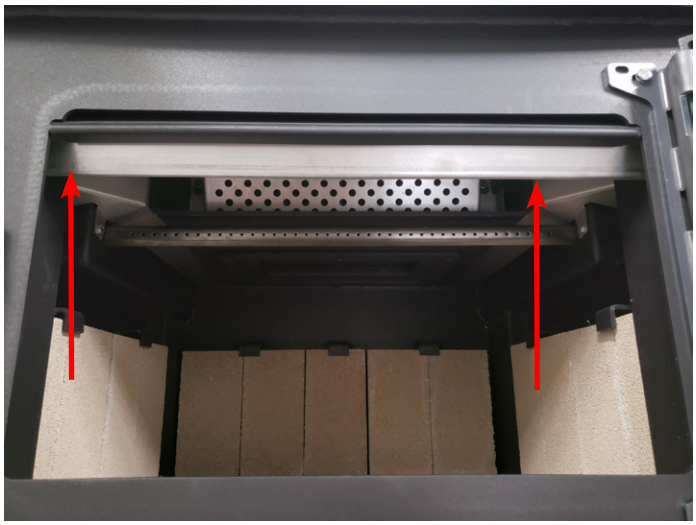

2. To replace the deflector, loosen off both 7/16" bolts and slide deflector upward and out. Install new deflector and hand tighten 7/16" hex head bolts. Ensure positive location of the deflector prior to hand tightening.
WARNING: Operation of the unit without proper installation of smoke deflector will void warranty.

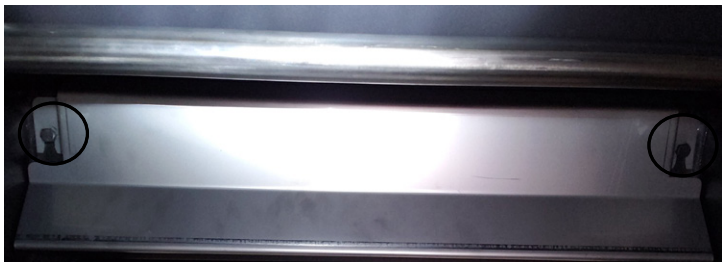

3. Ensure deflector is seated so bolts are situated at the top of the opening before tightening. Hand tighten bolts only.

3. Correct Install: Ensure return edge of smoke deflector is seated within the backside of the glass wash.

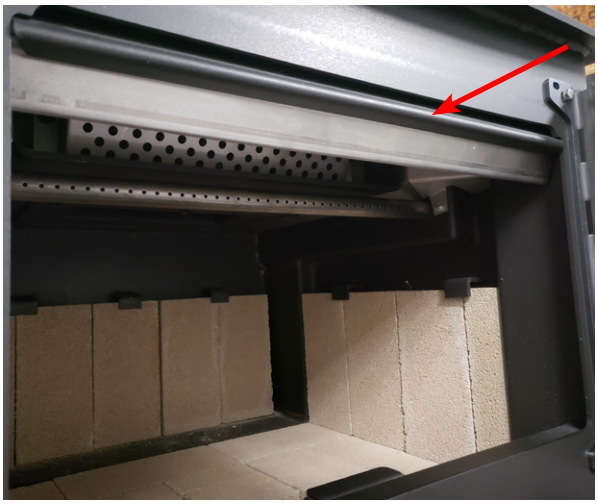

3. Incorrect Install: Return edge of smoke deflector seated under the glass wash.

BRICK INSTALLATION

Firebrick is included to extend the life of your stove and radiate heat more evenly. Install all firebricks per the Diagram below and place in their correct positions. Do not use a grate.

1. Remove box of firebricks from inside unit.

2. Remove Lyotherm sheet from mailer tube and install on base of firebox as shown below.

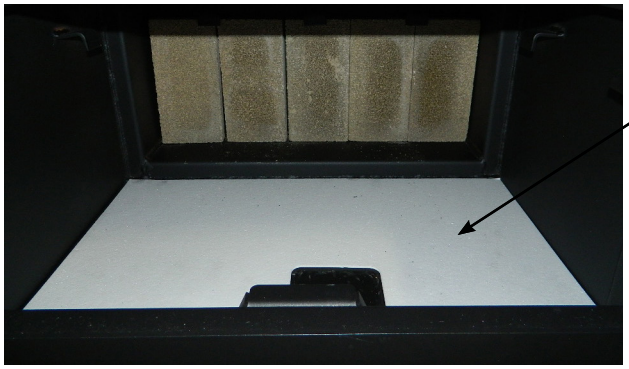

3. Order of firebrick install:
- a) Rear Firebrick
- b) Firebox floor - install brick over Lytherm Sheet
- c) Right and left side Firebricks

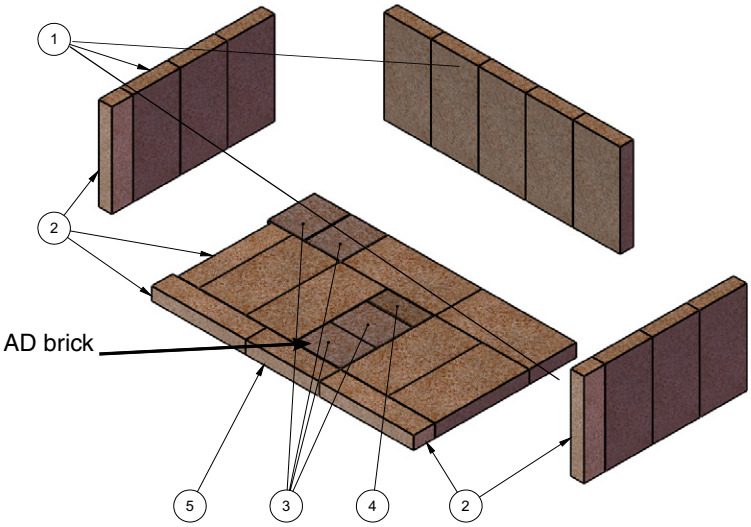

Fire bricks	
#	Size
1	4-1/2" x 9"
2	2" x 9"
3	3-1/2" x 4-1/2"
4	1-3/4" x 4-1/2"
5	2" x 7"

NOTE: The "AD" brick covers the Ash Dump hole that is used when the Ash Drawer Kit is installed.

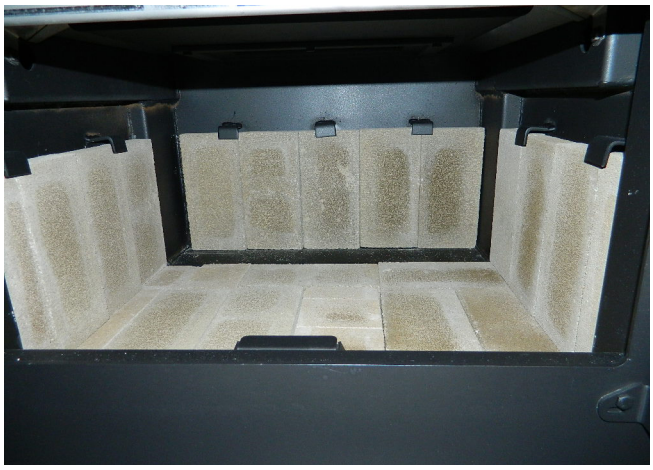

Final Install

FAN INSTALLATION

Fan assembly for use only with the room heater marked to indicate such use.

FAN INSTALLATION (120V FAN)

1. Remove the two screws from the top of the fan housing.
2. Slide the fan up into the rear heat shield.
3. After aligning holes, secure the fan to the rear heat shield using the two screws removed earlier.

Note: The connection cord should not be in contact with any hot surfaces.

WARNING: FAN ASSEMBLY MUST BE DISCONNECTED FROM THE SOURCE OF ELECTRICAL SUPPLY BEFORE ATTEMPTING THE INSTALLATION.

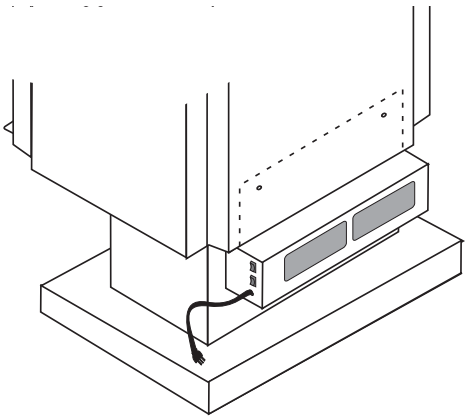

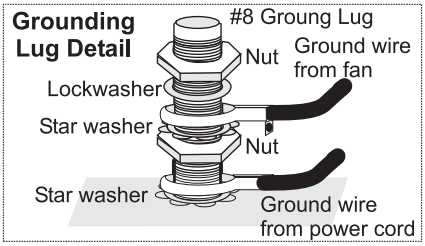

FAN OPERATION

AUTOMATIC

To operate the fan automatically, push the bottom switch on the side of the fan housing to "AUTO" and the top switch to either "HIGH" or "LOW" for fan speed.

This will allow the fan to turn on as the stove has come up to operating temperature. It will also shut the fan system off after the fire has gone out and the unit cooled to below a useful heat output range.

If the fan cycles on and off continuously the thermo switch sensor is not making contact with the stove body. Remove the fan, bend the bracket closer to the stove and re-install the fan.

MANUAL

To manually operate the fan system push the bottom switch to "MAN" and the top switch to either "HIGH" or "LOW". This will bypass the sensing device and allow full control of the fan.

Switching from "AUTO" to "MAN" or "HIGH" to "LOW" may be done anytime.

WARNING: Electrical Grounding Instructions
This appliance is equipped with a three pronged (grounding) plug for your protection against shock hazard and should be plugged directly into a properly grounded three-prong receptacle. Do not cut or remove the grounding prong from this plug.

CAUTION: Label all wires prior to disconnection when servicing controls. Wiring errors can cause improper and dangerous operation.

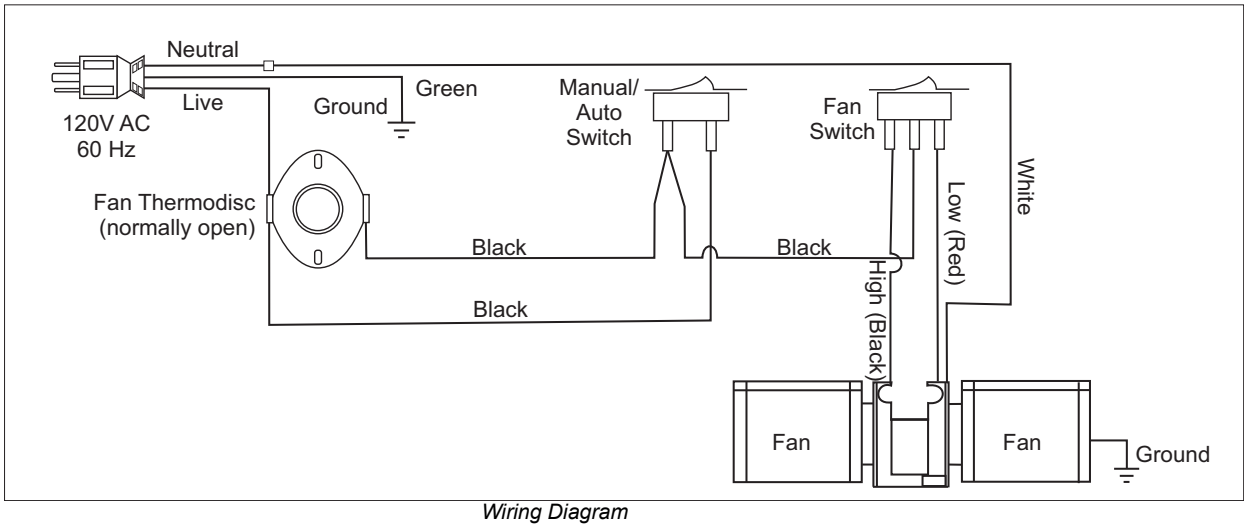

Wiring Diagram

SEASONED WOOD

Whether you burn wood in a fireplace, stove or insert, good quality firewood is the key to convenience, efficiency and safety. Wet wood and pieces that are not the right size and shape for your wood burner can be frustrating, burn inefficiently and deposit creosote that can fuel a dangerous chimney fire. Good planning, seasoning and storage of the firewood supply are essential to successful wood burning.

- Stack the wood in separate rows in an open location where the summer sun can warm it and breezes can carry away the moisture. Do not stack unseasoned wood tightly in an unvented storage area.
- Do not allow firewood to lie on the ground for more than a couple of days before stacking. Mould and rot can set in quickly.
- Stack the wood up off the ground on poles, lumber rails or pallets.
- The top of the pile can be covered to keep off rain, but do not cover the sides.

Softer woods like pine, spruce and poplar/aspen that is cut, split and stacked properly in the early spring maybe be ready for burning in the fall. Extremely hard woods like oak and maple, and large pieces of firewood, may take a minimum of a full year to dry enough. Drying may also take longer in damp climates

There are a few ways to tell if wood is dry enough to burn efficiently. Use as many indicators as possible to judge the dryness of the firewood your are considering. Here are ways to judge firewood moisture.

- Using a moisture meter, select the species of fuel and then penetrate the pins into a split piece. Ideal moisture and seasoned firewood should be less than 20% moisture content.
- Checks or cracks in the end grain can be an indication of dryness, but may not be a reliable indicator. Some wet wood has checks and some dry wood has no checks.
- The wood tends to darken from white or cream colour to grey or yellow as it dries.
- Two dry pieces banged together sound hollow; wet pieces sound solid and dull.
- Dry wood weighs much less than wet wood.
- Split a piece of wood. If the exposed surface feels damp, the wood is too wet to burn.

OPERATING INSTRUCTIONS

With your unit now correctly installed and safety inspected by your local authority, you are now ready to start a fire. Before establishing your first fire, it is important that you fully understand the operation of your Catalytic combustor and draft control.

WARNING
Fireplace Stoves equipped with doors should be operated only with doors fully closed. If doors are left partly open, gas and flame may be drawn out of the fireplace stove opening, creating risks from both fire and smoke.

DRAFT CONTROL

Both the primary and air wash drafts are controlled by the control slide located on the front left side of the unit (when facing the unit). To increase your draft - slide to the left to open, and to decrease - slide to the right closed. The F5200 unit has a secondary draft system that continually allows combustion air to the induction ports at the top of the firebox, just in front of the catalytic combustor.

Draft is the force which moves air from the appliance up through the chimney. The amount of draft in your chimney depends on the length of the chimney, local geography, nearby obstructions and other factors. Too much draft may cause excessive temperatures in the appliance and may damage the catalytic combustor. Inadequate draft may cause back puffing into the room and plugging of the chimney or catalyst.

Catalyst Bypass Control
Back - Closed **Front - Open**

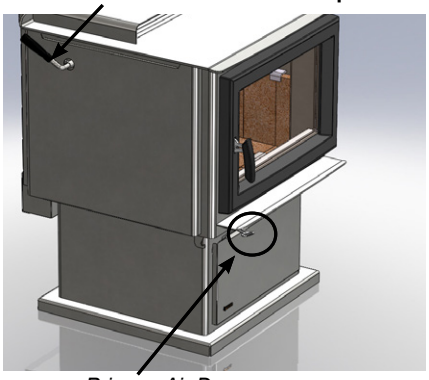

Primary Air Damper
Left - Open **Right - Closed**

WARNING: To build a fire in ignorance or to disregard the information contained in this section can cause serious permanent damage to the unit and void your warranty!!

FIRST FIRE

When your installation is completed and inspected you are ready for your first fire.

THIS UNIT IS DESIGNED TO BURN SEASONED CORDWOOD ONLY. COAL AND BRIQUETTES ARE NOT APPROVED.

1. Open the catalytic by-pass control fully. (Handle facing forward)

2. Open firebox door and build a small fire using paper and dry kindling on the firebrick hearth, DO NOT USE A GRATE. Secure door on the firebox and wait a few minutes for a good up-draft in the flue to establish the fire. (Leaving the door slightly open will help your fire start more rapidly.)

   CAUTION: Never leave unit unattended if door is left open. This procedure is for fire start-up only, as unit may overheat if door is left open for too long.

3. With the catalytic by-pass damper still in the fully open position, add two or three seasoned logs to your fire. Form a trench in the ash bed to allow air to reach the rear of the firebox prior to closing the door.

4. The temperature in the stove and the gases entering the combustor must reach between 500F - 700F for catalytic activity to start. From the start up of a cold stove, a medium to high firing rate must be maintained for 30min. This ensures that the stove, catalyst and fuel are all stabilized at proper operating temperatures. Even though it is possible to have temperatures at 600F within minutes after a fire has been started, if the fire is allowed to die down immediately it may go out or the combustor may stop working. Once the combustor starts working, heat generated in it by burning the smoke will keep it working. During re-fueling and rekindling of the cool fire, or a fire that has burned down to the charcoal phase, operate the stove at a medium to high firing rate for about 10 minutes to ensure that the catalyst reaches operating temperatures.

   WARNING: Never build a roaring fire in a cold stove. Always warm your stove up slowly!

5. When re-fueling, always open by-pass, load fuel, then wait for at least 10-15 minutes before closing the by-pass. Reason for the 10-15 min. is the fresh fuel and the opening of the door will cause the catalyst to drop in temperature as well as the moisture within the wood which is the first thing to be released.

6. During the first few fires, keep the combustion rate at a moderate level and avoid a large fire. Only after 5 or 6 such fires can you operate the stove at its maximum setting, and only after the metal has been warmed.

7. For the first few days, the stove will give off an odour from the paint. This is to be expected as the high temperature paint becomes seasoned. Windows and/or doors should be left open to provide adequate ventilation while this temporary condition exists. Burning the stove at a very high temperature the first few times may damage the paint. Burn fires at a moderate level the first few days.

8. Do not place anything on the stove top during the curing process. This may result in damage to your paint finish.

9. During the first few days it may be more difficult to start the fire. As you dry out your firebrick and your masonry flue, your draft will increase.

10. For those units installed at higher elevations or into sub-standard masonry fireplaces, drafting problems may occur. Consult an experienced dealer or mason on methods of increasing your draft.

11. Some cracking and popping noises may be experienced during the heating up process. These noises will be minimal when your unit reaches temperature.

12. Before opening your door to reload, open the by-pass damper fully for approximately 10 to 15 seconds until the fire has been re-established. This will minimize any smoking (spilling) back into the room. After loading wood and front door closed, close the by-pass damper

13. All fuel burning appliances consume oxygen during operation. It is important that you supply a source of fresh air to your unit while burning. A slightly opened window is sufficient for the purpose. If you also have a fireplace in your home, a downdraft may be created by your Regency Stove causing a draft down your chimney. If this occurs, slightly open a window near your unit.

CAUTION: If the body of your unit, e or any part of the chimney connector starts to glow, you are over firing. Stop loading fuel immediately and close the draft control until the glow has completely subsided.

14. Green or wet wood is not recommended for your unit. If you must add wet or green fuel, open the draft control fully until all moisture has been dispersed by the intense fire. Once all moisture has been removed, the draft control may be adjusted to maintain the fire.

15. If you have been burning your stove on a low draft, use caution when opening the door. After opening the damper, open the door a crack, and allow the fire to adjust before fully opening the door.

How to Light and Maintain a Wood Stove Fire

16. The controls of your unit or the air supply passages should not be altered to increase firing for any reason.

17. If you burn the unit too slowly or at too low a setting your unit will not be operating as efficiently as it can. An easy rule of thumb says that if your glass is clean, catalytic thermostat is active, then your flue is clean and your exhaust is clean. Burn the stove hot enough to keep your glass clean and catalytic combustor ,you won't need to clean your flue as often.

FAN OPERATION

Automatic
To operate the fan automatically, push the bottom switch on the side of the fan housing to "AUTO" and the top switch to either "HIGH" or "LOW" for fan speed.

This will allow the fan to turn on as the stove has come up to operating temperature. It will also shut the fan system off after the fire has gone out and the unit cooled to below a useful heat output range.

Route power cord to either left or right behind unit.

Manual
To manually operate the fan system push the bottom switch to "MAN" and the top switch to either "HIGH" or "LOW". This will bypass the sensing device and allow full control of the fan.

Switching from "AUTO" to "MAN" or "HIGH" to "LOW" may be done anytime.

ASH DISPOSAL

During constant use, ashes should be removed every few days. The Ash Drawer option features a convenient ash dump for easy removal of ash, refer to Modular Installation Options section.

Safety Precautions

1. Do not allow ashes to build up to the loading doors! Only remove ashes when the fire has died down. Even then, expect to find a few hot embers.

2. Please take care to prevent the build-up of ash around the start-up air housing located inside the stove box, under the loading door lip.

3. Never start a fire if the ash plug and ash drawer are not in place. This will cause over firing which can cause excessive warping of the stove. Evidence of over firing can void the warranty on your stove.

4. The firebricks are brittle and can be damaged if the plug is replaced carelessly or pieces that are too large are forced through the hole.

Ash Drawer Operating Guideline

1. Only clean ashes out of the stove when the unit has cooled down. Remove the plug by lifting on the handle using the tool provided. The plug may still be warm, use caution. Push the ashes down the hole into the ash drawer, the large pieces can be left in the firebox and burned during the next fire or removed through the door opening.

2. Always leave 1/2 to 1 inch of ash in the bottom of the firebox. This helps in easier starting and a more uniform burn of your fire. Replace ash plug when ashes have been removed.

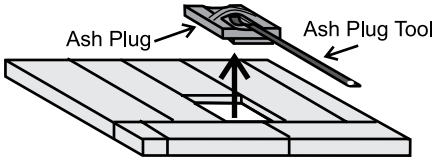

3. **Pedestal Units:**
To remove the drawer, lift slightly and slide it out. When the drawer is completely out, slide the cover plate over the ash drawer and carry away.

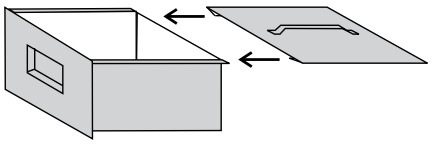

HOT WHILE IN OPERATION. KEEP CHILDREN, CLOTHING AND FURNITURE AWAY. CONTACT MAY CAUSE SKIN BURNS.

4. When emptying the ash drawer, make sure the ashes are cold. Ashes should be placed in a metal container with a tight fitting lid. The closed container of ashes should be placed on a non-combustible floor or on the ground, well away from all combustible materials, pending final disposal. If the ashes are disposed of by burial in soil or otherwise locally dispersed, they should be retained in the closed container until all cinders have thoroughly cooled. Other waste should not be placed in the ash container.

5. Before putting the ash drawer back into place, make sure the ash plug is back in place.

   Pedestal Units: make sure the cover lid is off.

SAFETY GUIDELINES AND WARNINGS

DO NOT USE CHEMICALS FOR FLUIDS TO START FIRE.

1. Never use gasoline, gasoline type lantern fuels, kerosene, charcoal lighter fuel, or similar liquids to start or 'freshen up' a fire in your heater. Keep all such liquids well away from the heater while it is in use.

2. Keep the door closed during operation and maintain all seals in good condition.

3. Do not burn any quantities of paper, garbage, and never burn flammable fluids such as gasoline, naptha or engine oil in your stove.

4. If you have smoke detectors, prevent smoke spillage as this may set off a false alarm.

5. Do not overfire heater. If the chimney connector, flue baffle or the stove top begin to glow, you are over firing. Stop adding fuel and close the draft control. Over firing can cause extensive damage to your stove including warping and premature steel corrosion. Over firing will void your warranty.

6. Do not permit creosote or soot build-up in the chimney system. Check and clean chimney at regular intervals. Failure to do so can result in a serious chimney fire.

7. Your Regency stove can be very hot. You may be seriously burned if you touch the stove while it is operating, keep children, clothing and furniture away. Warn children of the burn hazard.

8. The stove consumes air while operating, provide adequate ventilation with an air duct or open a window while the stove is in use.

9. Do not connect this unit to a chimney flue serving another appliance.

10. Do not use grates or andirons or other methods for supporting fuel. Burn directly on the bricks.

11. Open the draft control fully for 10 to 15 seconds prior to slowly opening the door when refuelling the fire.

12. Do not connect your unit to any air distribution duct.

13. This heater is designed to burn natural wood only. Higher efficiencies and lower emissions generally result when burning air dried seasoned hardwoods, as compared to softwoods or to green or freshly cut hardwoods.

DO NOT BURN:

- Treated wood
- Coal
- Garbage
- Cardboard
- Solvents
- Colored Paper
- Trash
- Salt drift wood
- Cut lumber, plywood, mill ends.

Burning treated wood, garbage, solvents, colored paper or trash may result in release of toxic fumes and may poison or render ineffective the catalytic combustor. Burning coal, cardboard, or loose paper can produce soot, or large flakes of char or fly ash that can coat the combustor, causing smoke spillage into the room, and rendering the combustor ineffective.

14. Do not store any fuel closer than 2 feet from your unit. Do not place wood, paper, furniture, drapes or other combustibles near the appliance.

15. WARNING: Do not operate without either the Ash Plug properly seated or the Ash Dump Plates screwed in place, excessive temperatures will result.

16. Do not operate with broken glazing.

DO NOT BURN GARBAGE OR FLAMMABLE LIQUIDS SUCH AS GASOLINE, NAPTHA OR ENGINE OIL. SOME FUELS COULD GENERATE CARBON MONOXIDE AND ARE VERY DANGEROUS.

CAUTION: DO NOT CONNECT TO, OR USE IN CONJUNCTION WITH ANY AIR DISTRIBUTION DUCT WORK UNLESS SPECIFICALLY APPROVED FOR SUCH INSTALLATION.

	Troubleshooting Guide	
PROBLEM	**POSSIBLE CAUSE**	**SOLUTION**
Crumbling Substrate	Extreme Thermal Shock Refueling with Wet Wood High Draft	Bypass combustor when the stove is running Use seasoned, dried wood. Do not exceed .06" of water draft. Install a manual damper and draft gauge or a barometric damper.
Fly-Ash Build-up Fly-Ash Masking Fly-ash Plugging	Combustor has not maintained light-off temperature. Combustor has not maintained light-off temperature. Burning materials that produce a lot of char and fly-ash. Closing the bypass too soon	Brush cold combustor with a soft bristled brush or vacuum lightly. Brush cold combustor with a soft bristled brush or vacuum lightly. Do not burn cardboard, gift wrap or garbage. Follow instructions for proper light-off.
Thermal Cracking	Uneven temperatures, flame impingement and heat spikes.	If cracking causes large pieces to fall out, replace combustor.
Mechanical Cracks	Combustor mishandled or abused. Distortion of combustor holder.	Handle combustor with care. Replace if necessary. Replace combustor is large pieces are missing, replace any warped stove parts as well.
Plugging (Creosote)	Burning wet, pitchy woods or burning large loads of small diameter wood with the combustor in the operating position without light-off ever occurring.	Burn dried seasoned wood. Make sure combustor has light-off before closing the bypass damper. It may be possible to burn off the soot or creosote accumulation by putting the combustor in a partially open and partially closed position after a hot fire has been started.
Masking (Soot)	Combustor has not maintained a light-off. Burning coal will cause a sulfur-based compound to coat the catalyst.	Place combustor in a partially open and partially position after a hot fire has been started to burn off the soot accumulation. Revert to burning wood and fire the combustor to elevated temperatures for one hour.

MAINTENANCE

It is very important to carefully maintain your fireplace stove, including burning seasoned wood and maintaining a clean stove and chimney system. Have the chimney cleaned before the burning season and as necessary during the season, as creosote deposits may build up rapidly. Moving parts of your stove require no lubrication.

THERMOMETER

The catalyst thermometer is only a indication of the flue gas temperature as they pass through the catalyst. The thermostat probe that is inserted into the opening, must be cleaned at least once a year. Use 220 sand paper to clean probe.

CREOSOTE

When wood is burned slowly, it produces tar and other organic vapours combine with moisture to form creosote. The creosote vapours condense in the relatively cool chimney flue of a slow burning fire. As a result, creosote residue accumulates on the flue lining. When ignited, this creosote can result in an extremely hot fire.

The chimney connector and chimney should be inspected at least once every two months during the heating season to determine if creosote build up has occurred. If creosote has accumulated it should be removed to reduce the risk of chimney fire.

WARNING: Things to remember in case of a chimney fire:

1. Close all draft and damper controls.

2. CALL THE FIRE DEPARTMENT.

Ways to Prevent and Keep Unit Free of Creosote

1. Burn stove with the draft control wide open for about 10-15 minutes every morning during burning season.

2. Burn stove with draft control wide open for about 10 - 15 minutes every time you apply fresh wood. This allows the wood to achieve the charcoal stage faster and burns up any unburned gas vapours which might otherwise be deposited within the system.

3. **Only burn seasoned wood!** Avoid burning wet or green wood. Seasoned wood has been dried at least one year.

4. A small hot fire is preferable to a large smouldering one that can deposit creosote within the system.
5. The chimney and chimney connector should be inspected at least once every two months during the heating season to determine is a creosote buildup has occurred.

6. **Have chimney system and unit cleaned by competent chimney sweeps twice a year during the first year of use and at least once a year thereafter or when a significant layer of creosote has accumulated (3 mm/1/8" or more) it should be removed to reduce the risk of a chimney fire.**

DOOR CATCH ADJUSTMENT

The door Catch may require adjustment as the door gasket compresses after a few fires. The door latch compression may require adjustment to renew seal. Removal of the spacer washer, (see page 28), will allow the latch to be moved closer to the door frame, causing a tighter seal. Remove and replace the nuts, washer and spacer as shown on in this manual.

DOOR GASKET

If the door gasket requires replacement 5/8" diameter material must be used. Regency uses a gasket rope 5/8" Medium Density (Part #936-060). A proper high temperature gasket adhesive is required. See your Regency Dealer.

GLASS MAINTENANCE

Your Regency stove is supplied with 5mm Neoceram ceramic glass (Part #943-384/P) that will withstand the highest heat that your unit will produce. In the event that you break your glass by impact, purchase your replacement from an authorized Regency dealer only, and follow our step-by-step instructions for replacement (refer to Glass Replacement section).

Allow the stove to cool down before cleaning the glass, do not clean the glass when it is hot. Cleaning the glass will prevent build up of carbon and allow full view of the fire.
Do not use abrasive cleaners, a damp cloth and glass cleaner is effective.

WOOD STORAGE

Store wood under cover, such as in a shed, or covered with a tarp, plastic, tar paper, sheets of scrap plywood, etc., as uncovered wood can absorb water from rain or snow, delaying the seasoning process.

GLASS REPLACEMENT

Allow the stove to cool before removing or replacing glass. Remove the door from the stove and remove the glass retainer. To avoid injury use caution when removing broken glass. Wear safety gloves. When placing the replacement glass in the door, make sure that the glass gasketing will properly seal your unit. Replace the retainer, it should rest on the gasket not the glass, and tighten securely with a glass clips and screws. Do not wrench down on the glass as this may cause breakage.

Do not use substitute materials. If your glass does break, do not use your unit until it has been replaced.

Do not abuse the door by striking or slamming shut.

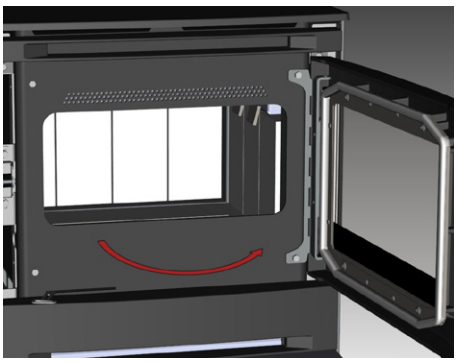

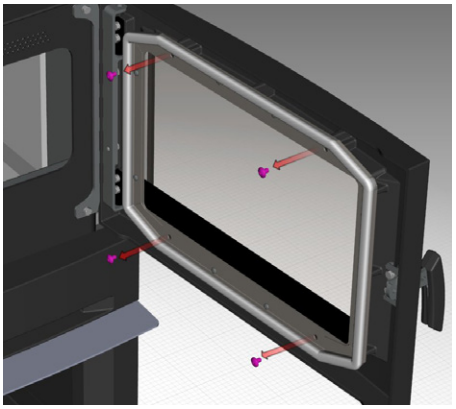

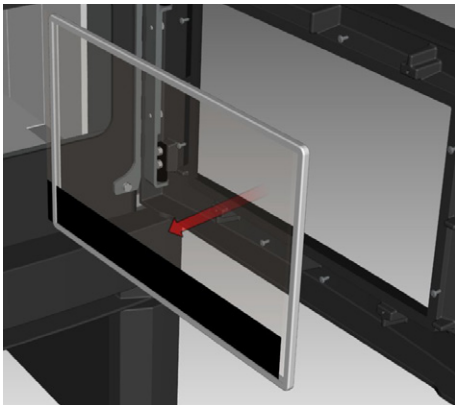

CATALYTIC COMBUSTOR

ACHIEVING AND MAINTAINING CATALYST LIGHT-OFF:
The temperature in the stove and the gases entering the combustor must be raised to between 500F to 700F for catalytic activity to be initiated. During the start up of a cold stove a medium to high firing rate must be maintained for about 30 minutes. This ensures that the stove, catalyst and fuel are all stabilized at proper operating temperatures. Even though it is possible to have temperatures at 600F within minutes after a fire has been started, if the fire is allowed to die down immediately it may go out or the combustor may stop working. Once the combustor starts working, heat generated in it by burning the smoke will keep it working. During re-fueling and rekindling of the cool fire, or a fire that has burned down to the charcoal phase, operate the stove at a medium to high firing rate for about 10 minutes to ensure that he catalyst reaches operating temperatures.

There are some obvious signs of trouble that your inspection may reveal. The temperature in the stove and the gases entering the combustor must be raised to between 500F to 700F for catalytic activity to be initiated. During the start up of a cold stove a medium to high firing rate must be maintained for about 30 minutes. This ensures that the stove, catalyst and fuel are all stabilized at proper operating temperatures. Even though hit is possible to have temperatures at 600F within minutes after a fire has been started, if the fire is allowed to die down immediately it may go out or the combustor may stop working. Once the combustor starts working, heat generated in it by burning the smoke will keep it working. During re-fueling and rekindling of the cool fire, or a fire that has burned down to the charcoal phase, operate the stove at a medium to high firing rate for about 10 minutes to ensure that he catalyst reaches operating temperatures.

CATALYST MONITORING: It is important to periodically monitor the operation of the catalytic combustor to ensure that it is functioning properly and to determine when it needs to be replaced. A non-functioning combustor will result in a loss of heating efficiency, and an increase in creosote and emissions. Following is a list of items that should be checked on a periodic basis.

- Combustors should be visually inspected at least three times during the heating season to determine if physical degradation has occurred. Actual removal of the combustor is not recommended unless more detailed inspection is warranted because of decreased performance. If any of these conditions exist, refer to Catalyst trouble shooting section of this owner's manual.

- A good combustor is designed to withstand approximately 12,000 hours of continuous use. This will translate into five to ten years of use, depending on the length of your heating season and how often you use your stove. Proper maintenance will increase the combustor's effectiveness and prevent many problems. Inspect your combustor before each heating season, and during the season if your stove's performance seems to change.

- This catalytic heater is equipped with a temperature probe to monitor catalyst operation. Properly functioning combustors typically maintain temperatures in excess of 500F and often reach temperatures in excess of 1000F. If catalyst temperatures are not in within, refer to Catalyst trouble shooting section of this manual.

- You can get an indication of whether the catalyst is working by comparing the amount of smoke leaving the chimney when the smoke is going through the combustor and catalyst light – off has been achieved, to the amount of smoke leaving the chimney when the smoke is not routed (by-pass open) through the combustor.

Step 1: Light the stove in accordance with instructions within this manual.
Step 2: With smoke routed through the catalyst (by-pass closed) go outside and observe the emissions leaving the chimney.
Step 3: Engage the bypass mechanism and move to by-pass open position. And again observe the emission leaving the chimney. Significantly more smoke should be seen when the smoke is not routed through the combustor (by-pass open). Be careful not to confuse smoke with steam.

ACHIEVING PROPER DRAFT: Draft is the force which moves air from the appliance up through the chimney. The amount of draft in your chimney depends on the length of the chimney, local geography, nearby obstructions and other factors. Too much draft may cause excessive temperatures in the appliance and may damage the catalytic combustor. Inadequate draft may cause back puffing into the room and plugging of the chimney or catalyst.

CATALYTIC COMBUSTOR CLEANING:

Method #1
A vacuum cleaner may be used, but **never use high pressured air** to blow the cells free of any build-up. This can damage the cell walls. Any cell blockage can be removed with the use of a pipe cleaner or a cotton swab as well.
Method #2
Should the combustor's cells become covered with fly-ash, use a paint-brush or soft-bristled brush and dust the combustor gently. Never use anything abrasive to clean the combustor.
Method #3
Normally the catalytic combustor requires little or no maintenance, it generates such high temperatures and therefore is basically self-cleaning. However, should the combustor become covered with soot or creosote, it is possible to burn the accumulation off by opening the bypass and building a hot fire. Once the hot fire is created, close the bypass halfway and burn for 30 to 60 minutes with the bypass left in this position. **Never use cleaning solvents to clean it.** Check and clean the combustor, if necessary, before each burning season and inspect the flue system for any signs of creosote buildup. A clean flue helps prevent chimney flue fires.

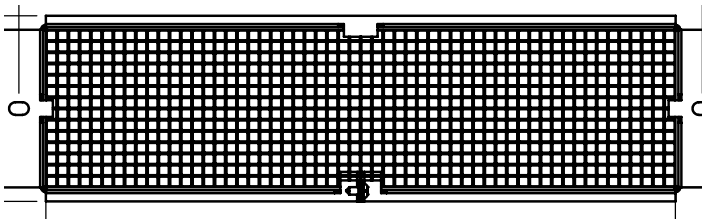

F5200 Flameguard & Catalyst

COMBUSTOR ASSEMBLY REMOVAL / REPLACEMENT:

The catalytic thermometer on top of the stove should read in the active zone after the stove has been in operation for several hours. If the thermometer's indicator needle does not stay in the active zone, even with a hot fire, over a period of regular use, the catalyst may need to be cleaned. If this persists it may be necessary to replace it.

If the combustor must be examined or replaced, follow this procedure:

1. Allow the stove to burn out and cool down.

2. Open the door and loosen the two 7/16" bolts -see locations below.

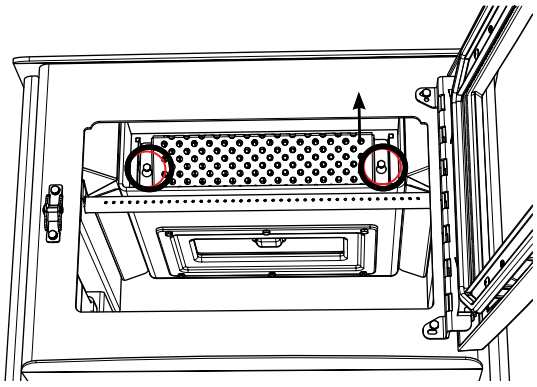

3. Lift flame shield slightly upwards in keyhole slot and pull it forward and down.

4. Use a pair of pliers and gently slide out the band at each end. The assembly will loosen enough that it can be pulled forward, lowered, and pulled out through the door.

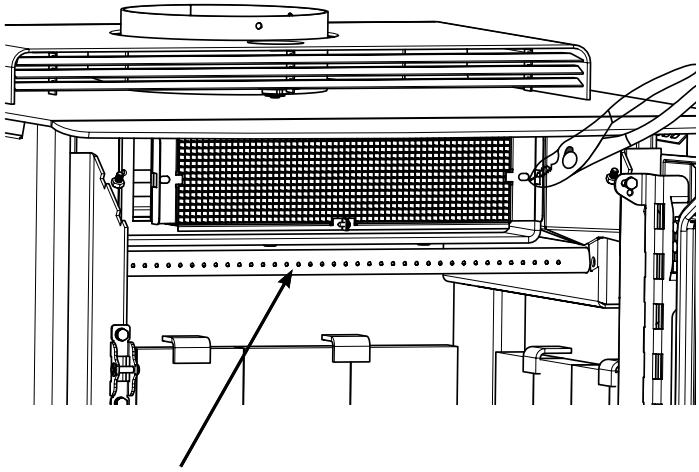

F5200 Airtube

F5200 Airtube Replacement

NOTE: If also replacing the gasket in the bypass door (see next page), remove the lid of the bypass door while it is accessible and complete steps in Bypass Door Gasket Replacement.

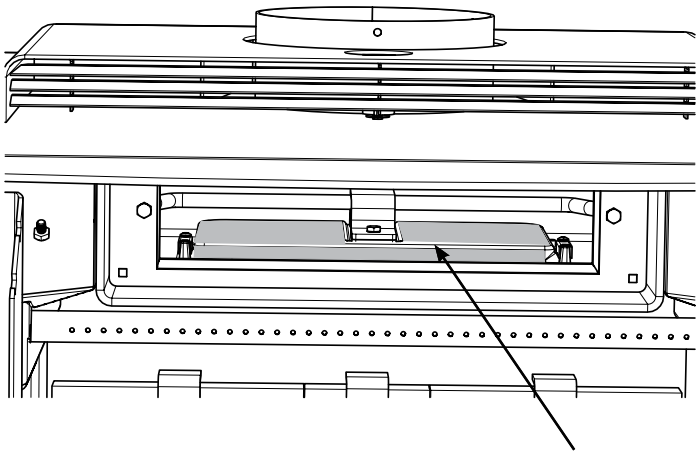

Lid for Bypass Door

TO REPLACE THE COMBUSTOR:

First clean the combustor area and the area around the by-pass,use a vacuum cleaner.

Lift the new combustor into position, with the stainless flanges on each end facing forward.
The combustor should slide easily into position, you may need to pinch down the top center with your finger to start, gently push as far to the back of the stove as possible.

Replace the flame shield in the orientation shown below.

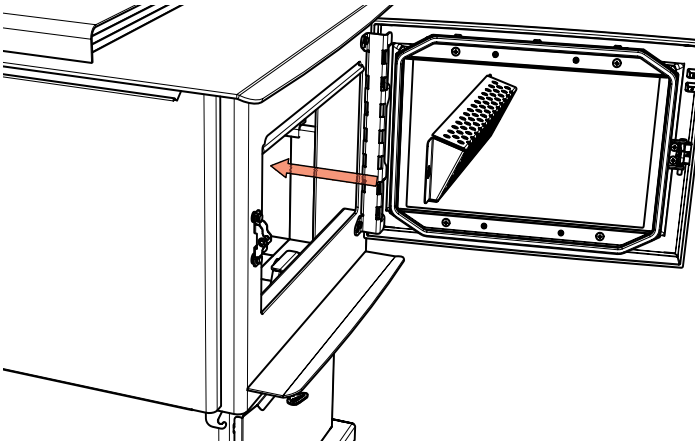

Lift it into position, place the key slot opening over the bolt and push the flame shield down to seat. Tighten the bolt till its SNUG only, do not over tighten. The flame shield should rest at an angle (about 45 degrees) with the thin end at the bottom and the thick end near the top of the stove.

NOTE: Replacement combustors can be retrieved from Applied Ceramics or Contact your local Regency Dealer for details.

DO NOT OPERATE THE APPLIANCE IF COMBUSTOR BECOMES INACTIVE - DO NOT OPERATE WITHOUT COMBUSTOR.

BYPASS DOOR GASKET REPLACEMENT

1. Allow the stove to burn out and cool down, until cool to touch.

2. Open stove door to access bypass door.

3. Loosen the 3 rear nuts, then remove 3 front nuts. Support the Bypass Door from the front /back and slide forward to remove Bypass Door Assembly.

Note: if any of the bolts become damaged, the bolt bracket assemblies may be replaced—see next page.

Important: Bypass door is very heavy (>18 lbs) - use caution when servicing.

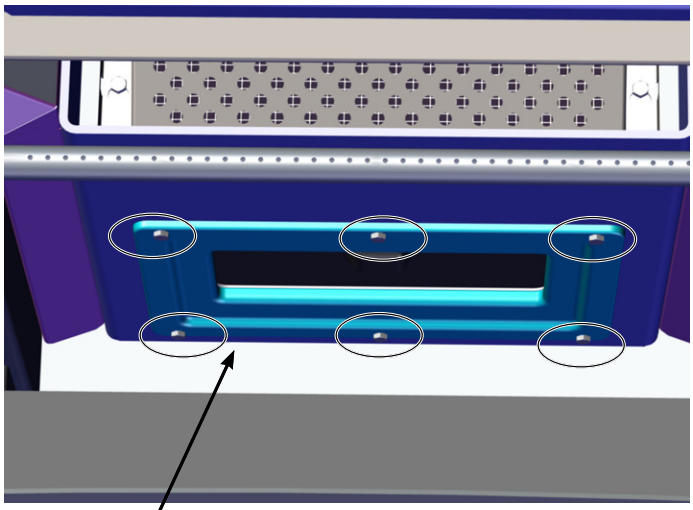

Loosen 3 rear nuts

F3500 Damper Assembly Draft

4. Slide bypass door assembly forward, lower complete assembly with care. Lift lid on bypass door assembly to reveal gasket.

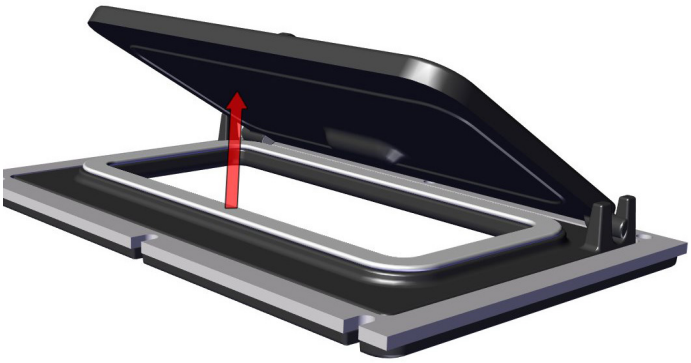

5. Remove old gaskets and replace with new ones.

6. Reverse steps to reinstall - ensure the pass rod is seated with the channel on the pass door.
(Unit viewed as transparent to facilitate view)

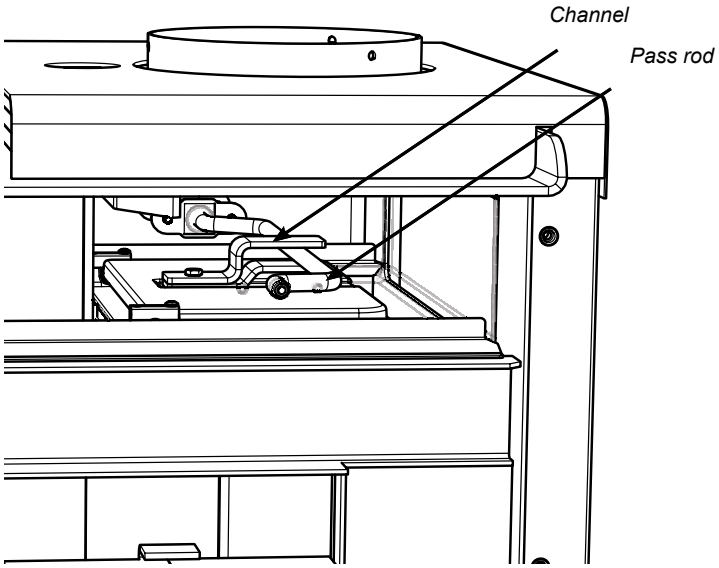

BYPASS DOOR BOLT BRACKET ASSEMBLY REPLACEMENT

If any of the bolts used to secure the bypass door become damaged - the bypass door bolt bracket assembly can be replaced.

1. Allow the stove to burn out and cool down, until cool to touch.

2. Remove bypass door before attempting to remove bolt bracket assembly—see detailed instructions on previous page.

3. Open stove door and remove stainless steel smoke deflector, flame shield and catalytic combustor to access bypass door—see detailed instructions in this manual.

4. Lift out (front or rear) bypass door bolt bracket assembly and replace with a new one.

Note: The rear nuts which are only loosened when removing the by pass door will need to be removed in order to remove the bolt bracket assembly.

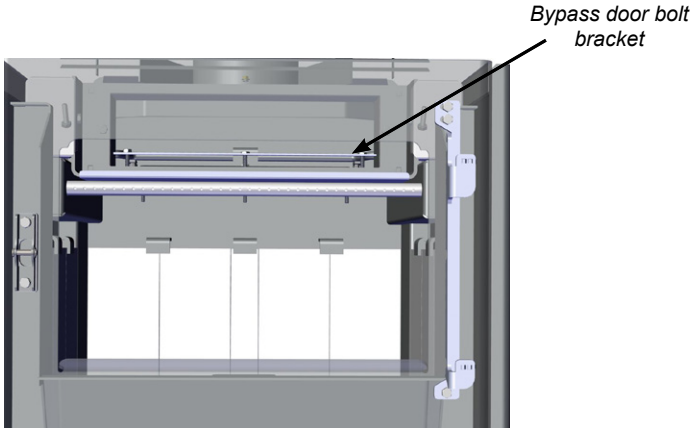

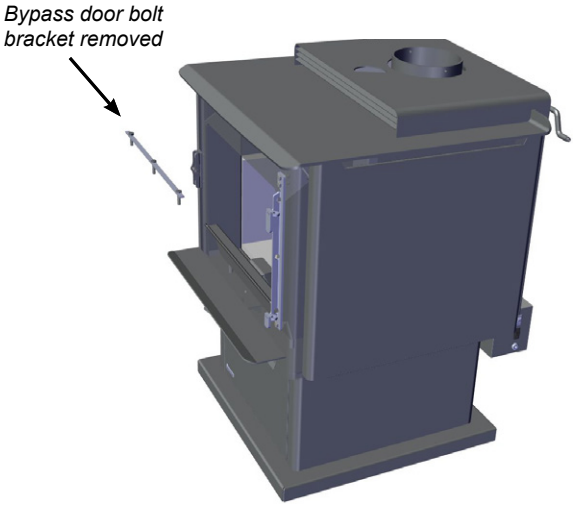

5. Reverse steps to reassemble stove.

SECONDARY AIR TUBE REMOVAL / INSTALLATION

1. Allow the stove to burn out and cool down, until cool to touch.

2. Open stove door to access secondary air tube.

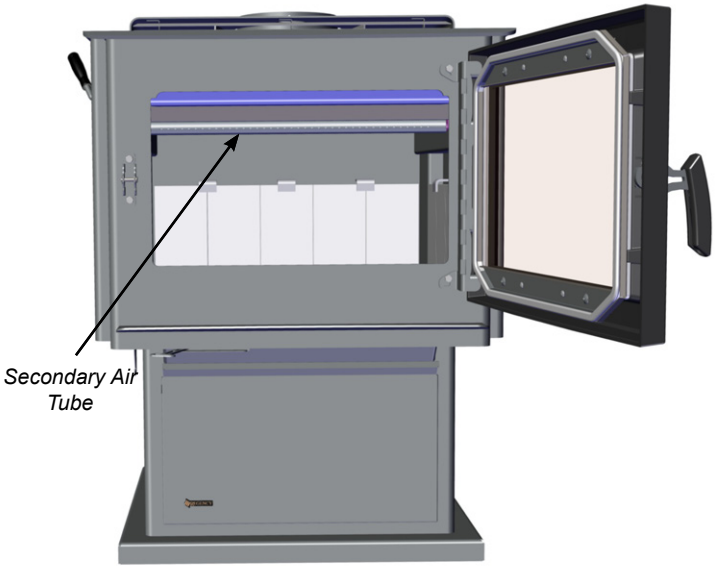

3. Grasp secondary air tube firmly with vise grips, using a hammer tap vise grips from right to left until air tube is released from grip. Remove.

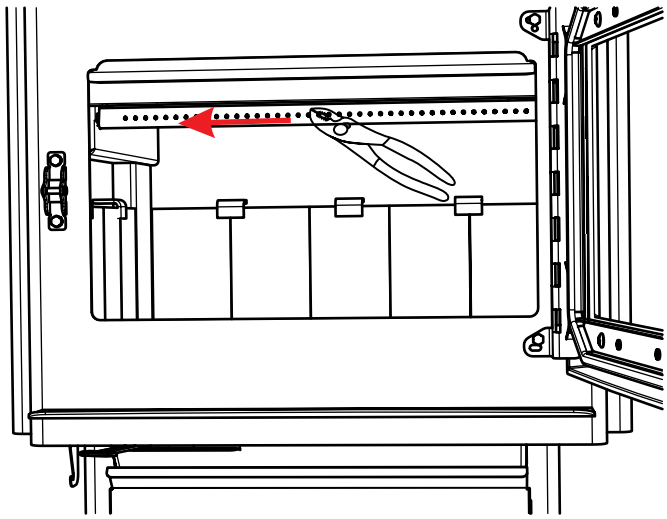

4. To reinstall or replace, first slide left side of tube into hole on left side air channel. Align tab on right side air channel with notch on right hand end of air tube. Firmly grip center of air tube with vise grips, use hammer to tap vise grips from left to right until the tube bottoms out into the air channel on right.

F5200 Airtube Replacement

SIDE BAFFLE INSTALLATION / REMOVAL

1. Allow the stove to burn out and cool down.

2. Open stove door and bring the side baffle into the stove in the orientation shown below.

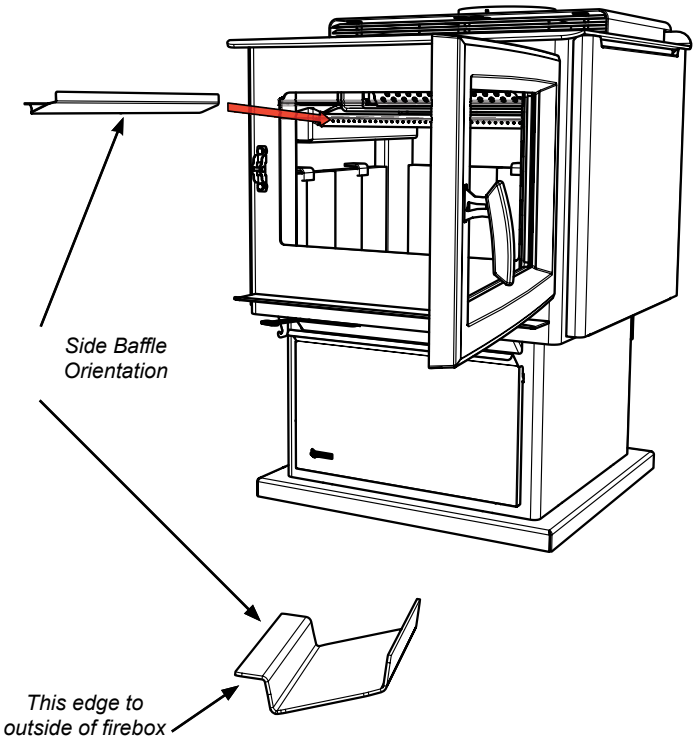

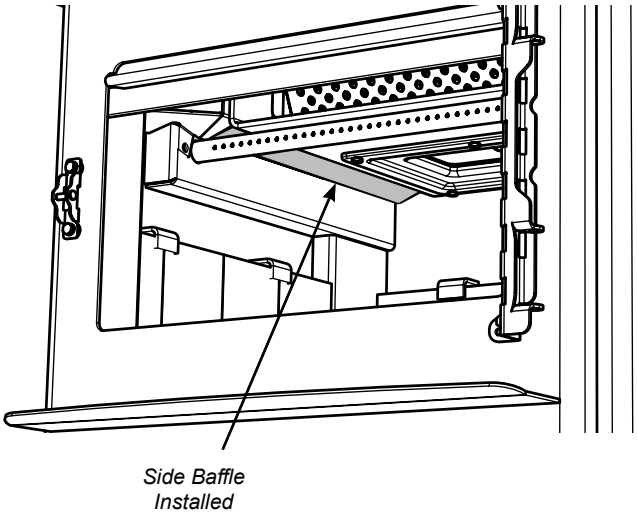

3. Manoeuvre the side baffle underneath the upper corner filler, then let the baffle rest on the side of the combustor housing.

4. Repeat process on other side.

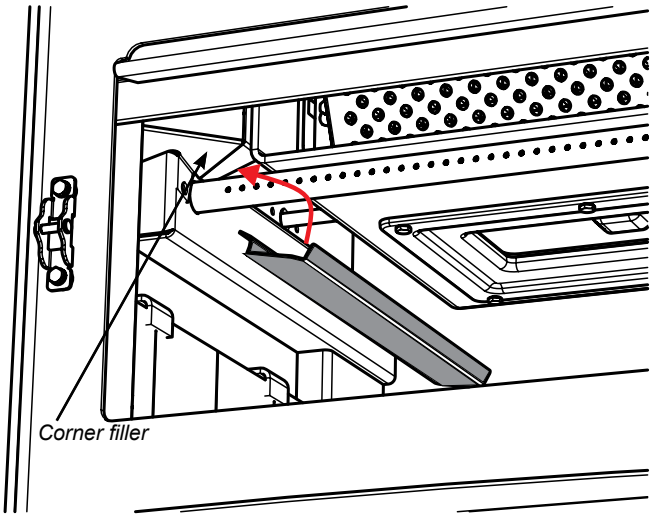

DOOR CATCH ADJUSTMENT

The door catch may require adjustment as the door gasket compresses after a few fires. The door catch compression may require adjustment to renew seal. Removal of the spacer washer, shown in the Diagram below, will allow the catch to be moved closer to the door frame, causing a tighter seal. Remove and replace the nuts, washer and spacer as shown

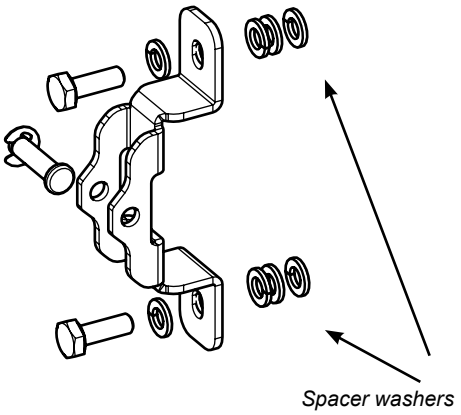

DOOR HINGE ADJUSTMENT

If the door hinge ever requires adjustement, ensure that the bolt is put on hand tight and tightened a further 1/2 turn using a wrench.
Do not overthighten as this can damage the bolt or nutsert.

Note: Some models may only have 1 bolt at the top. This version shows 2 top bolts.

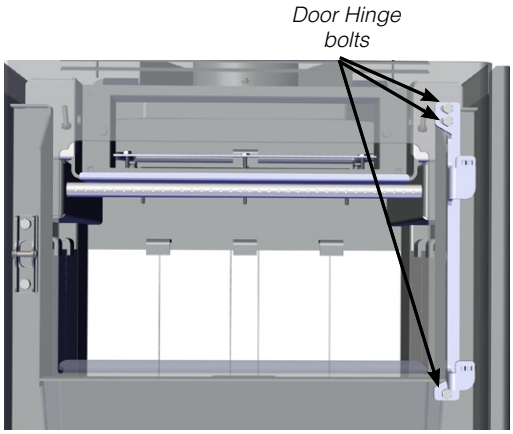

Annual Maintenance	
Completely clean out entire unit	Annually
Inspect air tube, Catalytic Combustor and bricks	Replace any damaged parts.
Adjust door catch assembly	If unable to obtain a tight seal on the door - replace door gasket seal. Readjust door catch after new gasket installed.
Inspect condition and seal of: Glass Gasket Door Gasket	Perform paper test - replace gasket if required
Paper Test	Test the seal on the loading door with a paper bill. Place a paper bill in the gasket area of the door on a cold stove. Close the door. Try to remove the paper by pulling. The paper should not pull out easily, if it does, try adjusting the door latch, if that doesn't solve the problem replace the door gasket.
Check and lubricate door hinge + latch	Use only high temperature anti seize lube. (ie. never seize)
Check glass for cracks	Replace if required.
Clean blower motor	Disconnect power supply. Remove and clean blower. ***DO NOT LUBRICATE***
Inspect and clean chimney	Annual professional chimney cleaning recommended.

F5200 STOVE MAIN ASSEMBLY

	Part #	Description
1	051-539	Cast Door Assembly
2	156-004	Side Heat Shield RH
3	051-005	Side Heat Shield LH
4		Firebox Assembly
5	051-513	Pedestal Assembly
6	051-515	Rear Heat Shield Assembly
7	051-912	Airmate 8"
8	846-515	Fan-Free Standing Stove
	910-157/P	Replacement Motor
	910-138	Auto/Manual Switch
	910-140	Hi/Off/Lo switch
	910-142	Fan Thermodisc

	Part #	Description
9	051-538	Removable Arm Assembly
10	051-018	Handle Holder
	051-530	Catalytic Combustor Assembly (not shown)
	063-954	Airtube 1" x 23" long
11	051-067	Thermometer
	051-221	Cast Bypass Door
	936-074	Gasket Bypass Door (per foot)
12	051-003	Stainless Steel Smoke Deflector
13	051-509	Door Hinge Assembly
14	106-561	Door Catch assembly
15	156-241	Removable Cast Handle
	051-006	L/R stainless steel firebox filler
	051-085	Gasket Bypass Frame
	051-510	Bypass Frame 3 bolt assembly (ea)
	919-550	Manual

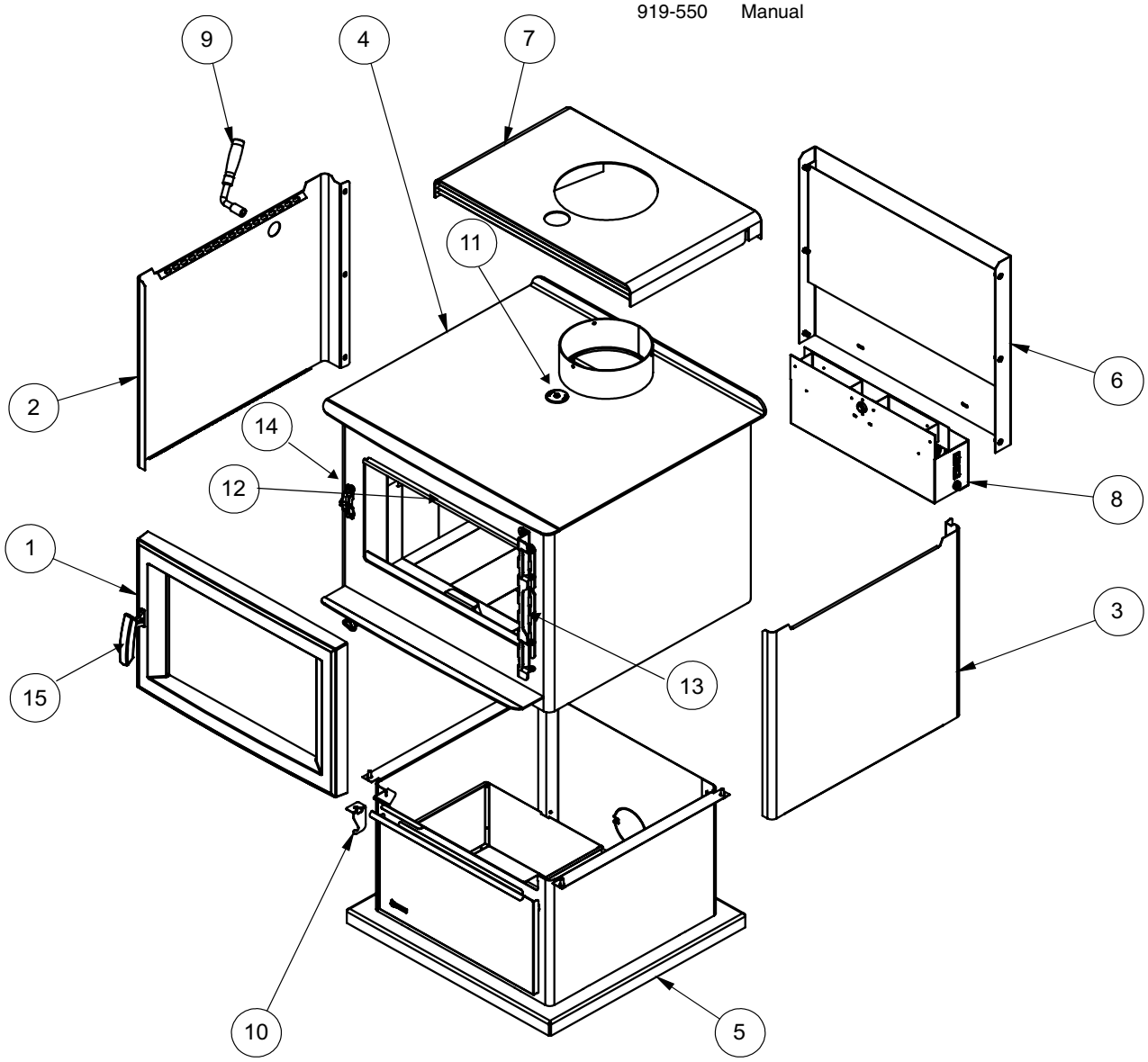

F5200 STOVE BRICK LAYOUT

051-960 Brick Set Complete

Fire bricks	
#	Size
1	4-1/2" x 9"
2	2" x 9"
3	3-1/2" x 4-1/2"
4	1-3/4" x 4-1/2"
5	2" x 7"

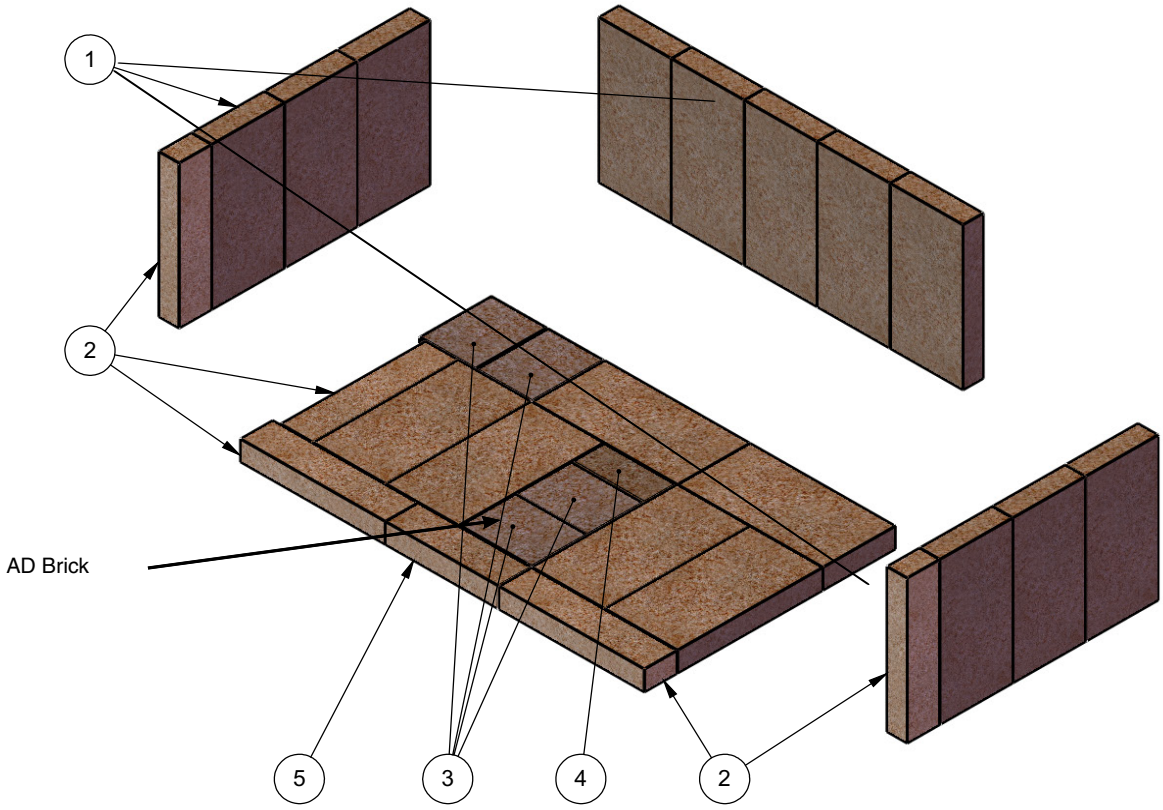

DOOR ASSEMBLY

	Part #	Description
1	156-514	REMOVABLE CAST HANDLE ASSEMBLY
2	051-515/P	ALIGNER ASSEMBLY
3	051-231	CAST DOOR METALLIC BLACK
4	948-155	HINGE PIN
5	940-384/P	GLASS CERAMIC
6	936-243	TAPE 7/8 WINDOW ADHESIVE

	Part #	Description
7	051-058	GASKET BRACKET TOP/BOTTOM
8	051-056	GLASS / GASKET FRAME
9	936-077	5/8 MEDIUM DENSITY (936-077)
10	904-809	SCREW 1/4-20 x 3/8 TUSS HD PHIL ZINC PD (ea)
11	904-146	SCREW #10 x 1/2 SELF TAP PAN HD PHILIPS (ea)
12	0904-513	HEX BOLT 1/4-20 x 3/4 LG. (ea)
	051-057	SIDE GASKET BRACKET (ea)

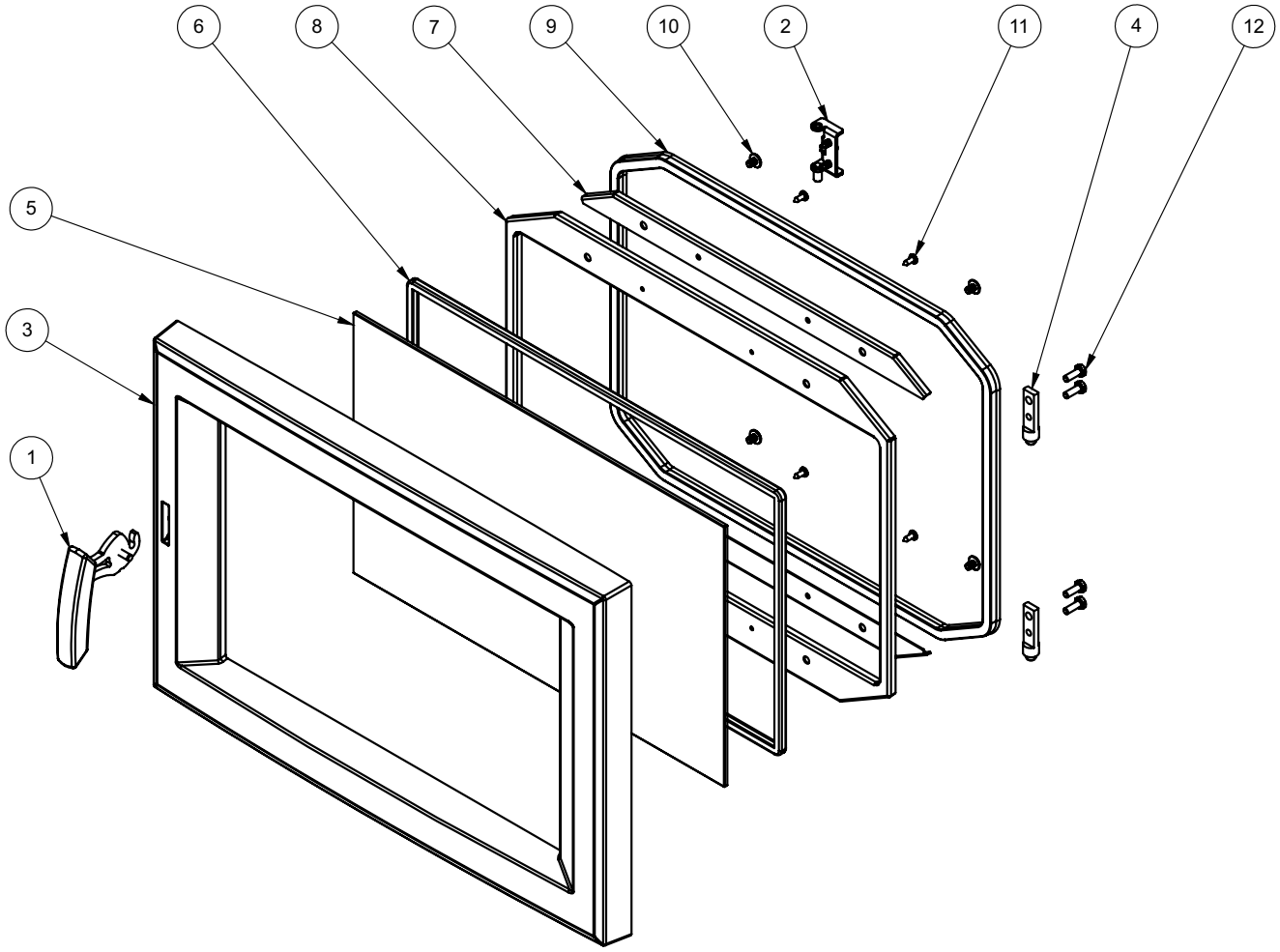

Limited Lifetime Warranty

FPI Fireplace Products International Ltd. (for Canadian customers) and Fireplace Products U.S., Inc. (for U.S. customers) (collectively referred to herein as "FPI") extends this Limited Lifetime Warranty to the original purchaser of this appliance provided the product remains in the original place of installation. The items covered by this limited warranty and the period of such coverage is set forth in the table below.

Some conditions apply (see below).

The policy is not transferable, amendable or negotiable under any circumstances.

Wood Products	Component Coverage					Labor Coverage
Components Covered	Limited Lifetime	5 years	2 years	1 year	Warranty	(Years)
Welded Firebox Steel	✓					5
All Stainless Steel Components, Smoke Deflectors, Heat Shields etc.	✓					3
Air Tubes	✓					3
Airmate	✓					3
Door handle and latch assembly, all hardware	✓					3
Glass Thermal Breakage Only	✓					3
Steel Faceplates, Accessory Housings	✓					3
All Plating	✓					3
Ash Drawer, Heatshields, Pedestal	✓					
All Baffles, Steel, Ceramic, Vermiculite C-Baffles	✓					
All castings, firebox, surrounds, doors, panels etc.		✓				3
All Electrical, Blower, wiring, switches etc.			✓			2
Glass - Crazing				✓		1
Catalyst Combustor					*10 Years Prorated	
Venting/Chimney				✓		1
Screens				✓		1

*See specific warranty details in regards to the catalyst combustor in this manual.

Conditions:

Warranty protects against defect in manufacture or FPI factory assembled components only, unless herein specified otherwise.

Any part(s) found to be defective during the warranty period as outlined above will be repaired or replaced at FPI's option through an accredited distributor, dealer or pre-approved and assigned agent provided that the defective part is returned to the distributor, dealer or agent for inspection if requested by FPI. Alternatively, FPI may at its own discretion fully discharge all of its obligations under the warranty by refunding the verified purchase price of the product to the original purchaser. The purchase price must be confirmed by the original Bill of Sale.

The authorized selling dealer, or an alternative authorized FPI dealer if pre-approved by FPI, is responsible for all in-field diagnosis and service work related to all warranty claims. FPI is not responsible for results or costs of workmanship of unauthorized FPI dealers or agents in the negligence of their service work.

At all times FPI reserves the right to inspect reported complaints on location in the field claimed to be defective prior to processing or authorizing of any claim. Failure to allow this upon request will void the warranty.

All warranty claims must be submitted by the dealer servicing the claim, including a copy of the Bill of Sale (proof of purchase by you). All claims must be complete and provide full details as requested by FPI to receive consideration for evaluation. Incomplete claims may be rejected.

Replacement units are limited to one per warranty term. Airtube and baffle replacements are limited to one replacement per term.

Unit must be installed according to all manufacturers' instructions as per the manual.

All Local and National required codes must be met.

The installer is responsible to ensure the unit is operating as designed at the time of installation.

The original purchaser is responsible for annual maintenance of the unit, as outlined in the owner's manual. As outlined below, the warranty may be voided due to problems caused by lack of maintenance.

Repair/replacement parts purchased by the consumer from FPI after the original coverage has expired on the unit will carry a 90 day warranty, valid with a receipt only. Any item shown to be defective will be repaired or replaced at our discretion. No labor coverage is included with these parts.

Exclusions:
This Limited Lifetime Warranty does not extend to paint, rust or corrosion of any kind due to a lack of maintenance or improper venting, combustion air provision, corrosive chemicals (i.e. chlorine, salt, air, etc.), firebrick (rear, sides or bottom), door or glass gasketing, or any other additional factory fitted gasketing.

Malfunction, damage or performance based issues as a result of environmental conditions, location, chemical damages, downdrafts, installation error, installation by an unqualified installer, incorrect chimney components (including but not limited to cap size or type), operator error, abuse, misuse, use of improper fuels (such as unseasoned cordwood, mill-ends, construction lumber or debris, off-cuts, treated or painted lumber, metal or foil, plastics, garbage, solvents, cardboard, coal or coal products, oil based products, waxed cartons, compressed pre-manufactured logs, kiln dried wood), lack of regular maintenance and upkeep, acts of God, weather related problems from hurricanes, tornados, earthquakes, floods, lightning strikes/bolts or acts of terrorism or war, which result in malfunction of the appliance are not covered under the terms of this Limited Lifetime Warranty.

FPI has no obligation to enhance or modify any unit once manufactured (i.e. as products evolve, field modifications or upgrades will not be performed on existing appliances).

This warranty does not cover dealer travel costs for diagnostic or service work. All labor rates paid to authorized dealers are subsidized, pre-determined rates. Dealers may charge homeowner for travel and additional time beyond their subsidy.

Any unit showing signs of neglect or misuse will not be covered under the terms of this warranty policy and may void this warranty. This includes units with rusted or corroded fireboxes which have not been reported as rusted or corroded within three (3) months of installation/purchase.

Units which show evidence of being operated while damaged, or with problems known to the purchaser and causing further damages will void this warranty.

Units where the serial no. has been altered, deleted, removed or made illegible will void this warranty.

Minor movement, expansion and contraction of the steel is normal and is not covered under the terms of this warranty.

FPI is not liable for the removal or replacement of facings or finishing in order to repair or replace any appliance in the field.

Freight damages for products or parts are not covered under the terms of the warranty.

Products made or provided by other manufacturers and used in conjunction with the FPI appliance without prior authorization from FPI may void this warranty.

Limitations of Liability:
The original purchaser's exclusive remedy under this warranty, and FPI's sole obligation under this warranty, express or implied, in contract or in tort, shall be limited to replacement, repair, or refund, as outlined above. IN NO EVENT WILL FPI BE LIABLE UNDER THIS WARRANTY FOR ANY INCIDENTAL OR CONSEQUENTIAL COMMERCIAL DAMAGES OR DAMAGES TO PROPERTY. TO THE EXTENT PERMITTED BY APPLICABLE LAW, FPI MAKES NO EXPRESS WARRANTIES OTHER THAN THE WARRANTY SPECIFIED HEREIN. THE DURATION OF ANY IMPLIED WARRANTY IS LIMITED TO DURATION OF THE EXPRESSED WARRANTY SPECIFIED ABOVE. IF IMPLIED WARRANTIES CANNOT BE DISCLAIMED, THEN SUCH WARRANTIES ARE LIMITED IN DURATION TO THE DURATION OF THIS WARRANTY.

Some U.S. states do not allow limitations on how long an implied warranty lasts, or allow exclusion or limitation of incidental or consequential damages, so the above limitations or exclusions may not apply to you.

Customers located outside the U.S. should consult their local, provincial or national legal codes for additional terms which may be applicable to this warranty.

How to Obtain Warranty Service:
Customers should contact the authorized selling dealer to obtain all warranty and service. In the event the authorized selling dealer is unable to provide warranty / service, please contact FPI by mail at the address listed below. Please include a brief description of the problem and your address, email and telephone contact information. A representative will contact you to make arrangements for an inspection and/or warranty service, by an alternative dealer.

Product Registration and Customer Support:
Thank you for choosing a Regency Fireplace. Regency strives to be a world leader in the design, manufacture, and marketing of hearth products. To provide the best support for your product, we request that you complete a product registration form at http://www.regency-fire.com/Customer-Care/Warranty-Registration.aspx within ninety (90) days of purchase.

Product Registration and Customer Support:

Thank you for choosing a Regency Fireplace. Regency strives to be a world leader in the design, manufacture, and marketing of hearth products. To provide the best support for your product, we request that you complete a product registration form found on our Web Site under Customer Care within ninety (90) days of purchase.

For purchases made in **CANADA or the UNITED STATES**:
http://www.regency-fire.com/Customer-Care/Warranty-Registration.aspx

For purchases made in AUSTRALIA:
http://www.regency-fire.com.au/Customer-Care/Warranty-Registration.aspx

You may also complete the warranty registration form below to register your Regency Fireplace Product and mail and/or fax it back to us, and we will register the warranty for you. It is important you provide us with all the information below in order for us to serve you better.

Warranty Registration Form (or Register online immediately at the above Web Site):

Warranty Details	
Serial Number (required):	
Purchase Date (required) (mm/dd/yyyy):	
Product Details	
Product Model (required):	
Dealer Details	
Dealer Name (required):	
Dealer Address:	
Dealer Phone #:	
Installer:	
Date Installed (mm/dd/yyyy):	
Your Contact Details (required)	
Name:	
Address:	
Phone:	
Email:	

For purchases made in CANADA:

FPI Fireplace Products International Ltd.
6988 Venture St.
Delta, British Columbia
Canada, V4G 1H4

Phone: 604-946-5155
Fax: 604-946-4349

For purchases made in the UNITED STATES:

Fireplace Products U.S., Inc.
PO Box 2189 PMB 125
Blaine, WA
United States, 98231

Phone: 604-946-5155
Fax: 604-946-4349

For purchases made in AUSTRALIA:

Fireplace Products Australia Pty Ltd
1- 3 Conquest Way
Hallam, VIC
Australia, 3803

Phone: +61 3 9799 7277
Fax: +61 3 9799 7822

For fireplace care and tips and answers to most common questions please visit our Customer Care section on our Web Site. Please feel free to contact your selling dealer if you have any questions about your Regency product.

CATALYTIC COMBUSTOR WARRANTY COVERAGE

IMPORTANT WARRANTY INFORMATION FOR CATALYTIC COMBUSTOR
Effective March 1 2019

Any and all claims for catalytic combustor must be filed **by the consumer** directly with their authorized Regency Dealer. FPI/Regency does not handle these claims directly with consumers.

Please follow the instructions below for your catalytic combustor under warranty. To learn more about the care and maintenance of the catalytic combustor, please visit our website: www.firecatcombustors.com.

Any warranty coverage prior to this date will be covered by the original warranty when the appliance was purchased.

(1) Ten year coverage from Regency – not the supplier of the catalytic combustor.

(2) All claims must be made through the dealer where the appliance had been purchased.

(3) One no-charge replacement at any time within the ten (10) year period.

(4) Second replacement at 50% off retail* within the original ten (10) years.

(5) Subsequent replacements or if Ten (10) coverage has expired at full retail* price.

(6) The catalytic combustor must not have been mechanically abused, nor must the wrong fuels have been used in the appliance.

(7) All claims must be accompanied by clear photos of the catalytic combustor showing all damage and also showing existing internal venting from the stove.

The consumer will be responsible for removal, any servicing. This warranty is REGENCY® exclusive warranty and REGENCY® disclaims any other express or implied warranty for the catalytic combustor, including any warranty or merchantability of fitness for a particular use.
NO LABOR WILL APPLY.

All warranty claims must be sent to: Regency Fireplace Products
By Authorized Regency Dealer

* Prices subject to change.
Regency reserves the right to reject any claim if it is determined the damage is a result of misuse, abuse or improper cleaning/handling.

Installer: Please complete the following information

Dealer Name & Address:_____

_____

Installer: _____

Phone #: _____

Date Installed: _____

Serial No.:_____

F5200 Video

Regency is a trademark of FPI Fireplace Products International Ltd.
© Copyright 2019, FPI Fireplace Products International Ltd. All rights reserved.

Printed in Canada

Established 1974

QUALITY CONTROL SERVICES

LABORATORY EQUIPMENT • SALES • SERVICE • CALIBRATION • REPAIRS
2340 SE 11TH Ave. Portland, Oregon 97214 • Box 14831 Portland, Oregon 97293
(503) 236-2712 • FAX (503) 235-2535 • www.qc-services.com

ACCREDITED
CERTIFICATE #1550.01

PFS Teco
11785 SE Hwy 212 STE#305
Clackamas, OR 97015

Report Number: DIRI01A05026181218

A2LA ACCREDITED
CERTIFICATE OF CALIBRATION WITH DATA

INSTRUMENT INFORMATION

Item	Make	Model	Serial Number	Customer ID	Location
Scale	Rice Lake	IQ+355E-2A x 100(	A05026	#041	Lab
Units	**Readability**	**SOP**	**Cal Date**	**Last Cal Date**	**Cal Due Date**
lbs	0.1	QC033	12/18/18	6/13/18	12/2019

FUNCTIONAL CHECKS

SHIFT TEST	LINEARITY	REPEATABILITY	ENVIRONMENTAL CONDITIONS
Test Wt: 250 Tol: 1	Test Wt: HB44 Tol: HB44	Test Wt: 100 Tol: 1	☐ Good ☑ Fair ☐ Poor
As-Found: Pass:☑ Fail:☐	As-Found: Pass:☑ Fail:☐	As-Found: Pass:☑ Fail:☐	Temperature: 16.9°C
As-Left: Pass:☑ Fail:☐	As-Left: Pass:☑ Fail:☐	As-Left: Pass:☑ Fail:☐	

CALIBRATION DATA

Standard	As-Found	As-Left	Expanded Uncertainty
1000	999.3	1000.2	0.12
700	699.7	700.1	0.12
500	499.7	500.1	0.08
300	299.8	300.1	0.08
100	99.9	100.0	0.05
50	50.0	50.0	0.05

CALIBRATION STANDARDS

Item	Make	Model	Serial Number	Cal Date	Cal Due Date	NIST ID
Avoirdupois Cast W	Rice Lake	25 and 50lb	PWO990-CA	11/24/17	11/2019	20172265

Permanent Information Concerning this Equipment:
12 month calibration cycle. 2000lb platform.

Comments/Information Concerning this Calibration
12/18 - RH = 67%. Adjusted span.

Report prepared/reviewed by: ServiceTechDC **Date:** 12/28/18 **Technician:** R.Kauble
Signature:

THIS CERTIFICATE SHALL NOT BE REPRODUCED, EXCEPT IN FULL, WITHOUT THE APPROVAL OF QUALITY CONTROL SERVICES, INC.

The uncertainty is calculated according to the ISO Guide to the Expression of Uncertainty in Measurement and includes the uncertainty of standards used combined with the observed standard deviation of the unit under test. The uncertainty is expanded with a k factor of 2 for an approximate 95% level of confidence. Instruments listed above were calibrated using standards traceable to the National Institute of Standards and Technology (NIST). Calibration data reflect results at the time and location of calibration. Calibration data should be reviewed to insure that the instrument is performing to its required accuracy.

Established 1974

QUALITY CONTROL SERVICES

LABORATORY EQUIPMENT • SALES • SERVICE • CALIBRATION • REPAIRS
2340 SE 11TH Ave. Portland, Oregon 97214 • Box 14831 Portland, Oregon 97293
(503) 236-2712 • FAX (503) 235-2535 • www.qc-services.com

A2LA ACCREDITED
CERTIFICATE #1550.01

PFS Teco
11785 SE Hwy 212 STE#305
Clackamas, OR 97015

Report Number: DIRI0182484A0912013i181218

A2LA ACCREDITED
CERTIFICATE OF CALIBRATION WITH DATA

INSTRUMENT INFORMATION

Item	Make	Model	Serial Number	Customer ID	Location
Scale	Digiweigh	DWP12i 400x.01	82484A0912013i	#050	Lab
Units	**Readability**	**SOP**	**Cal Date**	**Last Cal Date**	**Cal Due Date**
lbs	0.01	QC033	12/18/18	6/13/18	12/2019

FUNCTIONAL CHECKS

SHIFT TEST	LINEARITY	REPEATABILITY	ENVIRONMENTAL CONDITIONS
Test Wt: 50 Tol: 0.05	Test Wt: HB44 Tol: HB44	Test Wt: 50 Tol: 0.01	☐ Good ☑ Fair ☐ Poor
As-Found: Pass:☑ Fail:☐	As-Found: Pass:☑ Fail:☐	As-Found: Pass:☑ Fail:☐	Temperature: 16.4°C
As-Left: Pass:☑ Fail:☐	As-Left: Pass:☑ Fail:☐	As-Left: Pass:☑ Fail:☐	

CALIBRATION DATA

Standard	As-Found	As-Left	Expanded Uncertainty
400	399.99	399.99	0.058
300	300.00	300.00	0.058
200	200.03	200.03	0.058
100	100.01	100.01	0.012
50	50.00	50.00	0.012
20	20.00	20.00	0.012

CALIBRATION STANDARDS

Item	Make	Model	Serial Number	Cal Date	Cal Due Date	NIST ID
Avoirdupois Cast W	Rice Lake	25 and 50lb	PWO990-CA	11/24/17	11/2019	20172265

Permanent Information Concerning this Equipment:
12 month calibration cycle.

Comments/Information Concerning this Calibration
12/18 - RH = 64%. Adjusted span.

Report prepared/reviewed by: ServiceTechJC **Date:** 12/28/18 **Technician:** R.Kauble
Signature:

THIS CERTIFICATE SHALL NOT BE REPRODUCED, EXCEPT IN FULL, WITHOUT THE APPROVAL OF QUALITY CONTROL SERVICES, INC.

The uncertainty is calculated according to the ISO Guide to the Expression of Uncertainty in Measurement and includes the uncertainty of standards used combined with the observed standard deviation of the unit under test. The uncertainty is expanded with a k factor of 2 for an approximate 95% level of confidence. Instruments listed above were calibrated using standards traceable to the National Institute of Standards and Technology (NIST). Calibration data reflect results at the time and location of calibration. Calibration data should be reviewed to insure that the instrument is performing to its required accuracy.

Dry Gas Meter Calibration

Meter Manufacturer:	Apex
Model:	XC-60-ED
Lab ID #:	53
Serial #:	1902130
Calibration Date:	12/17/2018
Calibration Expiration:	6/17/2019
Barometric Pressure:	29.87 in. Hg

PFS·TECO

Reference Standard DGM	
Manufacturer:	Apex
Model:	SK25DA
Lab ID#:	47
Serial #:	1101001
Calibration Expiration Date:	3/5/2019
Calibration γ Factor:	0.998

Unit Under Test Previous Calibration	
Date	12/13/2018
γ Factor:	1.002
Allowable Deviation (±5%):	0.0501
Actual Deviation:	0.00
Result:	PASS

Calibration Data	Run 1	Run 2	Run 3
Standard DGM Initial Volume (L)	0.000	0.000	0.000
Standard DGM Final Volume (L)	166.180	147.027	169.354
Standard DGM Temperature (°F)	71.7	72.5	73.0
Standard DGM Pressure (in H_2O)	0.00	0.00	0.0
DGM Initial Volume (ft^3)	0.000	0.000	0.000
DGM Final Volume (ft^3)	5.950	5.296	6.132
DGM Temperature (°F)	83.0	91.0	93.0
DGM Pressure (in H_2O)	2.60	2.00	1.5
Time (min)	37.0	37.0	49.0
Net Volume for Standard DGM (ft^3)	5.869	5.192	5.981
Net Volume for DGM (ft^3)	5.950	5.296	6.132

Dry Gas Meter γ Factor	0.999	1.007	1.006
γ Factor Deviation From Average	0.999	1.007	1.006

Average Gas Meter γ Factor: 1.004

Calculations:

1. Deviation = |Average value for all runs - current run value|
2. $\gamma = [V_{std} \times (\gamma_{Std}) \times (P_{bar}+P_{std}/13.6) \times (T_{DGM} + 460)] / [V_{DGM} \times (T_{std} + 460) \times (P_{bar} + P_{DGM}/ 13.6)]$

Standard Reference Meter is calibrated to NIST traceable standards. Uncertainty of measurement is ±0.5%.

Technician: _____ 12/17/2018

Dry Gas Meter Calibration

Meter Manufacturer:	Apex
Model:	XC-60-ED
Lab ID #:	54
Serial #:	1902133
Calibration Date:	12/17/2018
Calibration Expiration:	6/17/2019
Barometric Pressure:	29.87 in. Hg

PFS·TECO

Reference Standard DGM	
Manufacturer:	Apex
Model:	SK25DA
Lab ID#:	47
Serial #:	1101001
Calibration Expiration Date:	3/5/2019
Calibration γ Factor:	0.998

Unit Under Test Previous Calibration	
Date	12/13/2018
γ Factor:	0.997
Allowable Deviation (±5%):	0.04985
Actual Deviation:	0.00
Result:	PASS

Calibration Data	Run 1	Run 2	Run 3
Standard DGM Initial Volume (L)	0.000	0.000	0.000
Standard DGM Final Volume (L)	153.596	138.287	193.022
Standard DGM Temperature (°F)	73.0	73.0	74.0
Standard DGM Pressure (in H_2O)	0.00	0.00	0.0
DGM Initial Volume (ft^3)	0.000	0.000	0.000
DGM Final Volume (ft^3)	5.594	5.047	7.058
DGM Temperature (°F)	94.5	95.0	96.0
DGM Pressure (in H_2O)	2.60	2.00	1.5
Time (min)	35.0	36.0	57.0
Net Volume for Standard DGM (ft^3)	5.424	4.884	6.816
Net Volume for DGM (ft^3)	5.594	5.047	7.058

Dry Gas Meter γ Factor	1.000	1.001	1.000
γ Factor Deviation From Average	1.000	1.001	1.000

Average Gas Meter γ Factor: 1.000

Calculations:

1. Deviation = |Average value for all runs - current run value|
2. $\gamma = [V_{std} \times (\gamma_{Std}) \times (P_{bar}+P_{std}/13.6) \times (T_{DGM} + 460)] / [V_{DGM} \times (T_{std} + 460) \times (P_{bar} + P_{DGM}/ 13.6)]$

Standard Reference Meter is calibrated to NIST traceable standards. Uncertainty of measurement is ±0.5%.

Technician: 12/17/2018

Dry Gas Meter Calibration

Meter Manufacturer:	Apex
Model:	Apex-AK-600
Lab ID #:	055
Serial #:	810016
Calibration Date:	6/15/2018
Calibration Expiration:	6/15/2019
Barometric Pressure:	29.83 in. Hg

Reference Standard DGM	
Manufacturer:	Apex
Model:	SK25DA
Lab ID#:	047
Serial #:	1101001
Calibration Expiration Date:	3/5/2019
Calibration γ Factor:	0.998

Unit Under Test Previous Calibration	
Date	1/18/2017
γ Factor:	0.997
Allowable Deviation (±5%):	0.04985
Actual Deviation:	0.00
Result:	PASS

Calibration Data	Run 1	Run 2	Run 3
Standard DGM Initial Volume (L)	0.000	0.000	0.000
Standard DGM Final Volume (L)	145.479	148.058	143.802
Standard DGM Temperature (°F)	71.0	71.0	71.0
Standard DGM Pressure (in H_2O)	0.00	0.00	0.0
DGM Initial Volume (ft^3)	0.000	0.000	0.000
DGM Final Volume (ft^3)	5.146	5.254	5.114
DGM Temperature (°F)	75.0	76.5	77.5
DGM Pressure (in H_2O)	1.80	1.80	1.8
Time (min)			
Net Volume for Standard DGM (ft^3)	5.138	5.229	5.078
Net Volume for DGM (ft^3)	5.146	5.254	5.114

Dry Gas Meter γ Factor	0.999	0.999	0.999
γ Factor Deviation From Average	0.999	0.999	0.999

Average Gas Meter γ Factor: 0.999

Calculations:

1. Deviation = |Average value for all runs - current run value|
2. $\gamma = [V_{std} \times (\gamma_{Std}) \times (P_{bar}+P_{std}/13.6) \times (T_{DGM} + 460)] / [V_{DGM} \times (T_{std} + 460) \times (P_{bar} + P_{DGM}/ 13.6)]$

Standard Reference Meter is calibrated to NIST traceable standards. Uncertainty of measurement is ±0.5%.

 Technician:

Established 1974

QUALITY CONTROL SERVICES

LABORATORY EQUIPMENT • SALES • SERVICE • CALIBRATION • REPAIRS
2340 SE 11TH Ave. Portland, Oregon 97214 • Box 14831 Portland, Oregon 97293
(503) 236-2712 • FAX (503) 235-2535 • www.qc-services.com

ACCREDITED
Calibration Services
Certificate Number: 1550.01
Laboratory code: 115953

Report of Calibration

Firm: Dirigo Laboratories
Address: 11785 SE Hwy 212, Ste 305
City/State/Zip: Clackamas, OR 97015

Test Completed: 03/21/17
Submitted By: John Steiner
Traceable Number: 20170468

Test Item: 200mg and 100mg Individual Weights
Serial No.: Listed in Table

Manufacturer: Troemner

Material	Assumed Density	Range	Tolerance Class
Stainless Steel	7.95 g/cm^3	200mg & 100mg	ASTM Class 1

Method and Traceability
The procedure used for this calibration is NIST IR 6969 SOP 4 Double Substitution Weighing Design. Standards used for comparison are traceable to the National Institute of Standards and Technology (reports on file) and are part of a comprehensive measurement assurance program for ensuring continued accuracy and traceability within the level of uncertainty reported. The Traceable Number listed above is Traceable to National Standards through an unbroken chain of comparison each having stated uncertainties.

Standards Used:
100g to 1mg Working Standards Were Calibrated: 03/03/17 Due: 03/31/18 Standards ID: 723318
Mass Comparators Used: MET-05 **Tested by:** D. Thompson

Conventional Mass: "The conventional value of the result of weighing a body in air is equal to the mass of a standard, of conventionally chosen density, at a conventionally chosen temperature, which balances this body at this reference temperature in air of conventionally chosen density. International Recommendation 33 (OIML IR 33 1973, 1979). "Conventional Value of the Result of Weighing in Air" **(Previously known as "Apparent Mass vs. 8.0g/cm^3).**

Uncertainty Statement: The uncertainty conforms to the ISO Guide to the Expressions of Uncertainty in Measurement. Uncertainty as reported is based on a coverage factor k=2 for an approximate 95 percent level of uncertainty. Uncertainty components include the standard deviation of the process, the uncertainty of the standard used, an uncertainty component associated with the potential drift of the standard used, and the estimated uncertainty related to measuring and determining the air buoyancy effect.

Conventional Mass Values are listed on page 2 of this report.

Quality Control Services, Inc.
Metrology Laboratory Manager
E-mail dthompson@qc-services.com

Date: 03/21/17

Signature David S. Thompson

This document shall not be reproduced, except in full, without the written approval of Quality Control Services Mass Laboratory.

Member: National Conference of Standards Laboratories and Weights & Measures

Established 1974

QUALITY CONTROL SERVICES

LABORATORY EQUIPMENT • SALES • SERVICE • CALIBRATION • REPAIRS
2340 SE 11TH Ave. Portland, Oregon 97214 • Box 14831 Portland, Oregon 97293
(503) 236-2712 • FAX (503) 235-2535 • www.qc-services.com

ACCREDITED
Calibration Services
Certificate Number: 1550.01
Laboratory code: 115953

Report of Calibration

Firm: Dirigo Laboratories
Address: 11785 SE Hwy 212, Ste 305
City/State/Zip: Clackamas, OR 97015

Test Completed: 03/21/17
Submitted By: John Steiner
Traceable Number: 20170468

Test Item: 200mg and 100mg Individual Weights
Serial No.: Listed in Table

Manufacturer: Troemner

Laboratory Environment at time of test

Temperature °C	Pressure mmHg	Humidity %RH
21.967	753.44	49.44

Conventional Mass Value

Nominal Value	As Found grams	As Found Correction* (mg)	Uncertainty (mg)	Tolerance (mg)
200mg SN 1000101395	0.2000061	0.0061	0.0026	0.01
100mg SN 1000126267	0.1000046	0.0046	0.0028	0.01

*Correction is the difference between the conventional mass value of a weight and its nominal value.

Comments: These weights were new from the manufacturer and were within ASTM Class 1 tolerances As Found. No adjustments or changes were made so As Found values should be considered to be As Left values.

Accredited by the American Association for Laboratory Accreditation (A2LA) under Calibration Laboratory Code 115953 and Certificate Number 1550.01. This laboratory meets the requirements of ISO/IEC 17025:2005 *General Requirements for the Competence of Testing and Calibration Laboratories.* This laboratory also meets the requirements of ANSI/NCSL Z540-1-1994 and any additional program requirements in the field of calibration.

Quality Control Services, Inc.
Metrology Laboratory Manager
E-mail dthompson@qc-services.com

Date: 03/21/17

Signature David S. Thompson

This document shall not be reproduced, except in full, without the written approval of Quality Control Services Mass Laboratory.
Member: National Conference of Standards Laboratories and Weights & Measures

Established 1974

QUALITY CONTROL SERVICES

LABORATORY EQUIPMENT • SALES • SERVICE • CALIBRATION • REPAIRS
2340 SE 11TH Ave. Portland, Oregon 97214 • Box 14831 Portland, Oregon 97293
(503) 236-2712 • FAX (503) 235-2535 • www.qc-services.com

ACCREDITED
Calibration Services
Certificate Number: 1550.01
Laboratory code: 115953

Report of Calibration

Firm: Dirigo Laboratories
Address: 11785 SE Hwy 212, Ste 305
City/State/Zip: Clackamas, OR 97015

Test Completed: 01/15/16
Purchase Order: 1001
Traceable Number: 20152489

Test Item: 20lb and 10lb Individual Grip Handle Weights
Serial No.: Listed in Table

Manufacturer: Unknown

Laboratory Environment at time of test

Temperature °C	Pressure mmHg	Humidity %RH
21.448	760.64	44.58

Conventional Mass Value

Nominal Value	As Found pounds	As Found Correction* (mg)	Uncertainty (mg)	Tolerance (mg)
20lb #098	19.9995450	-206.4	6.4	910
10lb #097	10.0006510	295.3	5.1	450
10lb #051	10.0003421	155.2	5.1	450

*Correction is the difference between the conventional mass value of a weight and its nominal value.

Comments: These weights were received in good condition and were within NIST Handbook 105-1 Class F tolerances As Found. No adjustments or changes were made so As Found values should be considered to be As Left values.

Accredited by the American Association for Laboratory Accreditation (A2LA) under Calibration Laboratory Code 115953 and Certificate Number 1550.01. This laboratory meets the requirements of ISO/IEC 17025:2005 *General Requirements for the Competence of Testing and Calibration Laboratories*. This laboratory also meets the requirements of ANSI/NCSL Z540-1-1994 and any additional program requirements in the field of calibration.

Quality Control Services, Inc.
Metrology Laboratory Manager
E-mail dthompson@qc-services.com

Date: 01/15/16

Signature David S. Thompson

This document shall not be reproduced, except in full, without the written approval of Quality Control Services Mass Laboratory.
Member: National Conference of Standards Laboratories and Weights & Measures

Established 1974

QUALITY CONTROL SERVICES

LABORATORY EQUIPMENT • SALES • SERVICE • CALIBRATION • REPAIRS
2340 SE 11TH Ave. Portland, Oregon 97214 • Box 14831 Portland, Oregon 97293
(503) 236-2712 • FAX (503) 235-2535 • www.qc-services.com

ACCREDITED
CERTIFICATE #1550.01

PFS Teco
11785 SE Hwy 212 STE#305
Clackamas, OR 97015

Report Number: DIRI0134307497181218

A2LA ACCREDITED
CERTIFICATE OF CALIBRATION WITH DATA

INSTRUMENT INFORMATION

Item	Make	Model	Serial Number	Customer ID	Location
Balance	Sartorius	ENTRIS224-1S	34307497	#107	Lab
Units	**Readability**	**SOP**	**Cal Date**	**Last Cal Date**	**Cal Due Date**
g	0.0001	QC012	12/18/18	6/13/18	12/2019

FUNCTIONAL CHECKS

ECCENTRICITY
Test Wt: 100 Tol: 0.0003
As-Found: Pass: ☑ Fail: ☐
As-Left: Pass: ☑ Fail: ☐

LINEARITY
Test Wt: 50 x 4 Tol: 0.0002
As-Found: Pass: ☑ Fail: ☐
As-Left: Pass: ☑ Fail: ☐

STANDARD DEVIATION
Test Wt: 100 Tol: 0.0001

1. 100.0001	5. 100.0002	9. 100.0001
2. 100.0001	6. 100.0001	10. 100.0001
3. 100.0001	7. 100.0001	Result
4. 100.0001	8. 100.0002	0.00004

ENVIRONMENTAL CONDITIONS
☐ Good ☑ Fair ☐ Poor
Temperature: 21.3°C

A2LA ACCREDITED SECTION OF REPORT

Standard	As-Found	As-Left	Expanded Uncertainty
200	200.0002	200.0001	0.00014
100	100.0001	100.0001	0.00014
50	50.0003	50.0001	0.00014
20	20.0001	20.0001	0.00014
1	1.0001	1.0000	0.00014
0.1	0.1000	0.1000	0.00014

CALIBRATION STANDARDS

Item	Make	Model	Serial Number	Cal Date	Cal Due Date	NIST ID
Weight Set	R.L./Troemner	10kg to 1mg	G782	1/3/18	1/2019	20172421

Permanent Information Concerning this Equipment:
12 month calibration cycle.

Comments/Info Concerning this Calibration:
12/18 - RH = 56%. Adjusted span.

Report prepared/reviewed by: ServiceTech JC **Date:** 12/28/18 **Technician:** R.Kauble
Signature:

THIS CERTIFICATE SHALL NOT BE REPRODUCED WITHOUT THE APPROVAL OF QUALITY CONTROL SERVICES, INC.

The uncertainty is calculated according to the ISO Guide to the Expression of Uncertainty in Measurement and includes the uncertainty of standards used combined with the observed standard deviation and readability of the unit under test. The uncertainty is expanded with a k factor of 2 for an approximate 95% level of confidence. Instruments listed above were calibrated using standards traceable to the National Institute of Standards and Technology (NIST). Calibration data reflect results at the time and location of calibration. Calibration data should be reviewed to insure that the instrument is performing to its required accuracy. Calibrations comply with ISO/IEC 17025 and ANSI/Z540-1-1994 quality standards.

DICK MUNNS COMPANY
LIQUID & GAS FLOW CALIBRATION

ISO 17025 IAS ACCREDITED

CL-122

CERTIFICATE OF CALIBRATION

CUSTOMER:	**PFS-TECO :** CLACKAMAS, OR	**CALIBRATION DATE:**	03/14/2019
PO NUMBER:	N/A	**CALIBRATION DUE:**	03/14/2020
INST. MANUFACTURER:	DWYER	**PROCEDURE:**	T.O.33K6-4-1769-1
INST. DESCRIPTION:	VELOMETER	**CALIBRATION FLUID:**	AIR @ 14.7 PSIA 70°F
MODEL NUMBER:	471	**RECEIVED CONDITION:**	WITHIN MFG. SPECS.
SERIAL NUMBER:	CP288559 (ID# 095)	**LEFT CONDITION:**	WITHIN MFG. SPECS.
RATED UNCERTAINTY:	SEE NOTES BELOW.	**AMBIENT CONDITIONS:**	762 mm HGA 43% RH 69°F
UNCERTAINTY GIVEN:	± .20% RD ; k=2	**CERTIFICATE FILE #:**	490265.2019

NOTES: ± 3% FS (0-500 / 0-1500) *** ± 4% F.S. (0-5000) ***± 5% F.S. (0-15000) *** ± 2 °F

NOTES CONT. : Q.MANUAL IM 1.5 REV 2017.1 DATED 7-18-2017

UUT INDICATED FT/MIN	DM.STD. ACTUAL FT/MIN	UUT INDICATED DEG. F	DM STD. ACTUAL DEG. F
64	65	0 TO 200°F	0 TO 200°F
110	112	43.4	43.5
206	210	69.0	68.9
498	509	99.4	99.2
503	505		
1049	1058		
1497	1514		
509	513		
3419	3460		
4992	5068		
5136	5235		
13928	14232		

STANDARDS USED:		
A220: 12" WIND TUNNEL 0 - 8000 FPM | CMC ± .203% RD | TRACE# 1520423238	DUE	05/23/2019
A24: HART SCIENTIFIC TEMP. STANDARD | ±.024 F | TRACE# 1520423238	DUE	03/07/2020

All instruments used in the performance of the shown calibration have traceability to the National Institute of Standards and Technology (NIST). The uncertainty ratio between the calibration standards (DM.STD.) used and the unit under test (UUT) is a minimum of 4:1, unless otherwise noted. Calibration has been performed per the shown procedure number, in accordance with ISO 10012:2003, ISO 17025:2005, ANSI/NCSL-Z-540.3, and/or MIL-STD-45662A. Test methods: API2530-92 & ASME MFC-3M-1989.

Dick Munns Company • 11133 Winners Circle • Los Alamitos, CA 90720
Phone (714) 827-1215 • Fax (714) 827-0823

This Calibration Certificate shall not be reproduced except in full without approval by DICK MUNNS COMPANY. The data shown applies only to the instrument being calibrated and under the stated conditions of calibration.

Date: 3/14/2019

Approved By:

Calibration Technician: D. C.

Model 1430 Microtector® Electronic Point Gage

Installation and Operating Instructions

Model 1430 Microtector® Portable Electronic Point Gage combines modern, solid-state integrated circuit electronics with a time-proven point gage manometer to provide fast, accurate pressure measurements.

SPECIFICATIONS AND FEATURES

- Accurate and repeatable to ± .00025 inches water column
- Pressure range: 0 - 2″ w.c., positive, negative, or differential pressures
- Non-toxic and inexpensive gage fluid consists of distilled water mixed with a small amount of fluorescein green color concentrate
- Convenient, portable, lightweight and self-contained, the unit requires no external power connections and is operated by a 1.5 volt penlight cell
- A.C. detector current eliminates point plating, fouling and erosion
- Micrometers are manufactured in accordance with ASME B89.1.13-2001, and are traceable to a standard at the National Institute of Standards and Technology
- Three-point mounting, dual leveling adjustment, and circular level vial assure rapid setup
- Durablock® precision-machined acrylic plastic gage body
- Sensitive 0 - 50 microamp D.C. meter acts as a detector and also indicates battery and probe condition
- Heavy 2″ thick steel base plate provides steady mounting
- Top-quality glass epoxy circuit board and solid-state, integrated circuit electronics
- Electronic enclosure of tough, molded styrene acrylonitrile provides maximum protection to components yet allows easy access to battery compartment
- Rugged sheet steel cover and carrying case protects the entire unit when not in use
- Accessories included are (2) 3-foot lengths Tygon® tubing, (2) 1/8″ pipe thread adapters and 3/4 oz. bottle of fluorescein green color concentrate with wetting agent

Maximum pressure: 100 psig with optional pipe thread connections.

Tygon® is a registered trademark of Saint-Gobain Corporation

DWYER INSTRUMENTS, INC.
P.O. BOX 373
MICHIGAN CITY, INDIANA 46361,U.S.A
Phone: 219/879-8000
Fax: 219/872-9057
www.dwyer-inst.com
e-mail: info@dwyer-inst.com

PRAXAIR

Praxair
5700 South Alameda Street
Los Angeles, CA 90058
Tel: (323) 585-2154 Fax:(714) 542-6689
PGVPID: F22017

DocNumber: 000113537

CERTIFICATE OF ANALYSIS / EPA PROTOCOL GAS

Customer & Order Information:

PXPKG TUALATIN OR H
10450 SW TUALATIN SHERWOOD
TUALATIN OR 97062

Praxair Order Number: 70337802
Customer P. O. Number:
Customer Reference Number:

Fill Date: 8/7/2017
Part Number: NI CD17CO8E-AS
Lot Number: 70086721903
Cylinder Style & Outlet: AS CGA 590
Cylinder Pressure & Volume: 1290 psig 99 cu. ft.

Certified Concentration:

Expiration Date: 8/11/2025
Cylinder Number: CC700832

			NIST Traceable Analytical Uncertainty:
4.33	%	CARBON MONOXIDE	± 0.5 %
16.93	%	CARBON DIOXIDE	± 0.3 %
16.99	%	OXYGEN	± 0.3 %
	Balance	NITROGEN	± 0.2 %

Certifcation Information: *Certification Date:* 8/11/2017 *Term:* 96 Months *Expiration Date:* 8/11/2025
This cylinder was certified according to the 2012 EPA Traceability Protocol, Document #EPA-600/R-12/531, using Procedure G1. Do Not Use this Standard if Pressure is less than 100 PSIG.

CO2 responses have been corrected for O2 IR boardening effect. O2 responses have been corrected for CO2 interference.

Analytical Data: *(R=Reference Standard, Z=Zero Gas, C=Gas Candidate)*

1. **Component: CARBON MONOXIDE**

Requested Concentration: 4.25 %
Certified Concentration: 4.33 %
Instrument Used: Horiba VIA-510 S/N UB9UCSYX
Analytical Method: NDIR
Last Multipoint Calibration: 7/23/2017

Reference Standard Type: GMIS
Ref. Std. Cylinder # : CC242633
Ref. Std. Conc: 5.00%
Ref. Std. Traceable to SRM # : 2642a
SRM Sample # : 51-D-23
SRM Cylinder # : FF23106

First Analysis Data: Date: 8/11/2017

Z:	0	R:	5	C:	4.33	Conc:	4.333
R:	4.99	Z:	0	C:	4.33	Conc:	4.333
Z:	0	C:	4.32	R:	5	Conc:	4.323

UOM: % Mean Test Assay: 4.33 %

Second Analysis Data: Date:

Z:	0	R:	0	C:	0	Conc:	0
R:	0	Z:	0	C:	0	Conc:	0
Z:	0	C:	0	R:	0	Conc:	0

UOM: % Mean Test Assay: 0 %

2. **Component: CARBON DIOXIDE**

Requested Concentration: 17 %
Certified Concentration: 16.93 %
Instrument Used: Horiba VIA-510 S/N 20C194WK
Analytical Method: NDIR
Last Multipoint Calibration: 7/20/2017

Reference Standard Type: GMIS
Ref. Std. Cylinder # : SA10234
Ref. Std. Conc: 20.02%
Ref. Std. Traceable to SRM # : RGM#CC28
SRM Sample # : N/A
SRM Cylinder # : RGM#CC28033

First Analysis Data: Date: 8/11/2017

Z:	0	R:	20.08	C:	16.99	Conc:	16.936
R:	20.08	Z:	0	C:	16.99	Conc:	16.936
Z:	0	C:	16.98	R:	20.09	Conc:	16.926

UOM: % Mean Test Assay: 16.933 %

Second Analysis Data: Date:

Z:	0	R:	0	C:	0	Conc:	0
R:	0	Z:	0	C:	0	Conc:	0
Z:	0	C:	0	R:	0	Conc:	0

UOM: % Mean Test Assay: 0 %

Information contained herein has been prepared at your request by qualified experts within Praxair Distribution, Inc. While we believe that the information is accurate within the limits of the analytical methods employed and is complete to the extent of the specific analyses performed, we make no warranty or representation as to the suitability of the use of the information for any purpose. The information is offered with the understanding that any use of the information is at the sole discretion and risk of the user. In no event shall the liability of Praxair Distribution, Inc., arising out of the use of the information contained herein exceed the fee established for providing such information.

PRAXAIR
Making our planet more productive

DocNumber: 223791

Praxair Distribution, Inc.
5700 S. Alameda Street
Los Angeles CA 90058
Tel: 323-585-2154
Fax: 714-542-6689
PGVP ID: F22018

CERTIFICATE OF ANALYSIS / EPA PROTOCOL GAS

Customer & Order Information

PXPKG TUALATIN OR H
10450 SW TUALATIN SHERWOOD ROAD
TUALATIN OR 97062

Certificate Modification Date: 09/05/2018
Praxair Order Number: 70716136
Part Number: NI CD10CO33E-AS

Fill Date: 08/31/2018
Lot Number: 70086824308
Cylinder Style & Outlet: AS CGA 590
Cylinder Pressure and Volume: 2000 psig 140 ft3

Certified Concentration

ProSpec EZ Cert

Expiration Date:	09/05/2026	NIST Traceable
Cylinder Number:	CC170624	Expanded Uncertainty
10.00 %	Carbon dioxide	± 0.3 %
2.51 %	Carbon monoxide	± 0.7 %
10.50 %	Oxygen	± 0.6 %
Balance	Nitrogen	

Certification Information:

Certification Date: 09/05/2018 *Term:* 96 Months *Expiration Date:* 09/05/2026

This cylinder was certified according to the 2012 EPA Traceability Protocol, Document #EPA-600/R-12/531, using Procedure G1.

Do Not Use this Standard if Pressure is less than 100 PSIG.

CO responses have been corrected for CO2 interference. CO2 responses have been corrected for Oxygen IR Broadening effect. O2 responses have been corrected for CO2 interference.

Analytical Data:

(R=Reference Standard, Z=Zero Gas, C=Gas Candidate)

1. ***Component:*** **Carbon dioxide**

Requested Concentration: 10 %
Certified Concentration: 10.00 %
Instrument Used: Horiba VIA-510 S/N 20C194WK
Analytical Method: NDIR
Last Multipoint Calibration: 08/20/2018

First Analysis Data: Date 09/05/2018

Z: 0	R: 14.02	C: 10	Conc: 10
R: 14.02	Z: 0	C: 10	Conc: 10
Z: 0	C: 10	R: 14.02	Conc: 10

UOM: % Mean Test Assay: 10 %

Reference Standard: Type / Cylinder #: GMIS / CC141375
Concentration / Uncertainty: 14.02 % ±0.3%
Expiration Date: 06/11/2026
Traceable to: SRM # / Sample # / Cylinder #: SRM 1675b / 6-F-51 / CAL014538
SRM Concentration / Uncertainty: 13.963% / ±0.034%
SRM Expiration Date: 05/16/2022

Second Analysis Data: Date

Z: 0	R: 0	C: 0	Conc: 0
R: 0	Z: 0	C: 0	Conc: 0
Z: 0	C: 0	R: 0	Conc: 0

UOM: % Mean Test Assay: %

2. ***Component:*** **Carbon monoxide**

Requested Concentration: 2.5 %
Certified Concentration: 2.51 %
Instrument Used: Horiba VIA-510 S/N UB9UCSYX
Analytical Method: NDIR
Last Multipoint Calibration: 08/20/2018

First Analysis Data: Date 09/05/2018

Z: 0	R: 2.48	C: 2.51	Conc: 2.51
R: 2.48	Z: 0	C: 2.51	Conc: 2.51
Z: 0	C: 2.51	R: 2.48	Conc: 2.51

UOM: % Mean Test Assay: 2.51 %

Reference Standard: Type / Cylinder #: GMIS / CC102045
Concentration / Uncertainty: 2.48 % ±0.448%
Expiration Date: 04/03/2025
Traceable to: SRM # / Sample # / Cylinder #: SRM 2641a / 52-D-30 / CAL017193
SRM Concentration / Uncertainty: 4.009% / ±0.017%
SRM Expiration Date: 07/15/2019

Second Analysis Data: Date

Z: 0	R: 0	C: 0	Conc: 0
R: 0	Z: 0	C: 0	Conc: 0
Z: 0	C: 0	R: 0	Conc: 0

UOM: % Mean Test Assay: %

3. ***Component:*** **Oxygen**

Requested Concentration: 10.5 %
Certified Concentration: 10.50 %
Instrument Used: OXYMAT 5E
Analytical Method: Paramagnetic
Last Multipoint Calibration: 09/04/2018

First Analysis Data: Date 09/05/2018

Z: 0	R: 9.88	C: 10.49	Conc: 10.49
R: 9.88	Z: 0	C: 10.5	Conc: 10.5
Z: 0	C: 10.5	R: 9.88	Conc: 10.5

UOM: % Mean Test Assay: 10.5 %

Reference Standard: Type / Cylinder #: NTRM / DT0010402
Concentration / Uncertainty: 9.88 % ±0.4%
Expiration Date: 11/18/2022
Traceable to: SRM # / Sample # / Cylinder #: NTRM #170701 / N/A / NTRM #DT0010402
SRM Concentration / Uncertainty: 9.875% / ±0.040%
SRM Expiration Date: 11/18/2022

Second Analysis Data: Date

Z: 0	R: 0	C: 0	Conc: 0
R: 0	Z: 0	C: 0	Conc: 0
Z: 0	C: 0	R: 0	Conc: 0

UOM: % Mean Test Assay: %

Analyzed By **Danielle Burns**

Certified By **Jose Vasquez**

Information contained herein has been prepared at your request by qualified experts within Praxair Distribution, Inc. While we believe that the information is accurate within the limits of the analytical methods employed and is complete to the extent of the specific analyses performed, we make no warranty or representation as to the suitability of the use of the information for any purpose. The information is offered with the understanding that any use of the information is at the sole discretion and risk of the user. In no event shall the liability of Praxair Distribution, Inc., arising out of the use of the information contained herein exceed the fee established for providing such information.

Verification of Standardization

of

Tape Measure

by

Advanced Calibration Technologies
28111 S.E. Wally Road
Boring, OR 97009
1-800-259-5058

ACCREDITED
Calibration
Cert# 1342.01

Customer:	PFS Teco, Inc	Street:	11785 Southeast Highway 212 Suite 305
City:	Clackamas State: OR	Zip:	97015 Location: In House
Machine Manufacturer:	Dewalt	Model:	16' Tape Measure
Capacity:	0.000 - 192.000 inches 0.125 Divisions	Serial #:	090
Calibration Cycle:	12 Months	Lab ID#:	#090
Previous Calibration Date:	January 2019	Calibration Procedure:	Ad-Tek SR
Equipment Used:	Gauge Blocks S/N: ADGB002	Action Recommended:	
If Other, Explain:			

Verification Data

Purpose:
This method provides instructions for checking the critical dimensions of the equipment.
Tolerance:
Equipment shall meet the dimensional tolerances specified in the applicable test method.
Procedure:
Verified using manufacturer's procedures.

Actual Dimensions (inches)	Unit Under Test As Found (inches)	Unit Under Test As Left (inches)	Difference (inches)
0.0000	0.000	0.000	0.000
0.1250	0.050	0.050	-0.075
0.2500	0.250	0.250	0.000
0.5000	0.500	0.500	0.000
0.7500	0.750	0.750	0.000
1.0000	1.000	1.000	0.000
3.0000	3.000	3.000	0.000
5.0000	5.000	5.000	0.000
7.0000	7.000	7.000	0.000
9.0000	9.000	9.000	0.000
12.0000	12.000	12.000	0.000

The overall condition of the device as found:	Within Specification
The overall condition of the device as left:	Within Specification
The measurement of uncertainty (MU) was calculated to be:	0.00060

File No: PFS-101666-0119D0120-AH-SR-090

Temperature: 72.1°F Humidity: 41.1%

The equipment used in the verification of this instrument has been calibrated and is NIST traceable.
The uncertainty of calibration was estimated at the 95% confidence level, coverage factor (k=2).

Remarks:

This certificate of verification is issued as a statement of fact that on the date of verification the above instrument had an accuracy as indicated and was calibrated to meet the requirements of the manufacturer's specifications. This certificate should not be construed or regarded as a guarantee or warranty of any kind that the instrument will retain the same percentage of accuracy as determined on the date when the verification was performed and reported. Ad-Tek, Inc. hereby expressly disclaims any and all liability for damage or loss by all parties arising or resulting from deterioration, obsolescence, malfunction, subsequent calibration performed by another agency or substandard performance of said instrument.

This report and certificate of verification shall not be reproduced except in full, without the written approval of Ad-Tek, Inc.

Service Technician: Alisa Houser Date of Service: January 16, 2019

Technical Manager: Nicole Ostrowski Date Next Due: January 2020

We sincerely appreciate your business and thank you for selecting Advanced Calibration Technologies, Inc. for servicing your equipment.
To reschedule, please call (800) 259-5058. Thank You.

Verification of Standardization

of

Calipers

by

Advanced Calibration Technologies
28111 S.E. Wally Road
Boring, OR 97009
1-800-259-5058

ACCREDITED
Calibration
Cert# 1342.01

Customer:	PFS Teco, Inc	Street:	11785 Southeast Highway 212 Suite 305
City:	Clackamas State: OR	Zip:	97015 Location: In House
Machine Manufacturer:	General	Model:	6" Digital Caliper
Capacity:	0.0000 - 6.0000 inches 0.0005 Divisions	Serial #:	092
Calibration Cycle:	12 Months	Lab ID#:	092
Previous Calibration Date:	January 2018	Calibration Procedure:	Ad-Tek DC
Equipment Used:	Gauge Blocks S/N: ADGB002	Action Recommended:	
If Other, Explain:			

Verification Data

Purpose:

This method provides instructions for checking the critical dimensions of the inside diameter of the equipment.

Tolerance:

Equipment shall meet the dimensional tolerances specified by the manufacturer for the inside diameter.

Procedure:

Verified using the procedure to meet manufacturer's tolerance for inside diameter.

Actual Dimensions (inches)	Unit Under Test As Found (inches)	Unit Under Test As Left (inches)	Difference (inches)
0.0000	0.0000	0.0000	0.0000
0.0500	0.0500	0.0500	0.0000
0.1000	0.1000	0.1000	0.0000
0.1010	0.1010	0.1010	0.0000
0.1050	0.1050	0.1050	0.0000
0.1100	0.1100	0.1100	0.0000
0.1500	0.1500	0.1500	0.0000
0.5000	0.5000	0.5000	0.0000
1.0000	1.0000	1.0000	0.0000
3.0000	2.9995	2.9995	-0.0005
5.0000	4.9990	4.9990	-0.0010

The overall condition of the device as found:	Within Specification
The overall condition of the device as left:	Within Specification
The measurement of uncertainty (MU) was calculated to be:	0.00062

This certificate does not reflect meausrements for inside jaws, step height, or depth.

File No: PFS-101666-0119D0120-AH-DC-092

Temperature: 68.2°F Humidity: 41.6%

The equipment used in the verification of this instrument has been calibrated and is NIST traceable.
The uncertainty of calibration was estimated at the 95% confidence level, coverage factor (k=2).

Remarks:

This certificate of verification is issued as a statement of fact that on the date of verification the above instrument had an accuracy as indicated and was calibrated to meet the requirements of the manufacturer's specifications. This certificate should not be construed or regarded as a guarantee or warranty of any kind that the instrument will retain the same percentage of accuracy as determined on the date when the verification was performed and reported. Ad-Tek, Inc. hereby expressly disclaims any and all liability for damage or loss by all parties arising or resulting from deterioration, obsolescence, malfunction, subsequent calibration performed by another agency or substandard performance of said instrument.

This report and certificate of verification shall not be reproduced except in full, without the written approval of Ad-Tek, Inc.

Service Technician: Alisa Houser Date of Service: January 15, 2019

Technical Manager: Nicole Ostrowski Date Next Due: January 2020

We sincerely appreciate your business and thank you for selecting Advanced Calibration Technologies, Inc. for servicing your equipment.
To reschedule, please call (800) 259-5058. Thank You.

J-2000

owner's manual

DELMHORST®
INSTRUMENT CO.

WHEN ACCURACY IS THE POINT.™

ilac-MRA

A2LA ACCREDITED
A2LA Certificate No. 1750.01
Calibration

Calibration complies with ISO/IEC 17025, ANSI/NCSL Z540-1, and 9001

Cert. No.: 4198-9765787

Traceable® Certificate of Calibration for Hand Held Barometer

Customer :PFS TECO Suite 305 ,11785 SE Highway 212 ,Clackamas ,OR-97015 ,U.S.A.

Instrument Identification:

Model: 4198, S/N: 80531676 Manufacturer: Control Company

Standards/Equipment:

Description	Serial Number	Due Date	NIST Traceable Reference
Digital Barometer	D4540001	09 Oct 2018	1000415948
Digital Thermometer	111879345	09 Apr 2019	4000-9377595

Certificate Information:

Technician: 57 Procedure: CAL-32 Cal Date: 29 Aug 2018 Cal Due Date: 29 Aug 2019

Test Conditions: 62.73%RH 23.92°C 1018mBar

Calibration Data:

Unit(s)	Nominal	As Found	In Tol	Nominal	As Left	In Tol	Min	Max	±U	TUR
°C	24.10	24.1	Y	23.51	23.9	Y	22.01	25.01	0.05	>4:1
mb/hPa	551.55	552	Y	551.62	546	Y	544	560	0.62	>4:1
mb/hPa	751.22	744	Y	748.87	746	Y	741	757	0.62	>4:1
mb/hPa	1015.90	1011	Y	1018.22	1017	Y	1010	1026	0.62	>4:1

This certificate indicates Traceability to standards provided by (NIST) National Institute of Standards and Technology and/or a National Standards Laboratory.

A Test Uncertainty Ratio of at least 4:1 is maintained unless otherwise stated and is calculated using the expanded measurement uncertainty. Uncertainty evaluation includes the instrument under test and is calculated in accordance with the ISO "Guide to the Expression of Uncertainty in Measurement : (GUM). The uncertainty represents an expanded uncertainty using a coverage factor k=2 to approximate a 95% confidence level. In tolerance conditions are based on test results falling within specified limits with no reduction by the uncertainty of the measurement. The results contained herein relate only to the item calibrated. This certificate shall not be reproduced except in full, without written approval of Control Company.

Nominal=Standard's Reading; As Left=Instrument's Reading; In Tol=In Tolerance; Min/Max=Acceptance Range; ± U=Expanded Measurement Uncertainty; TUR=Test Uncertainty Ratio; Accuracy=±(Max-Min)/2; Min=As Left Nominal(Rounded) – Tolerance; Max= As Left Nominal(Rounded) + Tolerance;

Nicol Rodriguez

Nicol Rodriguez, Quality Manager

Aaron Judice. Technical Manager

Note :

Maintaining Accuracy:

In our opinion once calibrated your Hand Held Barometer should maintain its accuracy. There is no exact way to determine how long calibration will be maintained. Hand Held Barometer change little, if any at all, but can be affected by aging, temperature, shock, and contamination.

Recalibration:

For factory calibration and re-certification traceable to National Institute of Standards and Technology contact Control Company.

CONTROL COMPANY 12554 Galveston RD Suite B230 Webster TX USA 77598
Phone 281 482-1714 Fax 281 482-9448 sales@control3.com www.control3.com

Control Company is an ISO/IEC 17025:2005 Calibration Laboratory Accredited by (A2LA) American Association for Laboratory Accreditation, Certificate No. 1750.01.
Control Company is ISO 9001:2008 Quality Certified by DNV GL, Certificate No. CERT-01805-2006-AQ-HOU-RvA.
International Laboratory Accreditation Cooperation (ILAC) - Multilateral Recognition Arrangement (MRA).

Traceable® is a registered trademark of Control Company

© 2017 Control Company